NIST GCR 95-682

FIRES - T3 A COMPUTER PROGRAM FOR THE FIRE RESPONSE OF STRUCTURES -- THERMAL (THREE DIMENSIONAL VERSION)

R. Iding, B. Bresler, and
Z. Nizamuddin

United States Department of Commerce
Technology Administration
National Institute of Standards and Technology

NIST GCR 95-682

FIRES - T3 A COMPUTER PROGRAM FOR THE FIRE RESPONSE OF STRUCTURES -- THERMAL (THREE DIMENSIONAL VERSION)

R. Iding, B. Bresler, and
Z. Nizamuddin

Department of Civil Engineering
University of California, at Berkeley
Berkeley, CA

October 1977
Issued June 1996

U.S. Department of Commerce
Michael Kantor, *Secretary*
Technology Administration
Mary L. Good, *Under Secretary for Technology*
National Institute of Standards and Technology
Arati Prabhakar, *Director*

Notice

This report was prepared for the Building and Fire Research Laboratory of the National Institute of Standards and Technology under grant number NBS-G7-9006-10/77. The statement and conclusions contained in this report are those of the authors and do not necessarily reflect the views of the National Institute of Standards and Technology or the Building and Fire Research Laboratory.

FIRE RESEARCH GROUP
UNIVERSITY OF CALIFORNIA • BERKELEY

FIRES – T3

A COMPUTER PROGRAM FOR THE FIRE RESPONSE OF STRUCTURES – THERMAL

(THREE-DIMENSIONAL VERSION)

by

R. IDING
B. BRESLER
Z. NIZAMUDDIN

Department of Civil Engineering
Division of Structural Engineering and Structural Mechanics

RESEARCH SPONSORED BY:
NATIONAL SCIENCE FOUNDATION
and
NATIONAL BUREAU OF STANDARDS

REPORT NO. UCB FRG 77 - 15 • OCTOBER 1977

FIRE RESEARCH GROUP REPORT UCB FRG 77-15

F I R E S - T 3

A Computer Program for the
FIre REsponse of Structures - Thermal
Three - Dimensional Version

by
Robert H. Iding
Zuhayr Nizamuddin
Boris Bresler

This research was supported by
National Science Foundation Grant No. ERT70-01080 A05
(Formerly Grant No. GI-43)
and
National Bureau of Standards Grant No. NBS-G7-9006-10/77

Structural Engineering and Structural Mechanics
Department of Civil Engineering
University of California, Berkeley
October 1977

ABSTRACT

This report documents the computer program FIRES-T3 (FIre REsponse of Structures - Thermal - Three-Dimensional Version). The program evaluates the temperature distribution history of general three-dimensional solids or composites such as reinforced concrete subjected to fire environments. There are also options for two-dimensional and one-dimensional heat flow analyses. FIRES-T3 is based on a finite element formulation which considers the temperature dependence of thermal properties and the nonlinearities inherent in modeling the fire boundary condition. The finite element formulation, the idealization of the fire boundary condition, and the general numerical approach used in the program are discussed. Included in the report are appendices that provide input instructions for FIRES-T3, sample problems with listings of their input and output, and a complete Fortran listing of the computer program.

TABLE OF CONTENTS

ABSTRACT i

TABLE OF CONTENTS ii

1. INTRODUCTION 1

2. THERMAL MODEL AND SOLUTION PROCEDURE 2

   2.1 Heat Flow Equations 2
   2.2 Finite Element Matrix Equations 3
   2.3 Conductivity Matrix [K] 5
   2.4 Heat Capacity Matrix [C] 20
   2.5 External Heat Flow Vector {Q} 21
   2.6 Time Integration of Matrix Equations 24

3. COMMENTARY 35

ACKNOWLEDGEMENTS 38

REFERENCES 39

APPENDIX A - Input Instructions A-1

APPENDIX B - Sample Problems B-1

APPENDIX C - Listing of FIRES - T3 . . . . . C-1

1. INTRODUCTION

This report presents FIRES-T3, a computer program for the FIre REsponse of Structures - Thermal - Three-Dimensional Version, which evaluates the temperature distribution history of structures in fire environments. There are options for fully three-dimensional solids, two-dimensional cross-sections, and structures in which heat flow is one-dimensional. The program also permits the use of one-, two-, and three-dimensional elements together in the same structure. Structures may consist of one material or may be composites such as reinforced concrete. The temperature distributions generated by FIRES-T3 can be used in conjunction with stress analysis programs such as FIRES-RC II (a computer program for the response of Reinforced Concrete Frames [6]) or FIRES-SL (a computer program for the response of SLabs [7]), together providing an overall capability of predicting the response of structures subjected to fires.

The heat flow problem is modeled in FIRES-T3 by the heat conduction boundary value problem. These equations are nonlinear because of the temperature dependence of the thermal properties of structural materials and the heat transfer mechanisms associated with fire environments. The solution technique used in FIRE-T3 is a finite element method coupled with time step integration. This general approach has been presented in the work of Wilson [10,11] and Zienkiewicz [12,13] and extended to the fire situation by Bizri [3]. The nonlinearity of the problem requires an iterative solution process within each step. The element library includes isoparametric 8-node hexahedra and 4-node tetrahedra for three-dimensional solids, 4-node isoparametric quadrilaterals and triangles for two-dimensional modeling, and 2-node isoparametric bar elements for one-dimensional problems. Fire environments are represented by a linear model or a nonlinear model that includes both convective and radiative mechanisms.

In the report, the theoretical model and solution techniques are derived, the organization of the computer program is explained, and a commentary on practical aspects of using the program is made. The appendices contain fully annotated input instructions, sample problems with input and output, and a Fortran listing of the program.

2. THERMAL MODEL AND SOLUTION PROCEDURE

2.1 Heat Flow Equations

Three dimensional heat flow is governed by the following partial differential equation:

$$\rho C_p \frac{\partial T(x, y, z, t)}{\partial t} = \frac{\partial}{\partial x}\left(K \frac{\partial T(x, y, z, t)}{\partial x}\right) + \frac{\partial}{\partial y}\left(K \frac{\partial T(x, y, z, t)}{\partial y}\right) +$$

$$\frac{\partial}{\partial z}\left(K \frac{\partial T(x, y, z, t)}{\partial z}\right) + Q_{exo}(x, y, z, t) \qquad (2.1)$$

where

x, y, z	-	spatial coordinates
t	-	time
$T(x, y, z, t)$	-	temperature distribution history
ρ	-	density (temperature- and space-dependent)
C_p	-	specific heat (temperature- and space-dependent)
K	-	isotropic conductivity (temperature- and space-dependent)
Q_{exo}	-	internal heat generation rate (time- and space-dependent)

An integral part of the above equation is its boundary conditions and initial conditions. The initial conditions consist of the temperature of every point in the structure when the analysis begins, i.e.,

$$T(x, y, z, t_o) = T_o(x, y, z) \qquad (2.2)$$

where the temperature distribution T_o is specified. Boundary conditions must be defined at every point on the structure's surface and can be a specified temperature history or a specified heat flow history. The solution to the heat flow problem is the internal temperature history

that satisfies the field equations (2.1), the initial conditions (2.2), and the prescribed boundary conditions.

For the special case of two-dimensional heat flow, the governing equations are

$$\rho C_p \frac{\partial T(x, y, t)}{\partial t} = \frac{\partial}{\partial x}\left(K \frac{\partial T(x, y, t)}{\partial x}\right) + \frac{\partial}{\partial y}\left(K \frac{\partial T(x, y, t)}{\partial y}\right) + Q_{exo}(x, y, t) \quad (2.3)$$

with appropriate boundary conditions and initial conditions defined over a two-dimensional area.

One-dimensional heat flow is governed by the equation

$$\rho C_p \frac{\partial T(x, t)}{\partial t} = \frac{\partial}{\partial x}\left(K \frac{\partial T(x, t)}{\partial x}\right) + Q_{exo}(x, t) \quad (2.4)$$

Boundary conditions are defined by specifying a flow rate or temperature at each end of the one-dimensional domain.

2.2 Finite Element Matrix Equations

The heat flow equations for two- and three-dimensional bodies described above are very complex and in almost all cases have no closed-form solution; approximate numerical methods must be used in order to obtain a solution. In program FIRES-T3, a finite element method discretizes spacial variables and a step-by-step integration technique discretizes the time variable. The advantages of the finite element method are numerous. The method is completely general with respect to geometry and material properties; complex shapes composed of different materials (e.g. a reinforced concrete structure) are easily represented. Nonlinearity of material and boundary conditions can be treated by the finite element method quite economically. Most numerical methods convert the continuous governing differential or integral equations of heat transfer to a set of linear algebraic equations. However, in the finite element method, the linear equations produce a symmetric positive-definite matrix in banded form which is readily solved with a minimum of computer storage and time.

In the finite element method, the continuum over which Eq. (2.1) or Eq. (2.3) is defined is discretized into a finite number of elements connected at nodal points. The complex partial differential equation is transformed into a system of simultaneous first order differential equations, one at each node. This transformation is effected element by element as explained in the next three sections. The system of nodal equations is then solved by step-by-step integration over the time domain, as explained in Section 2.6.

The finite element equations can be visualized physically as nodal heat balance equations. That is, at each node in the discretization,

$$Q^s + Q^i = Q^e \tag{2.5}$$

where

Q^s = rate at which heat is stored within the elements adjacent to node; in steady state conditions, this term is zerc at all nodes

Q^i = rate of internal heat transfer by conduction in the elements adjacent to the node

Q^e = rate at which heat enters the node from an external source

or, in matrix form,

$$[C]\{\dot{T}\} + [K]\{T\} = \{Q\} \tag{2.6}$$

where

$[C]$ = Capacity matrix (temperature-dependent)

$[K]$ = Conductivity matrix (temperature-dependent)

$\{Q\}$ = External heat flow vector (depends on exothermic reactions and fire boundary conditions)

$\{T\}$ = Temperature vector (time-dependent)

$\{\dot{T}\}$ = Temperature time rate of change vector (time-dependent)

The derivation of the three terms of this equation (conductivity matrix, capacity matrix, and heat flow vector) are discussed in the next three sections.

2.3 Conductivity Matrix [K]

The terms of the conductivity matrix are associated with the rate of heat flow from the elements adjacent to each node. The conductivity matrix for the system being analyzed, $\underline{K}$, is assembled from element conductivity matrices, $\underline{K_m}$. That is:

$$\underline{K} = \sum_{m=1}^{M} \underline{K_m} \tag{2.7}$$

where m is the element number and M is the total number of elements. The development of the conductivity matrices for three-dimensional, two-dimensional, and one-dimensional isoparametric finite elements is presented below. Three-dimensional elements can be used only for a three-dimensional analysis. Two-dimensional elements can be used in a two-dimensional analysis or as a component in a three-dimensional analysis. The one-dimensional elements can be used in conjunction with two- and three-dimensional elements in a multidimensional analysis or by themselves to model one-dimensional heat flow.

2.3.1 Three-Dimensional Isoparametric Element

This element is called isoparametric because the geometry of the element and the assumed temperature distribution within the element are described in terms of the same ("iso") parameters (or shape functions) and are of the same order (linear in this case).

An eight node three-dimensional isoparametric element is shown in Fig. 2.1. The natural coordinates ($\bar{x}$, $\bar{y}$, $\bar{z}$) of the eight corner nodes are (± 1, ± 1, ± 1). A natural coordinate system is a local system which permits the specification of a point within the element by a set of

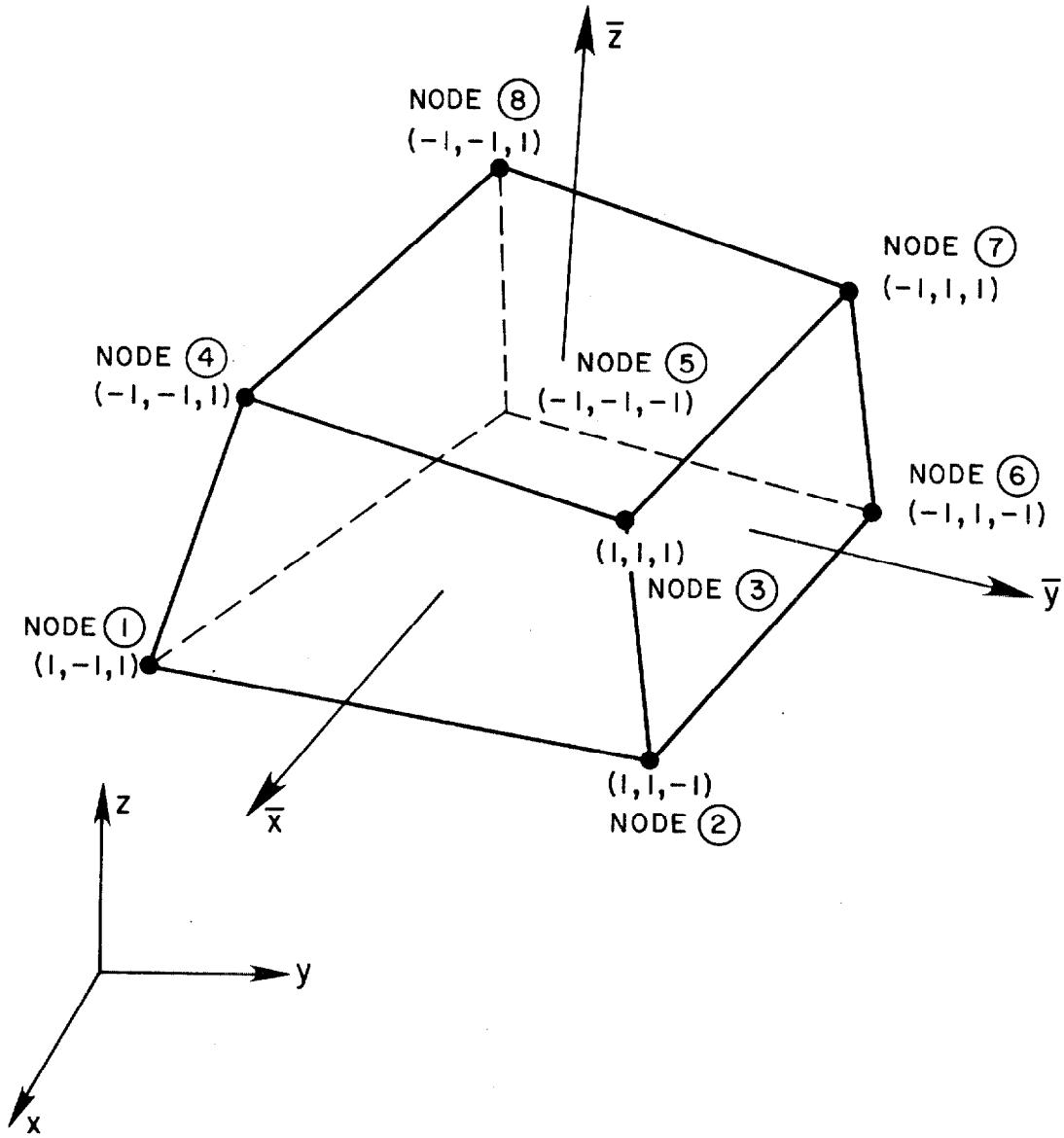

FIGURE 2.1 THREE-DIMENSIONAL ISOPARAMETRIC ELEMENT

dimensionless numbers whose magnitudes never exceed unity. This system is usually arranged so that the natural coordinates have unit magnitude at the nodal points of the element. Such a system simplifies the formulation and facilitates the numerical integration which is required to obtain element matrices. The symbols x, y, and z denote the global coordinate axes.

The temperature at any point within the element is expressed in the natural coordinate system $(\bar{x}, \bar{y}, \bar{z})$ in terms of the temperatures at nodes 1 to 8 by the following equation:

$$T(\bar{x}, \bar{y}, \bar{z}, t) = \sum_{i=1}^{8} H_i(\bar{x}, \bar{y}, \bar{z}) \cdot T_i(t) \tag{2.8a}$$

or, in matrix form:

$$\underset{1 \times 1}{T(\bar{x}, \bar{y}, \bar{z}, t)} = \underset{1 \times 8}{< H_i >} \; \underset{8 \times 1}{\{T_i\}} \tag{2.8b}$$

where

$$H_i(\bar{x}, \bar{y}, \bar{z}) = \frac{1}{8}(1 + \bar{x}\,\bar{x}_i)(1 + \bar{y}\,\bar{y}_i)(1 + \bar{z}\,\bar{z}_i) \tag{2.9}$$

(linear interpolation function)

$\bar{x}_i, \bar{y}_i, \bar{z}_i$ - natural coordinates of node i (either 1 or -1)

$T_i(t)$ - temperature of node i

$< H_i > \; = \; < H_1 \; H_2 \; . \; . \; . \; . \; H_8 >$

$\{T_i\}$ - column vector of nodal point temperatures

Similarly, the global coordinates of any point within the element are related to the global coordinates of the nodal points by the following equation:

$$\underset{3 \times 1}{\begin{Bmatrix} x \\ y \\ z \end{Bmatrix}} = \underset{3 \times 24}{\begin{bmatrix} < H_i > & 0 & 0 \\ 0 & < H_i > & 0 \\ 0 & 0 & < H_i > \end{bmatrix}} \underset{24 \times 1}{\begin{Bmatrix} \{x_i\} \\ \{y_i\} \\ \{z_i\} \end{Bmatrix}} \tag{2.10}$$

where

$$\{x_i\}^T = < x_1 \; x_2 \; . \; . \; . \; . \; . \; x_8 >$$

$$\{y_i\}^T = < y_1 \; y_2 \; . \; . \; . \; . \; . \; y_8 >$$

$$\{z_i\}^T = < z_1 \; z_2 \; . \; . \; . \; . \; . \; z_8 >$$

are the nodal point coordinates in global system.

When calculating the element conductivity matrix, an expression for temperature gradient within the element is needed. Differentiation of Eq. (2.8) with respect to spatial coordinates yields:

$$\underset{3 \times 1}{\begin{Bmatrix} \frac{\partial T}{\partial x} \\ \frac{\partial T}{\partial y} \\ \frac{\partial T}{\partial z} \end{Bmatrix}} = \underset{3 \times 8}{\begin{bmatrix} < \frac{\partial H_i}{\partial x} > \\ < \frac{\partial H_i}{\partial y} > \\ < \frac{\partial H_i}{\partial z} > \end{bmatrix}} \underset{8 \times 1}{\{T_i\}} = [B] \{T_i\} \tag{2.11}$$

The spatial derivatives in the natural and global coordinate systems are related by the following equation (using the chain rule of differentiation).

$$\underset{3 \times 1}{\begin{Bmatrix} \frac{\partial}{\partial \bar{x}} \\ \frac{\partial}{\partial \bar{y}} \\ \frac{\partial}{\partial \bar{z}} \end{Bmatrix}} = \underset{3 \times 3}{[J]} \underset{3 \times 1}{\begin{Bmatrix} \frac{\partial}{\partial x} \\ \frac{\partial}{\partial y} \\ \frac{\partial}{\partial z} \end{Bmatrix}} \tag{2.12}$$

where

$$[J] = \begin{bmatrix} \frac{\partial x}{\partial \bar{x}} & \frac{\partial y}{\partial \bar{x}} & \frac{\partial z}{\partial \bar{x}} \\ \frac{\partial x}{\partial \bar{y}} & \frac{\partial y}{\partial \bar{y}} & \frac{\partial z}{\partial \bar{y}} \\ \frac{\partial x}{\partial \bar{z}} & \frac{\partial y}{\partial \bar{z}} & \frac{\partial z}{\partial \bar{z}} \end{bmatrix} \tag{2.13}$$

is the Jacobian matrix. From Eq. (2.10) it can be shown that:

$$[J] = \underset{3 \times 8}{\begin{bmatrix} \frac{\partial H_1}{\partial \bar{x}} & \frac{\partial H_2}{\partial \bar{x}} & \cdots & \frac{\partial H_8}{\partial \bar{x}} \\ \frac{\partial H_1}{\partial \bar{y}} & \frac{\partial H_2}{\partial \bar{y}} & \cdots & \frac{\partial H_8}{\partial \bar{y}} \\ \frac{\partial H_1}{\partial \bar{z}} & \frac{\partial H_2}{\partial \bar{z}} & \cdots & \frac{\partial H_8}{\partial \bar{z}} \end{bmatrix}} \underset{8 \times 3}{\begin{bmatrix} x_1 & y_1 & z_1 \\ x_2 & y_2 & z_2 \\ \cdot & \cdot & \cdot \\ \cdot & \cdot & \cdot \\ \cdot & \cdot & \cdot \\ \cdot & \cdot & \cdot \\ x_8 & y_8 & z_8 \end{bmatrix}} \tag{2.14}$$

Finally, using Eq. (2.12) in Eq. (2.11), one obtains

$$[B] = \underset{3 \times 8}{\begin{bmatrix} < \frac{\partial H_i}{\partial x} > \\ < \frac{\partial H_i}{\partial y} > \\ < \frac{\partial H_i}{\partial z} > \end{bmatrix}} = \underset{3 \times 3}{[J]^{-1}} \underset{3 \times 8}{\begin{bmatrix} < \frac{\partial H_i}{\partial \bar{x}} > \\ < \frac{\partial H_i}{\partial \bar{y}} > \\ < \frac{\partial H_i}{\partial \bar{z}} > \end{bmatrix}} \tag{2.15}$$

Using the virtual work principle, it can be shown that the element conductivity matrix is given by [12]

$$\underset{8\times8}{\underline{K_m}} = \int_{Vol.} \underset{8\times3}{\underline{B}^T} \; \underset{3\times3}{\underline{k_m}} \; \underset{3\times8}{\underline{B}} \; dv \tag{2.16}$$

in which $\underline{k_m}$ is the material thermal conductivity tensor of the element. For isotropic conductivity, the above equation reduces to

$$\underset{8\times8}{\underline{K_m}} = \int_{Vol.} k_m \; \underset{8\times3}{\underline{B}^T} \; \underset{3\times8}{\underline{B}} \; dv \tag{2.17}$$

Note that [12]

$$dv = dx \cdot dy \cdot dz = |J| \; d\bar{x} \cdot d\bar{y} \cdot d\bar{z} \tag{2.18}$$

where $|J|$ is the Jacobian (determinant of [J]). By making a change in coordinates to the natural coordinate system, Eq. (2.17) becomes:

$$\underset{8\times8}{\underline{K_m}} = \int_{-1}^{+1}\int_{-1}^{+1}\int_{-1}^{+1} k_m \; \underset{8\times3}{\underline{B}^T} \; \underset{3\times8}{\underline{B}} \; |J| \; d\bar{x} \; d\bar{y} \; d\bar{z} \tag{2.19}$$

If k_m is constant throughout the element, the above integral reduces to

$$\underset{8\times8}{\underline{K_m}} = k_m \int_{-1}^{+1}\int_{-1}^{+1}\int_{-1}^{+1} \underset{8\times8}{\underline{f}} (\bar{x}, \bar{y}, \bar{z}) \; d\bar{x} \; d\bar{y} \; d\bar{z} \tag{2.20}$$

where

$$\underset{8\times8}{\underline{f}} (\bar{x}, \bar{y}, \bar{z}) = \underset{8\times3}{\underline{B}^T} \; \underset{3\times8}{\underline{B}} \; |J|$$

It is impractical to integrate expression (2.20) in closed form, and approximate numerical integration methods must be used [11,12]. Although there are several numerical integration schemes available, Gauss quadrature is used in FIRES-T3. Using Gauss' Formula, expression (2.20) is evaluated as follows:

$$\int_{-1}^{+1}\int_{-1}^{+1}\int_{-1}^{+1} \underset{8x8}{\underline{f}}(\bar{x}, \bar{y}, \bar{z})\, d\bar{x}\, d\bar{y}\, d\bar{z} = \sum_{i=1}^{I}\sum_{j=1}^{J}\sum_{n=1}^{N} W_i\, W_j\, W_n\, \underset{8x8}{\underline{f}}(\bar{x}_i, \bar{y}_j, \bar{z}_n) \tag{2.22}$$

where

I, J, N	-	number of integration points in directions $\bar{x}, \bar{y}, \bar{z}$, respectively
$\bar{x}_i, \bar{y}_j, \bar{z}_n$	-	coordinates of integration points
W_i, W_j, W_n	-	weight functions

Values of the coordinates and weight functions for various values of the number of integration points are tabulated in Reference 12 and in other texts on numerical methods. In FIRES-T3 the number of integration points is taken equal to two in each direction, yielding a total of eight integration points within the element. That is:

$$I = J = N = 2$$

Then, from appropriate tables [12], it is found that

$$\bar{x}_i, \bar{y}_j, \bar{z}_n = \pm\frac{\sqrt{3}}{3}, \pm\frac{\sqrt{3}}{3}, \pm\frac{\sqrt{3}}{3}$$

and

$$W_i, W_j, W_n = 1, 1, 1$$

The computational scheme proceeds as follows. First, the spatial derivatives of $< H_i >$ are evaluated at integration point $(\bar{x}_i, \bar{y}_j, \bar{z}_n)$.

Then these derivatives are used in Eq. (2.14), along with the known global coordinates, $(x_1, \ldots, x_8)$, $(y_1, \ldots, y_8)$ and $(z_1, \ldots, z_8)$ of the element corners, to obtain the Jacobian matrix $\underline{J}(\bar{x}_i, \bar{y}_j, \bar{z}_n)$ at point $(\bar{x}_i, \bar{y}_j, \bar{z}_n)$. This matrix is inverted and used in Eq. (2.15), along with the spatial derivatives of $< H_i >$ at point $(\bar{x}_i, \bar{y}_j, \bar{z}_n)$, to obtain the matrix $\underline{B}(\bar{x}_i, \bar{y}_j, \bar{z}_n)$. Finally, the determinant of the Jacobian $|\underline{J}(\bar{x}_i, \bar{y}_j, \bar{z}_n)|$ is calculated and used together with $\underline{B}(\bar{x}_i, \bar{y}_j, \bar{z}_n)$ in Eq. (2.21) to obtain:

$$\underset{8\times8}{\underline{f}}\,(\bar{x}_i, \bar{y}_j, \bar{z}_n) = \underset{8\times3}{\underline{B}^T}\,(\bar{x}_i, \bar{y}_j, \bar{z}_n)\ \underset{3\times8}{\underline{B}}\,(\bar{x}_i, \bar{y}_j, \bar{z}_n)\ |\underline{J}\,(\bar{x}_i, \bar{y}_j, \bar{z}_n)| \qquad (2.23)$$

Equation (2.23) is evaluated at the eight integration points and added in Eq. (2.22) to get a total value for the integral. Substitution into Eq. (2.20) completes the derivation of element conductivity.

2.3.2 Two-Dimensional Isoparametric Element

The two-dimensional isoparametric element is very similar to the three-dimensional element, so the derivation below is brief to avoid redundancy.

A typical four node two-dimensional isoparametric element is shown in Fig. 2.2. The natural coordinates $(\bar{x}, \bar{y})$ of the four corner nodes are $(\pm1, \pm1)$. Global coordinates are denoted by x and y.

The temperature at any point within the element is expressed in the natural coordinate system $(\bar{x}, \bar{y})$ in terms of the temperatures at nodes 1 to 4 by the following equation:

$$T(\bar{x}, \bar{y}, t) = \sum_{i=1}^{4} H_i(x, y) \cdot T_i(t) \qquad (2.24a)$$

or, in matrix form

$$\underset{1\times1}{T(\bar{x}, \bar{y}, t)} = \underset{1\times4}{< H_i >}\ \underset{4\times1}{\{T_i\}} \qquad (2.24b)$$

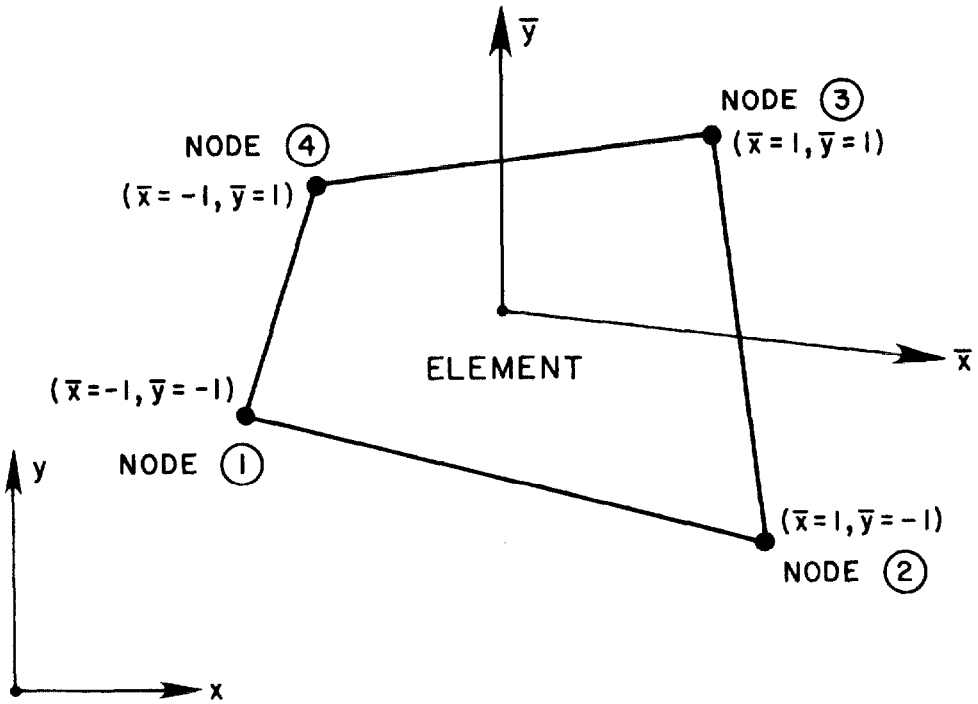

FIGURE 2.2 TWO-DIMENSIONAL ISOPARAMETRIC ELEMENT

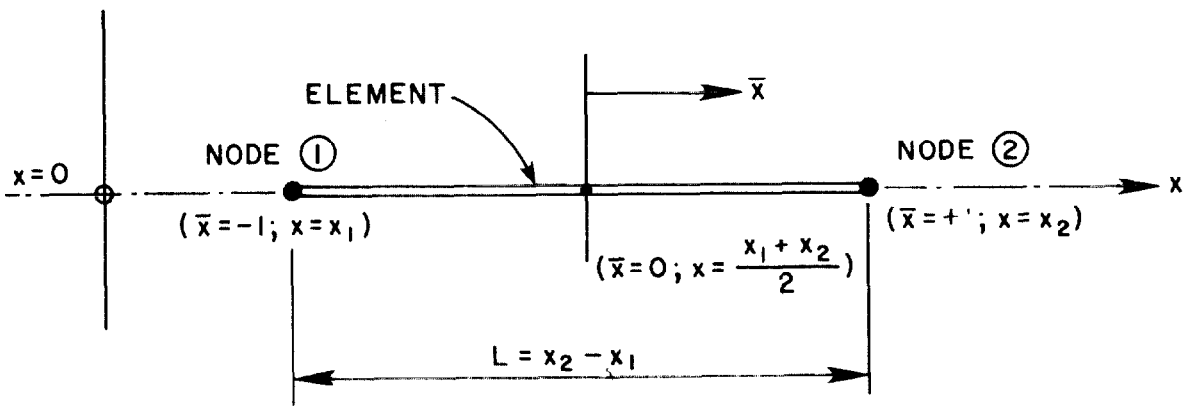

FIGURE 2.3 ONE-DIMENSIONAL ISOPARAMETRIC ELEMENT

where

$$H_i(\bar{x}, \bar{y}) = \frac{1}{4}(1 + \bar{x}\,\bar{x}_i)(1 + \bar{y}\,\bar{y}_i) \tag{2.25}$$

(linear interpolation function)

$\bar{x}_i, \bar{y}_i$	-	natural coordinates of node i (either 1 or -1)
$T_i(t)$	-	temperature of node i
$< H_i >$	-	$< H_1\ H_2\ H_3\ H_4 >$
$\{ T_i \}$	-	column vector of nodal point temperatures

Similarly, the global coordinates of any point within the element are related to the global coordinates of the nodal points by the following equation:

$$\underset{2\times 1}{\begin{Bmatrix} x \\ y \end{Bmatrix}} = \underset{2\times 8}{\begin{bmatrix} < H_i > & 0 \\ 0 & < H_i > \end{bmatrix}} \underset{8\times 1}{\begin{Bmatrix} \{x_i\} \\ \{y_i\} \end{Bmatrix}} \tag{2.26}$$

where

$$\{x_i\}^T = < x_1\ x_2\ x_3\ x_4 >$$

$$\{y_i\}^T = < y_1\ y_2\ y_3\ y_4 >$$

are the nodal point coordinates.

Differentiation of Eq. (2.24) with respect to spatial coordinates yields:

$$\underset{2\times 1}{\begin{Bmatrix} \frac{\partial T}{\partial x} \\ \frac{\partial T}{\partial y} \end{Bmatrix}} = \underset{2\times 4}{\begin{bmatrix} < \frac{\partial H_i}{\partial x} > \\ < \frac{\partial H_i}{\partial y} > \end{bmatrix}} \underset{4\times 1}{\{T_i\}} = [B]\,\{T_i\} \tag{2.27}$$

The relationship between spatial and natural derivatives is

$$\begin{Bmatrix} \dfrac{\partial}{\partial \bar{x}} \\ \\ \dfrac{\partial}{\partial \bar{y}} \end{Bmatrix} = [J] \begin{Bmatrix} \dfrac{\partial}{\partial x} \\ \\ \dfrac{\partial}{\partial y} \end{Bmatrix} \tag{2.28}$$

$$2 \times 1 \qquad 2 \times 2 \quad 2 \times 1$$

where

$$[J] = \begin{bmatrix} \dfrac{\partial x}{\partial \bar{x}} & \dfrac{\partial y}{\partial \bar{x}} \\ \\ \dfrac{\partial x}{\partial \bar{y}} & \dfrac{\partial y}{\partial \bar{y}} \end{bmatrix} \tag{2.29}$$

is the Jacobian matrix. From Eq. (2.26) it can be shown that

$$\underset{2 \times 2}{[J]} = \underset{2 \times 4}{\begin{bmatrix} \dfrac{\partial H_1}{\partial \bar{x}} & \dfrac{\partial H_2}{\partial \bar{x}} & \dfrac{\partial H_3}{\partial \bar{x}} & \dfrac{\partial H_4}{\partial \bar{x}} \\ \\ \dfrac{\partial H_1}{\partial \bar{y}} & \dfrac{\partial H_2}{\partial \bar{y}} & \dfrac{\partial H_3}{\partial \bar{y}} & \dfrac{\partial H_4}{\partial \bar{y}} \end{bmatrix}} \underset{4 \times 2}{\begin{bmatrix} x_1 & y_1 \\ x_2 & y_2 \\ x_3 & y_3 \\ x_4 & y_4 \end{bmatrix}} \tag{2.30}$$

Use of Eq. (2.28) in Eq. (2.27) yields

$$\underset{2 \times 4}{[B]} = \underset{2 \times 4}{\begin{bmatrix} \left\langle \dfrac{\partial H_i}{\partial x} \right\rangle \\ \\ \left\langle \dfrac{\partial H_i}{\partial y} \right\rangle \end{bmatrix}} = \underset{2 \times 2}{[J]^{-1}} \underset{2 \times 4}{\begin{bmatrix} \left\langle \dfrac{\partial H_i}{\partial \bar{x}} \right\rangle \\ \\ \left\langle \dfrac{\partial H_i}{\partial \bar{y}} \right\rangle \end{bmatrix}} \tag{2.31}$$

The element conductivity matrix is given by

$$\underset{4x4}{\underline{K_m}} = \int_{Vol.} k_m \underset{4x2}{\underline{B^T}} \underset{2x4}{\underline{B}} \, dv \tag{2.32}$$

or integrating in the natural coordinate system

$$\underset{4x4}{\underline{K_m}} = t \int_{-1}^{+1} \int_{-1}^{+1} k_m \underset{4x2}{\underline{B^T}} \underset{2x4}{\underline{B}} \, |J| \, d\bar{x} \, d\bar{y} \tag{2.33}$$

where

t	-	-	thickness of element
$\|J\|$	-	-	determinant of Jacobian

If k_m is constant throughout the element, the above integral reduces to

$$\underset{4x4}{\underline{K_m}} = k_m \, t \int_{-1}^{+1} \int_{-1}^{+1} \underset{4x4}{\underline{f}} (\bar{x}, \bar{y}) \, d\bar{x} \, d\bar{y} \tag{2.34}$$

where

$$\underset{4x4}{\underline{f}} (\bar{x}, \bar{y}) = \underset{4x2}{\underline{B^T}} \underset{2x4}{\underline{B}} \, |J| \tag{2.35}$$

Numerical integration of Eq. (2.34) by 2-point Gauss quadrature gives the following equation:

$$\int_{-1}^{+1} \int_{-1}^{+1} \underset{4x4}{\underline{f}} (\bar{x}, \bar{y}) \, d\bar{x} \, d\bar{y} = \sum_{i=1}^{2} \sum_{j=1}^{2} \underset{4x4}{\underline{f}} (\bar{x}_i, \bar{y}_j) \tag{2.36}$$

where

$\bar{x}_i, \bar{y}_j$	-	coordinates of integration points either $+\sqrt{3}/3$ or $-\sqrt{3}/3$

The computational scheme is as follows. First, spatial derivatives of $< H_i >$ are evaluated at integration point $(\bar{x}_i, \bar{y}_i)$. Then these derivatives are used in Eq. (2.30), along with the known global coordinates, (x_1, x_2, x_3, x_4) and (y_1, y_2, y_3, y_4), of the element corners, to obtain the Jacobian matrix $\underline{J}\ (\bar{x}_i, \bar{y}_i)$ at the integration point $(\bar{x}_i, \bar{y}_i)$. This matrix is inverted and used in Eq. (2.31) along with the spatial derivatives of $< H_i >$ at point $(\bar{x}_i, \bar{y}_i)$, to obtain the matrix $\underline{B}\ (\bar{x}_i, \bar{y}_i)$. Finally, the determinant of the Jacobian $|\underline{J}\ (\bar{x}_i, \bar{y}_i)|$ is calculated and used together with $\underline{B}\ (\bar{x}_i, \bar{y}_i)$ in Eq. (2.35) to obtain

$$\underset{4x4}{\underline{f}\ (\bar{x}_i, \bar{y}_i)} = \underset{4x2}{\underline{B}^T\ (\bar{x}_i, \bar{y}_i)}\ \underset{2x4}{\underline{B}\ (\bar{x}_i, \bar{y}_i)}\ |J(\bar{x}_i, \bar{y}_i)| \tag{2.37}$$

Equation (2.37) is evaluated at the four integration points to determine the total value of the integral in Eq. (2.36). Substitution into Eq. (2.34) completes the formation of the two-dimensional element stiffness matrix.

2.3.3 One-Dimensional Isoparametric Element

A two node one-dimensional isoparametric element is shown in Fig. 2.3. The natural coordinates, $\bar{x}$, of the two nodes are ± 1. The x-axis represents the global coordinate system for the element.

The temperature at any point within the element is expressed in the natural coordinate system $(\bar{x})$ in terms of the temperature at nodes 1 and 2 by the following equation:

$$T(\bar{x}, t) = \sum_{i=1}^{2} H_i(\bar{x}) \cdot T_i(t) \tag{2.38a}$$

or in matrix form

$$\underset{1x1}{T(\bar{x}, t)} = \underset{1x2}{< H_i >}\ \underset{2x1}{\{T_i\}} \tag{2.38b}$$

where

$$H_i(\bar{x}) = \frac{1}{2}(1 + \bar{x}\ \bar{x}_i) \tag{2.39}$$

(linear interpolation function)

$\bar{x}_i$	-	natural coordinates of node i (either 1 or -1)
$T_i(t)$	-	temperature of node i
$< H_i >$	=	$< H_1 \; H_2 >$
$\{T_i\}$	-	column vector of nodal point temperatures

Similarly, the global coordinate of any point within the element is related to the global coordinates of the nodal points by the following equation:

$$\underset{1x1}{x} = \underset{1x2}{< H_i >} \underset{2x1}{\{x_i\}} \tag{2.40}$$

where

$$\{x_i\}^T = < x_1 \; x_2 >$$

Differentiation of Eq. (2.38) with respect to x yields:

$$\frac{\partial T}{\partial x} = \underset{1x2}{< \frac{\partial H_i}{\partial x} >} \underset{2x1}{\{T_i\}} = \underset{1x2}{[B]} \underset{2x1}{\{T_i\}} \tag{2.41}$$

Similar to the three-dimensional case, one obtains:

$$\frac{\partial}{\partial \bar{x}} = \frac{\partial x}{\partial \bar{x}} \frac{\partial}{\partial x} = J \frac{\partial}{\partial x} \tag{2.42}$$

where

$$J = \frac{\partial x}{\partial \bar{x}} \tag{2.43}$$

is the Jacobian. From Eq. (2.40) it can easily be shown that:

$$\frac{\partial x}{\partial \bar{x}} = \frac{\partial H_1}{\partial \bar{x}} x_1 + \frac{\partial H_2}{\partial \bar{x}} x_2 = -\frac{1}{2} x_1 + \frac{1}{2} x_2 = \frac{L}{2} \tag{2.44}$$

where L is the length of the element.

Use of Eq. (2.42) in Eq. (2.41) yields:

$$[B] = \left\langle \frac{\partial H_1}{\partial x} \right\rangle = J^{-1} \left\langle \frac{\partial H_i}{\partial \bar{x}} \right\rangle = \frac{2}{L} \left\langle \frac{-1}{2} \ \frac{1}{2} \right\rangle = \left\langle \frac{-1}{L} \ \frac{1}{L} \right\rangle \tag{2.45}$$

Finally, the element conductivity matrix is given by:

$$\underset{2x2}{\underline{K_m}} = \int_{Vol.} \underset{2x1}{\underline{B^T}} \ \underset{1x1}{\underline{k_m}} \ \underset{1x2}{\underline{B}} \ dv = \int_{Vol.} k_m \begin{Bmatrix} \frac{-1}{L} \\ \frac{1}{L} \end{Bmatrix} \left\langle \frac{-1}{L} \ \frac{1}{L} \right\rangle dv \tag{2.46}$$

Since in this case all the terms under the integration sign are constant, there is no need for numerical integration and the integral can be evaluated explicitly as follows:

$$\begin{aligned} \underline{K_m} &= k_m \begin{Bmatrix} \frac{-1}{L} \\ \frac{1}{L} \end{Bmatrix} \left\langle \frac{-1}{L} \ \frac{1}{L} \right\rangle \int_{Vol.} dv \\ &= k_m \begin{Bmatrix} \frac{-1}{L} \\ \frac{1}{L} \end{Bmatrix} \left\langle \frac{-1}{L} \ \frac{1}{L} \right\rangle \cdot A \cdot L \\ &= \frac{k_m \cdot A}{L} \begin{bmatrix} 1 & -1 \\ -1 & 1 \end{bmatrix} \end{aligned} \tag{2.47}$$

where A is the area of the cross-section of the element.

2.4 Capacity Matrix [C]

The heat capacity associated with a node is the rate at which heat is absorbed for a unit rate of change of the temperature of that node. The capacity matrix is idealized through a system analogous to the lumping of mass in dynamic analysis. This approach has the important advantage of resulting in a diagonal capacity matrix. This lumping is achieved by delineating the volume adjacent to a node by a perimeter drawn through the centroids of the surrounding elements. Thus, the volume tributary to a node is found by adding a contribution from each element bounding the node, calculated as follows:

A. Three-Dimensional Isoparametric Element

The contribution of an element, m, to a node, i, is given as :

$$C_{m,i} = \frac{1}{8} V_m \rho(T) C_p(T) \tag{2.48}$$

where V_m is the volume of element adjacent to node i.

B. Two-Dimensional Isoparametric Element

The contribution of an element, m, to a node, i, is given as:

$$C_{m,i} = \frac{1}{4} V_m \rho(T) C_p(T) \tag{2.49}$$

where $V_m = t \cdot A$ is the volume of element adjacent to node i. A is the area and t is the thickness of the quadrilateral element.

C. One-Dimensional Isoparametric Element

The contribution of an element, m, to a node, i, is given as:

$$C_{m,i} = \frac{1}{2} V_m \rho(T) C_p(T) \tag{2.50}$$

where $V_m = A \cdot L$ is the volume of element adjacent to node i.

Therefore, the heat capacity of node i is

$$C_i = \sum_{m=1}^{M} C_{m,i} \tag{2.51}$$

where

M - all elements adjacent to node i

Finally, the diagonal system capacity matrix $\underline{C}$ is assembled by repeating the above calculation for each node.

2.5 External Heat Flow Vector {Q}

The external heat flow vector term in the matrix equations (2.6) can be separated into its constituent parts as follows:

$$Q = Q_F + Q_p + Q_E \tag{2.52}$$

where

Q_F	-	heat flow caused by the exposure of the system to an external source (e.g., a fire) on the boundary
Q_p	-	a prescribed heat flow on the boundary
Q_E	-	heat flow from an exothermic reaction within the system (e.g., concrete hydration, wood combustion)

Each of these three terms is calculated individually in FIRES-T3 as follows:

A. Convection and Radiation Boundary Conditions

The term Q_F is considered a function of both convective and radiative mechanisms. Fires normally affecting structures are here considered to be those in a post-flashover phase, which leads to the assumption of a uniform room temperature. The time-temperature relationship for a fire is represented by the function $T_f(t)$. It must realized that this temperature is at best a pseudo-representation of a very complex phenomenon.

The boundary of the system exposed to fire is assumed to be composed of surfaces bounding adjacent nodes. Thus, the external heat flow for a node can be represented by:

$$Q_F = A_F \cdot q(T_s, T_f) \tag{2.53}$$

where

A_F	-	tributary area for the node
q	-	rate of heat flow per unit area
T_s	-	surface temperature
T_f	-	temperature of pseudo-fire

The value of Q_F for a surface node exposed to fire is assembled by considering the contributions of surrounding surfaces.

The rate of heat flow can be modeled linearly or nonlinearly:

1. Linear heat transfer for fire:

$$q = h(T')(T_f - T_s) \tag{2.54}$$

where

$h(T')$	-	heat transfer coefficient
T'	=	$(T_f + T_s)/2$

2. Nonlinear heat transfer from fire:

$$q = A(T_f - T_s)^N + V \cdot \sigma[a\varepsilon_f\theta_f^4 - \varepsilon_s\theta_s^4] \tag{2.55}$$

where

A	-	convection coefficient
N	-	convection power factor
V	-	radiation view factor
σ	-	Stefan-Boltzmann constant
a	-	absorption of surface

ε_f	-	emissivity of the flame associated with fire
θ_f	-	absolute temperature of fire
ε_s	-	surface emissivity
θ_s	-	absolute temperature of surface

B. Prescribed Heat Flow Boundary Condition

In this case, the prescibed heat flow at the nodes at different times, Q_p, are input directly to the computer program FIRES-T3.

C. Internal Heat Generation due to Exothermic Reaction

The heat flow at each node due to internal heat generation, Q_E, is assembled by considering the contribution of each element bounding the node, i.e.,

$$Q_{E,i} = \sum_{m=1}^{M} q_m(V, t)\, V_{m,i} \tag{2.56}$$

where

$Q_{E,i}$	=	internal heat flow at node i
M	=	all elements adjacent to node i which generate heat
$q_m(V, t)$	=	heat generation per unit volume in element m (time-dependent)
$V_{m,i}$	=	portion of volume of element m that is tributary to node i
	=	$\frac{1}{8} V_m$ for three-dimensional elements
	=	$\frac{1}{4} V_m$ for two-dimensional elements
	=	$\frac{1}{2} V_m$ for one-dimensional elements

In FIRES-T3, the heat rate function $q_m(V, t)$ is input directly. Cooling is indicated by a negative sign.

2.6 Time Integration of Matrix Equations

The unknown nodal temperature vector, $\{T\}$, in the matrix equation (2.6) is a function of time, $\{T(t)\}$. Hence, this equation is actually a first order differential equation in n dimensions and must be further discretized by step-by-step integration. The continuous nodal temperature history $\{T(t)\}$ is represented by a finite sequence of temperature distributions $\{T(t_0)\}$, $\{T(t_1)\}$, $\{T(t_2)\}$, . . . By assuming that the variation of the temperature with time is linear within each time step (Fig. 2.4), the temperature rate of change $\{\dot{T}\}$ at any time t_i can be approximated in terms of nodal temperatures:

$$\{\dot{T}(t_i)\} = \{T(t_i) - T(t_{i-1})\}/\Delta t_i \tag{2.57}$$

where Δt_i is the time step between t_{i-1} and t_i. The differential equations (2.6) can now be reduced to a set of linear algebraic equations in the independent variable $\{T(t_i)\}$. There will be a set of equations for each time t_i, i = 1, 2, . . ., and the step-by-step solution of each set results in an approximation to the nodal temperature history $\{T(t)\}$ and, using Equations (2.8), (2.24) or (2.38), an approximation to the overall temperature distribution history T(x, y, x, t), T(x, y, t) or T(x, t). The accuracy of this finite element step-by-step integration approximation increases with the number of elements and with the smallness of time steps.

To facilitate discussion of the solution scheme and the incorporation of boundary conditions into the equations, let Eq. (2.6) be partitioned in the following form:

$$\left[\begin{array}{c|c} C_{aa} & 0 \\ \hline 0 & C_{bb} \end{array}\right] \left\{\begin{array}{c} \dot{T}_a(t_i) \\ \hline \dot{T}_b(t_i) \end{array}\right\} + \left[\begin{array}{c|c} K_{aa} & K_{bb} \\ \hline K_{ba} & K_{bb} \end{array}\right] \left\{\begin{array}{c} T_a(t_i) \\ \hline T_b(t_i) \end{array}\right\} = \left\{\begin{array}{c} Q_a(t_i) \\ \hline Q_b(t_i) \end{array}\right\} \tag{2.58}$$

where

T_a	-	unknown nodal temperatures
T_b	-	known (prescribed) nodal temperatures

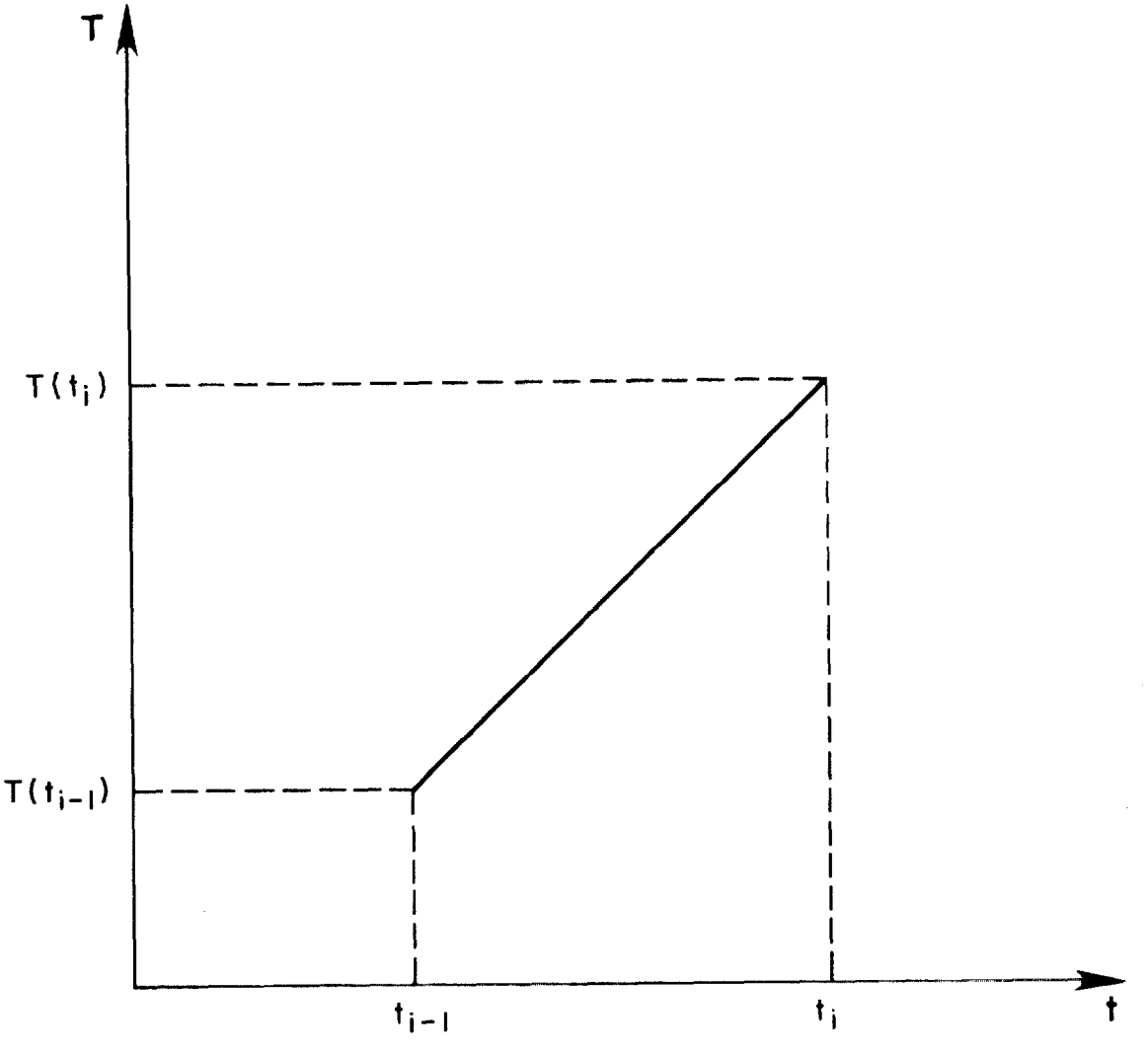

FIGURE 2.4 VARIATION OF TEMPERATURE WITH TIME WITHIN A TIME INCREMENT

Q_a	-	known external nodal heat flow
Q_b	-	unknown nodal heat flow

Static condensation can be used to remove known temperature nodes from the equations, resulting in:

$$[C_{aa}]\{\dot{T}_a(t_i)\} + [K_{aa}]\{T_a(t_i)\} = \{Q_a(t_i)\} - [K_{ab}]\{T_b(t_i)\} \qquad (2.59)$$

Substitution of Eq. (2.57) into Eq. (2.59) yields:

$$[K_{aa} + \frac{C_{aa}}{\Delta t_i}]\{T_a(t_i)\} = \{Q_a(t_i) - [K_{ab}]\{T_b(t_i)\} + \frac{C_{aa}}{\Delta t_i}\{T_a(t_{i-1})\}\} \qquad (2.60a)$$

or in compact form

$$[K]^*\{T_a(t_i)\} = \{Q(t_i)\}^* \qquad (2.60b)$$

where

$[K]^*$	-	effective conductivity matrix
$\{Q(t_i)\}^*$	-	effective heat flow vector

The nodal temperatures at t_i, $T(t_i)$, are found directly by solving the above set of linear algebraic equations.

Both $\underline{K}^*$ and $\underline{Q}^*$ can be functions of the current temperature $\underline{T}(t_i)$, since material properties and fire boundary conditions can be temperature-dependent. There are two basic approaches that can be used to resolve this problem.

1. Use the temperature distribution from the previous time step, $\underline{T}(t_{i-1})$, to calculate the necessary values and thus solve Eq. (2.60) directly, or
2. Use an iterative solution technique that allows the necessary variables to be continually revised on the basis of the current solution.

The type of numerical solution technique often used in solving linear algebraic equations - i.e. triangularization of $\underline{K}^*$ and then the back substitution of $\underline{Q}^*$ in order to obtain $\underline{T}(t_i)$ - offers an additional variation on the previously mentioned options. It is possible to derive $\underline{K}^*$ on the basis of the previous temperature distribution, triangularize $\underline{K}^*$, and then, with the use of an iterative technique, achieve a more accurate temperature vector in the determination of $\underline{Q}^*$. This separation into triangularization and back substitution is ideal for use in simulating fire phenomena since $\underline{Q}^*$ is extremely sensitive to the surface temperature of the structure. The effective conductivity matrix $\underline{K}^*$ tends to be far less sensitive to temperature than $\underline{Q}^*$. FIRES-T3 contains the option of either solving the entire problem ($\underline{K}^*$ and $\underline{Q}^*$) iteratively, or considering only the fire boundary condition term ($\underline{Q}^*$) in the iteration.

To help accelerate convergence in the iterative processes, an overconvergence factor, β, is used in estimating the temperature distribution of the next iteration, j + 1.

$$\underline{T}^{j+1}(t_i) = \underline{T}^{j}(t_i) + \beta\,(\underline{T}^{j}(t_i) - \underline{T}^{j-1}(t_i)) \tag{2.61}$$

Experience has shown that β should vary from -0.10 to -0.40 in the case of the nonlinear fire condition. Convergence is achieved when the temperature distribution of two successive iterations coincide within a prescribed level of error expressed as

$$\frac{2 \cdot |\, T^{j}(t_i) - T^{j-1}(t_i)\,|}{|\, T^{j}(t_i) + T^{j-1}(t_i)\,|} < \text{permissible error} \tag{2.62}$$

The step-by-step assembly and solution of Eq. (2.60) gradually traces out the temperature history in the structure.

The structure of FIRES-T3 is shown in the following flow charts. Fig. 2.5 shows the organization of the main subroutine (FIRES-T3) which inputs the data describing the problem. The subroutine which controls step-by-step integration (HEATFLO) is presented in Fig. 2.6.

An important feature of FIRES-T3 is that all system variables are

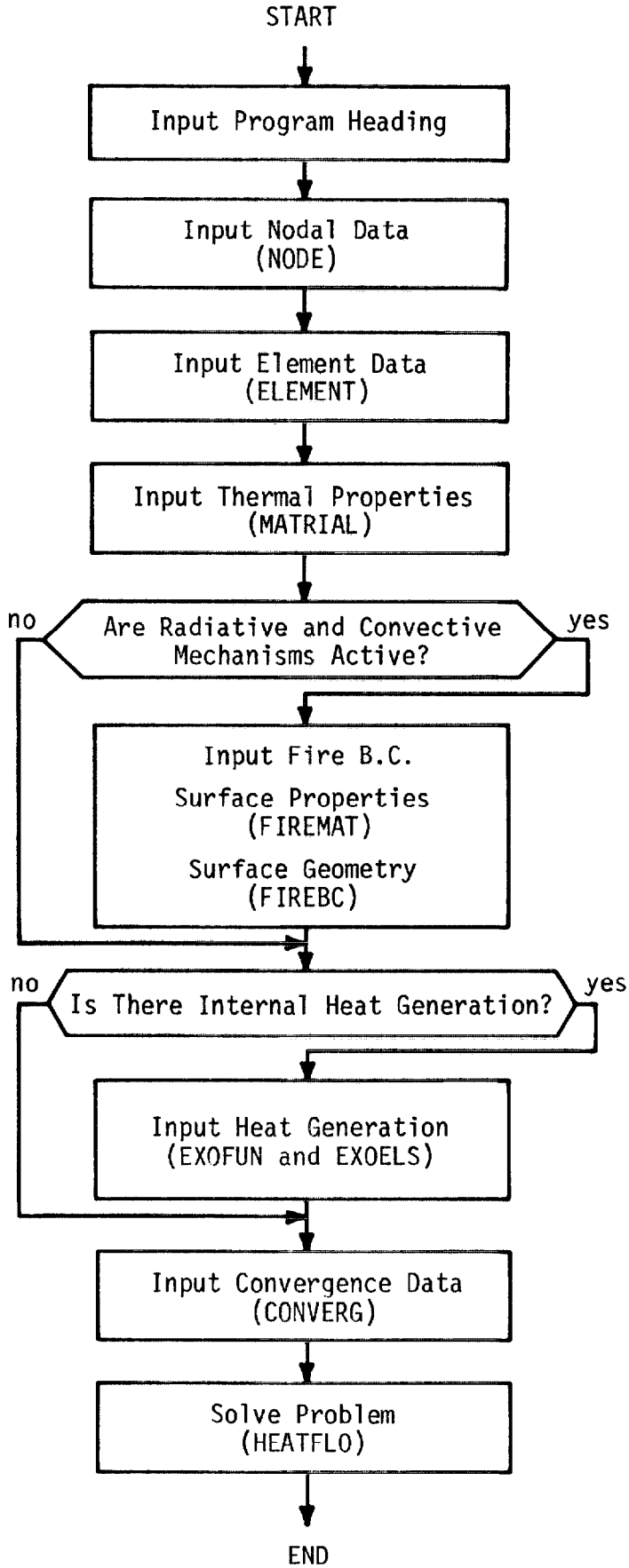

FIGURE 2.5 FLOW CHART FOR PROGRAM FIRES-T3

(Titles in Parenthesis are Names of Subroutines)

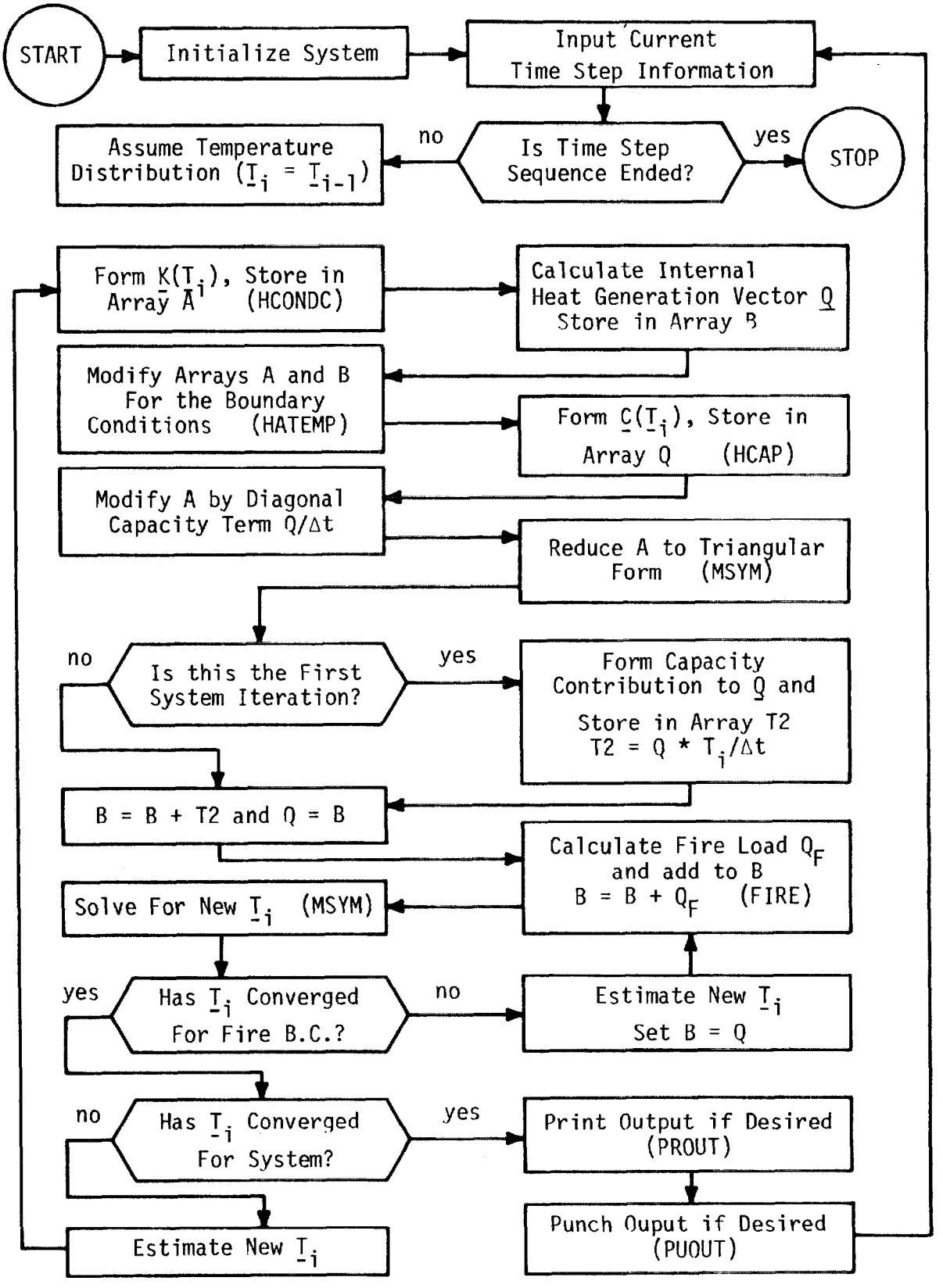

FIGURE 2.6 FLOW CHART FOR SUBROUTINE HEATFLO ASSUMING FIRE BOUNDARY CONDITIONS

(Titles in Parenthesis are Names of Program Subroutines)

dynamically dimensioned. That is, the amount of computer storage space allotted for each variable is specified based on the size of the problem being analyzed. The organization of this dynamic dimensioning scheme is shown in Table 2.1.

ADDRESS	DIMENSION	ARRAY	CONTENTS
N1=1	NUMNP	X	X-coordinates of nodes
N2	NUMNP	Y	Y-coordinates of nodes
N3	NUMNP	Z	Z-coordinates of nodes
ND0	NUMNP	KODE	Indicator for type of boundary condition (Flow or Temperature)
ND1	NUMNP	ID or D	Intermediate storage needed in calculations
ND2	NUMNP	MA	
ND3	NUMNP	T1	
ND4	NUMNP	T2	
ND5	NUMNP	T3	

TABLE 2.1 DYNAMICALLY DIMENSIONED STORAGE ALLOCATION FOR FIRES-T3

ADDRESS	DIMENSION	ARRAY	CONTENTS
N4	2 * NEL1D + 4 * NEL2D + 8 * NEL3D	LM	Nodal points of elements
N5	NUMEL	MMTYPE	Material types of elements
N6	NEL1D	BAREA	Cross-sectional areas of one-dimensional elements
N7	NEL2D	THICK	Thickness of two-dimensional elements
NV	NEL3D	VOLUME	Volumes of three-dimensional elements
N8	6 * NMAT	MATL	Control data for material properties
N9	NSTORE	XYS	Storage for material properties
N10	NBCMAT	MAT	Control data for fire B.C. properties
N11	NSTORE	FXYS	Fire B. C. properties

TABLE 2.1 (cont.)

ADDRESS	DIMENSION	ARRAY	CONTENTS
N12	NUMFBC	LI	Nodes bounding surface segments for fire B.C.
N13	NFBC2D + NFBC3D	LJ	
N14	NFBC3D	LK	
N15	NFBC3D	LL	
N16	NUMFBC	LMAT	Fire boundary type
N17	NUMFBC	LFIRE	Fire number
N18	NUMFBC	AIJKL	Area of surface segment
N19	NFBC1D + NFBC2D	LELEM	Element bounding surface segment
N20	3 * NQINT	IEXO	Control data for internal heat generation curves

TABLE 2.1 (cont.)

ADDRESS	DIMENSION	ARRAY	CONTENTS
N21	NSTORE	EXYS	Internal heat generation curves
N22	NINT	IEL	Elements with internal heating
N23	NINT	IMAT	Heating curve for each element
N24	NINT	VEL	Volume of each element
N25	NUMNP	Q	Heat flow vector
N26	NUMNP	T	Temperature vector
N27	NUMNP	B	Loading vector used in analysis
N28	NUMEL	AT	Element temperatures
N29	NUMNP * NBAND	A	Effective conductivity matrix
NTOTAL			

TABLE 2.1 (cont.)

3. COMMENTARY

FIRES-T3 and its predecessor FIRES-T have been used to solve a wide variety of heat flow problems [4, 7]. Experience gained in these analyses is drawn upon to present here a brief commentary on practical aspects of using the program.

Few difficulties are encountered in thermal analyses governed by specified temperature or heat flow boundary conditions. The principal factors which determine the effective use of the program are the layout of the finite element mesh and the selection of time-step intervals. On the one hand both must be fine enough to properly model the thermal behavior of the structure, and on the other as few elements as possible should be used since computational effort increases roughly with the cube of the number of nodes. Also, nodes should be numbered in such a way as to minimize the bandwidth of the resulting matrix equations. Time-step size can vary during the time integration to most efficiently reflect the expected rate of temperature change.

The heat flow problem is nonlinear whenever conductivity or heat capacity are temperature-dependent. However, with models of thermal properties used here this nonlinearity is negligible within a time step and adequate results are obtained by a linearized analysis (number of iterations = 0), thereby greatly reducing solution cost. When boundary conditions are linear, convergence is effected in a few iterations with little likelihood of instability. However, the fire boundary condition, including both conduction and radiation terms, is highly nonlinear and in order to ensure convergence of an iterative solution the time step size must be kept quite small, since numeric instability in the region of the fire surface can result when fire temperatures are high. A higher-order nonlinear technique (such as Newton-Raphsen iteration) would improve stability and convergence rate of the solution and may be incorporated into a future version of FIRES-T3. Over-convergence factors also improve the stability of the nonlinear iteration and are recommended when using the nonlinear fire boundary condition. When divergence occurs at some time step in an analysis, it is best to shorten the time step size for the remaining part of the analysis and restart the step-by-step solution from the last converging time step. Therefore,

whenever it is impossible to know a priori the time step sizes needed, nodal temperatures should be punched at each time step in case a restart is necessary.

The fire environment in FIRES-T3 is modeled through a pseudo-fire, defined by a time-temperature curve, and the convective and radiative heat flow terms in the fire boundary condition. The phenomena associated with heat transfer in the turbulent environment of a fire are difficult to model exactly. The possibility of including the temperature dependence of the related parameters may be included, and the detailed temperature and flow fields in a fire compartment may be modeled by subdividing the fire into zones with different characteristics. In the pseudo-fire concept the critical parameters appear to be the emissivity of both the flame and the surface of the structural element. This assumes that at the temperatures normally associated with fires, the radiative heat transfer mechanism predominates. At present, a value of 0.9 is used for the emissivity of concrete. The value of flame emissivity appears to be more uncertain with potential values ranging from 0.3 to 0.9. Current work indicates a possible dependency of the flame emissivity on the particular content of the flame, which may vary greatly from the controlled fire of a test furnace to that of the uncontrolled environment of an actual fire. In addition, radiation sources, compartment enclosure surfaces, may contribute to the overall fire boundary condition problem.

The radiation component of heat transfer at a boundary of an element exposed to fire depends on the spatial configuration of the enclosure, the geometry of the element under consideration, and the emissivities of the fire, the element surface, and the enclosure surface. For concrete structural elements surrounded by fire the effective emissivity ε falls in the range of 0.3 to 0.9 [9]. The radiation boundary condition in Equation (2.55) is an attempt to represent the influence of the fire and the element surface emissivities on the radiative heat transfer. This approximation is sensitive to the selection of ε_f and ε_s values. Unless it can be shown by comparison with experimental data that this approximation give reliable results, it is recommended that for concrete structures exposed to fire both values of ε_f and ε_s where $0.5 < \varepsilon < 0.7$ be replaced by effective emissivity ε.

The capability of modeling internal heat generation in FIRES-T3 introduces no numerical complications or sensitivities. This option could be used to include the effects of internal combustion in a fire analysis [5]. Also, it could solve a variety of other temperature problems such as determining temperature rise in mass concrete due to hydration of cement paste [4].

ACKNOWLEDGEMENTS

The research described in this report has been conducted as part of a study on structural response to fire carried out at the University of California, Berkeley, under the National Science Foundation RANN Program, Grant No. ERT70-01080 A05 (formerly Grant No. GI-43). Partial support for publication of this report was provided by National Bureau of Standards Grant No. NBS-G7-9006-10/77. The results of the study and their interpretation have not yet been reviewed by the National Bureau of Standards and represent only the preliminary conclusions of the investigators. The support of the sponsors is gratefully acknowledged.

The work presented in this report is an extension of earlier work by Zuhayr Nizamuddin [7], Jim Becker et al [1] and Hani Bizri [3].

REFERENCES

1. Becker, J. M., Bizri, H., and Bresler, B., "FIRES-T - A Computer Program for the FIre REsponse of Structures - Thermal," Report No. UCB FRG 74-1, Fire Research Group, Structural Engineering and Structural Mechanics, Department of Civil Engineering, University of California, Berkeley, 1974.

2. Becker, J. and Bresler, B., "FIRES-RC - A Computer Program for the FIre REsponse of Structures - Reinforced Concrete Frames," Report No. UCB FRG 74-3, Fire Research Group, Structural Engineering and Structural Mechanics, Department of Civil Engineering, University of California, Berkeley, 1974.

3. Bizri, H., "Structural Capacity of Reinforced Concrete Columns Subjected to Fire Induced Thermal Gradients," Report No. UC SESM 73-1, Structural Engineering Laboratory, University of California, Berkeley, 1973.

4. Bresler, B., and Iding, R. H., "Effects of Normal and Extreme Environment on Reinforced Concrete Structures," Report No. UC SESM 77-4, Department of Civil Engineering, University of California, Berkeley, 1977.

5. Knudsen, R. M., Performance of Structural Wood Members Exposed to Fire, Ph. D. Dissertation, Department of Civil Engineering, University of California, Berkeley, 1973.

6. Iding, R. H., Bresler, B., and Nizamuddin, Z., "FIRES-RC II - A Computer Program for the FIre REsponse of Structures - Reinforced Concrete Frames - Revised Version," Report No. UCB FRG 77-8, Fire Research Group, Structural Engineering and Structural Mechanics, Department of Civil Engineering, University of California, Berkeley, 1977.

7. Nizamuddin, Z., Thermal and Structural Analysis of Reinforced Concrete Slabs in Fire Environments, Ph. D. Dissertation, Department of Civil Engineering, University of California, Berkeley, 1976.

8. Wickstrom, U., "A Numerical Procedure for Calculating Temperature in Hollow Structures Exposed to Fire," Report No. UCB FRG 77-9, Department of Civil Engineering, University of California, Berkeley, 1977.

9. Sahota, M. S. and Pagni, P. J., "Temperature Fields in Structural Elements Subjected to Fire," Report No. UCB FRG 75-19, Department of Mechanical Engineering, University of California, Berkeley, 1977.

10. Wilson, E. L., and Nickell, R. E., "Application of the Finite Element Method to Heat Conduction Analysis," Nuclear Engineering and Design, Vol. 4, 1966, pp. 276-286.

11. Wilson, E. L., and Farhoomand, I., "Non-Linear Heat Transfer Analysis of Axisymmetric Solids," Report No. UC SESM 71-6, Structural Engineering Laboratory, University of California, Berkeley, April 1971.

12. Zienkiewicz, O. C., The Finite Element Method in Structural and Continuum Mechanics, McGraw-Hill, London, 1967.

13. Zienkiewicz, O. C., "Isoparametric and Allied Numerically Integrated Elements - A Review," Numerical and Computer Methods in Structural Mechanics, S. J. Fenres, et. al. (eds.), Academic Press, N. Y., 1973, pp. 13-42.

APPENDIX A

INPUT INSTRUCTIONS FOR FIRES-T3

APPENDIX A - INPUT INSTRUCTIONS FOR FIRES-T3

Contents

I.	Heading Card	A-4
II.	Nodal Data	A-4
III.	Element Data	A-5
IV.	Thermal Material Property Data	A-10
V.	Fire Boundary Condition Data	A-13
VI.	Internal Heat Generation Data	A-19
VII.	Convergence Criteria	A-22
VIII.	Initial Conditions	A-23
IX.	Time-Fire History	A-25

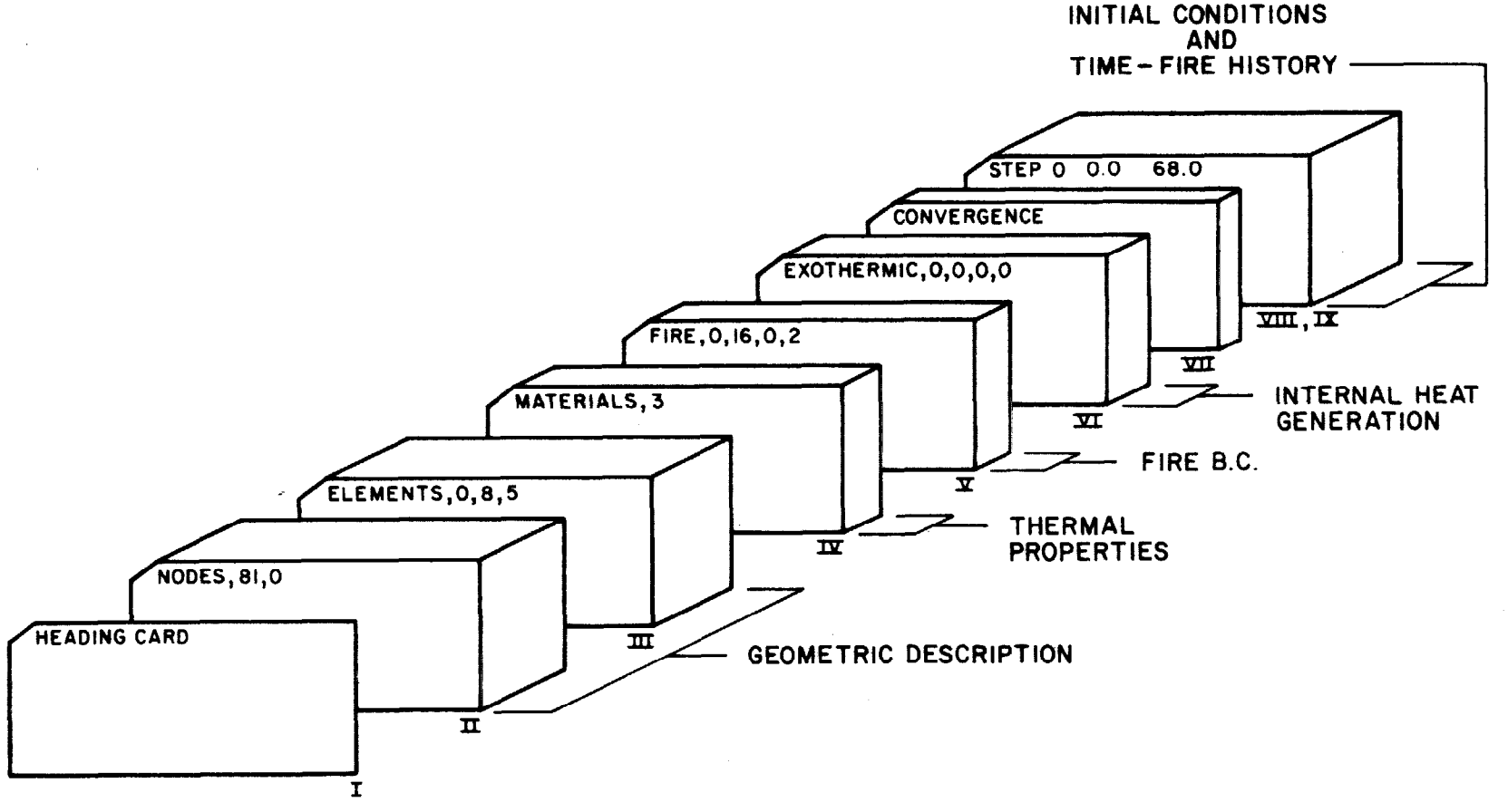

FIGURE A.1 TYPICAL INPUT DECK FOR FIRES-T3

I. HEADING CARD (6A10)

NOTE/ Begin each new data case with a heading card. To halt the program insert two blank cards instead of a heading card.

II. NODAL DATA

A. Control Card (Alphanumeric)

NODES, N1, N2

note	field	variable	entry
(1)	NODES	--	Enter the word "NODES"
	N1	NUMNP	Number of nodal points
	N2	NTBC	Number of nodal points with a specified temperature boundary condition

NOTE/ This is an alphanumeric control card containing both a key word (NODES) to identify the block of input data to follow and control parameters (N1 and N2) for that block of data. Alphanumeric control cards are left-justified with no blanks in the list. Note the examples in Fig. A.1.

B. Nodal Cards (I5,3E10.0)

note	columns	variable	entry
(1)	1-5	N	Nodal point number
(2)	6-15	X(N)	X-coordinate
	16-25	Y(N)	Y-coordinate
(3)	26-35	Z(N)	Z-coordinate

NOTES/

(1) Nodal point cards must be in numerical sequence. If cards are omitted, the missing nodes are generated at equal intervals along a straight line between the bounding nodal points.

(2) Nodal coordinates may be input using any system of units. However, this same system must be used to define all other input quantities that follow.

(3) In purely two-dimensional heat flow problems, leave the Z-coordinate blank.

C. Specified Temperature Nodes (16I5)

Omit this card if (N2) on the control card is zero

note	columns	variable	entry
(1)	1-5	ID(1)	Node number of first node in which temperature is fixed as a boundary condition
	6-10	ID(2)	Node number of second specified temperature node
	.	.	.
	.	.	.
	.	.	.
	.	.	.
(2)	.	ID(N2)	Continue until all N2 nodes are input

NOTES/

(1) Three types of boundary conditions are possible in FIRES-T3:

1) Temperature specified

2) Heat flow specified

3) Fire B.C.

If the first type of B.C. is to be used, all nodes with a specified temperature must be identified on this card. Actual temperatures are input later in Data Block IX. All boundary nodes not specified here are assumed to have a boundary condition of type 2 or type 3.

(2) Input 16 temperature nodes per card.

III. ELEMENT DATA

A. Control Card (Alphanumeric)

ELEMENTS, N1, N2, N3

note	field	variable	entry
(1)	ELEMENTS	--	Enter the word "ELEMENTS"

(2)	N1	NELID	Number of one-dimensional elements
(3)	N2	NEL2D	Number of two-dimensional elements
(4)	N3	NEL3D	Number of three-dimensional elements

NOTES/

(1) This is an alphanumeric control card with key word (ELEMENTS) and control parameters (N1, N2 and N3) as in Fig. A.1.

(2) Enter the total number of one-dimensional elements to be used. If 1-D elements are not to be used, enter "0" as N1.

(3) Enter the number of two-dimensional elements. If 2-D elements are not used, enter "0" as N2.

(4) Enter the number of three-dimensional elements. If 3-D elements are not used, enter "0" as N3.

A single mesh may utilize all three of the above element types.

B. <u>One-Dimensional Element Cards</u> (4I5, F10.0)

Omit these cards if (N1) on the control card above is zero

note	columns	variable	entry
(1)	1-5	NUM	Element number GE.1 and LE. NEL1D
(2)	6-10	I	Nodal point I
	11-15	J	Nodal point J
(3)	16-20	MTYPE	Material identification number
(4)	21-30	BAREA	Cross-sectional area of one-dimensional element

NOTES/

(1) Elements must be input in ascending element number order. If element cards are missing, the program generates the missing elements by incrementing NUM and nodal points I and J. A generated element assumes the material type and cross-sectional area of the element immediately preceding it. The last one-dimensional element in the mesh cannot be generated.

(2) The program uses isoparametric bar elements defined by their end nodes I and J, as shown in Fig. A.2(a). Enter the global node number of each end node. These one-dimensional bar elements may be used in a two- or three-dimensional nodal mesh. Any orientation in space is permissible.

(3) One or more sets of thermal material properties are input in the next data block, each of them labelled by an identification number. Enter the identification number of the material this element is composed of.

(4) Enter the cross-sectional area of the one-dimensional element, as shown in Fig. A.2. For a purely one-dimensional analysis, set (BAREA) equal to unity (1.0).

C. Two-Dimensional Element Cards (6I5, F10.0)

Omit these cards if (N2) on the control card above is zero.

note	columns	variable	entry
(1)	1-5	NUM	Element number GE.1 and LE. NEL2D
(2)	6-10	I	Nodal point I
	11-15	J	Nodal point J
	16-20	K	Nodal point K
	21-25	L	Nodal point L
(3)	26-30	MTYPE	Material identification number
(4)	31-40	THICK	Thickness of two-dimensional element EQ.0.0, default of 1.0 used

NOTES/

(1) Two-dimensional elements must be input in ascending element number order. Start with "1" even if one-dimensional elements have also been used. If element cards are missing, the program generates the missing elements by incrementing NUM and nodal points I, J, K, and L. A generated element assumes the material type and thickness of the element immediately preceding it. The last two-dimensional element in the mesh cannot be generated.

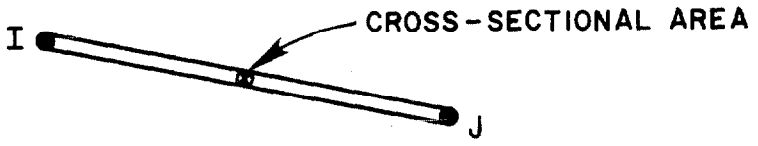

(a) ONE-DIMENSIONAL ELEMENT

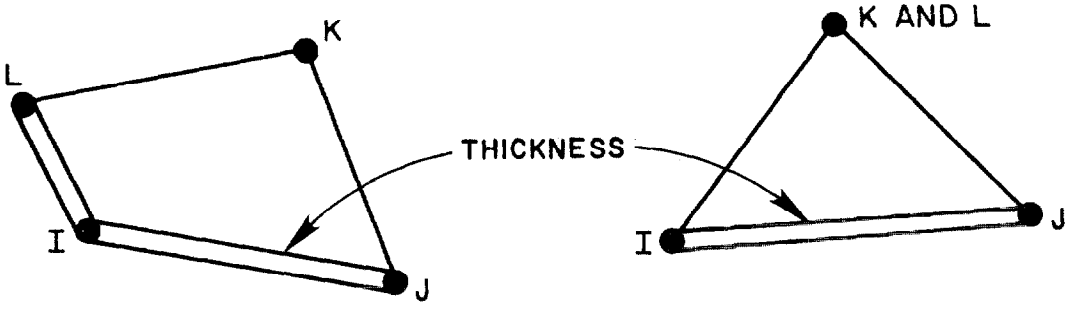

QUADRILATERAL

DEGENERATE QUADRILATERAL (TRIANGLE)

(b) TWO-DIMENSIONAL ELEMENTS

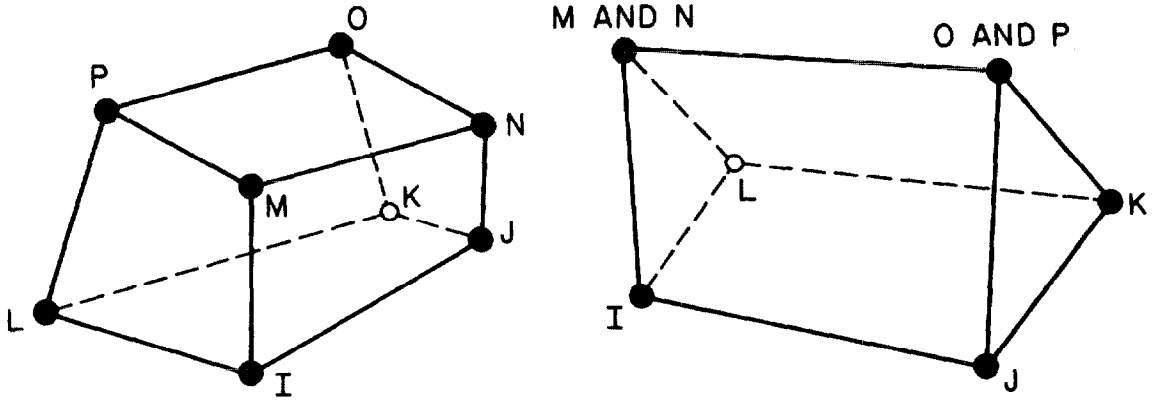

HEXAHEDRON

TYPICAL DEGENERATE HEXAHEDRON

(c) THREE-DIMENSIONAL ELEMENTS

FIGURE A.2 ELEMENTS AVAILABLE IN FIRES-T3

(2) The program uses quadrilateral isoparametric elements defined by their corner nodes (I, J, K, L). Enter the global node number corresponding to each of these four corner nodes in counterclockwise order, as shown in Fig. A.2(b). Triangular elements can be formed by specifying a degenerate quadrilateral, i.e., by letting K and L be defined by the same global nodal point (see Fig. A.2(b)).

These two-dimensional elements may be used in three-dimensional analyses. It is most economical to define two-dimensional elements in an (X, Y) plane (Z = constant, not necessarily zero). However, it is also possible to define two-dimensional elements in an (X, Z) plane or in a (Y, Z) plane. Two-dimensional flow in skewed planes must be modelled by a layer of three-dimensional elements.

(3) One or more sets of thermal material properties are input in the next data block, each of them labelled by an identification number. Enter the identification number of the material this element is composed of.

(4) Enter the thickness of the two-dimensional quadrilateral (or triangle), as shown in Fig. A.2(b). For a purely two-dimensional analysis, set (THICK) equal to unity (1.0).

D. <u>Three-Dimensional Element Cards</u> (10I5)

Omit these cards if (N3) on the control card above is zero

note	columns	variable	entry
(1)	1-5	NUM	Element number GE.1 and LE. NEL3D
(2)	6-10	I	Nodal point I
	11-15	J	Nodal point J
	16-20	K	Nodal point K
	21-25	L	Nodal point L
	26-30	M	Nodal point M
	31-35	N	Nodal point N
	36-40	O	Nodal point O
	41-45	P	Nodal point P
(3)	46-50	MTYPE	Material identification number

NOTES/

(1) Three-dimensional elements must be input in ascending element number order. Start with "1" even if one-dimensional or two-dimensional elements have also been used. If element cards are missing, the program generates the missing elements by incrementing NUM and nodal points I, J, K, L, M, N, O, and P. A generated element assumes the material type of the element immediately preceding it. The last element in the mesh cannot be generated.

(2) The program uses hexahedral isoparametric elements defined by their corner nodes (I, J, K, L, M, N, O, P). Enter the global node number corresponding to each of these eight corner nodes in counterclockwise order, bottom layer first, as shown in Fig. A.2(c). Pentahedral or tetrahedral elements may be formed by specifying a degenerate hexahedron, i.e., by letting certain corner nodes be defined by the same global nodal point (see Fig. A.2(c)). Three-dimensional elements are comparatively expensive to form and lower order elements (one-dimensional or two-dimensional) of appropriate thickness should be used in those portions of a solid where heat flow is one- or two-dimensional.

(3) One or more set of thermal material properties are input in the next data block, each of them labelled by an identification number. Enter the identification number of the material this element is composed of.

IV. THERMAL MATERIAL PROPERTY DATA

A. Control Card (Alphanumeric)

MATERIALS, N1

note	field	variable	entry
(1)	MATERIALS	--	Enter the word "MATERIALS"
	N1	NMAT	Number of different material types

NOTE/ This is an alphanumeric control card with key word (MATERIALS) and main control parameter (N1), as in Fig. A.1.

B. Material Data

Input the following set of cards for each material type:

1. Control Card (3I5)

note	columns	variable	entry
(1)	1-5	MK	Number of points used to define heat conductivity function EQ.0, constant conductivity
(1)	6-10	MCP	Number of points used to define specific heat capacity function EQ.0, constant heat capacity
(1)	11-15	MD	Number of points used to define density function EQ.0, constant density

NOTE/

(1) Each material type is characterized by three material parameters: thermal conductivity, thermal heat capacity, and density. Each of these may be input as a constant or as a tabular function of temperature. At least two points are needed to define each function, and linear interpolation is used between points.

2. Heat Conductivity (8E10.0)

note	columns	variable	entry
(1)	1-10	X(1)	Temperature of point 1
	11-20	Y(1)	Value of conductivity function at point 1
	21-30	X(2)	Temperature of point 2
	.	.	.
	.	.	.
	.	.	.
	.		
	.	Y(MK)	Continue until all (MK) points are input.

NOTE/

(1) Input the table that defines the heat conductivity function. Each point is described by an ordered pair (X, Y), where X is temperature and Y is the value of heat conductivity at that temperature, as shown in Fig. A.3. Input 4 such pairs per card and use as many cards as necessary. The table for the function must be defined over the entire temperature range to be considered in the solution process - i.e. extrapolation below the lowest point or beyond the highest point is not permitted.

If conductivity was specified constant with temperature (MK.EQ.0) enter the constant value in columns 1-10.

Units for material properties must be consistent with units used for other input quantities (nodal coordinates, temperature, time step size, etc.).

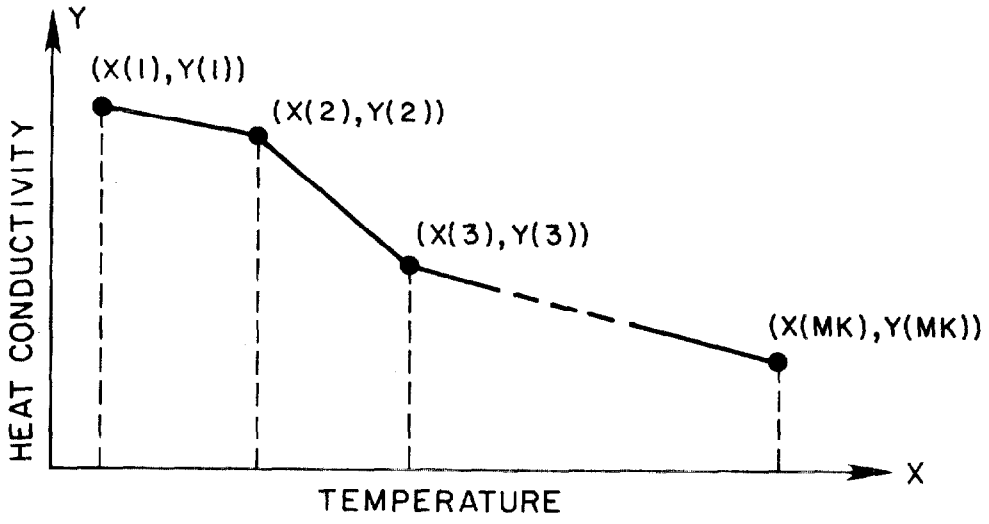

FIGURE A.3 MATERIAL PROPERTY TABLE FORMAT

3. <u>Specific Heat Capacity</u> (8E10.0)

(same as above)

4. Density (8E10.0)

(same as above)

V. FIRE BOUNDARY CONDITION DATA

A. Control Card (Alphanumeric)

FIRE, N1, N2, N3, N4

note	field	variable	entry
(1)	FIRE	-	Enter the word "FIRE"
(2)	N1	NFBC1D	Number of one-dimensional surface nodes exposed to fire
(2)	N2	NFBC2D	Number of two-dimensional surface segments exposed to fire
(2)	N3	NFBC3D	Number of three-dimensional surface areas exposed to fire
(3)	N4	NBCMAT	Number of different surface material types

NOTES/

(1) This is an alphanumeric control card with key word (FIRE) and control parameters (N1, N2, N3, and N4), as shown in Fig. A.1.

If fire boundary conditions are not to be used, insert as control card "FIRE, 0, 0, 0, 0" and go on to Data Block VI.

(2) The fire boundary condition is idealized through the identification of surface segments and their associated thermal properties. For one-dimensional elements, enter (N1), the total number of boundary nodes exposed to fire (see Fig. A.4(a)). For two-dimensional elements, enter (N2), the total number of element edges (surface segments) exposed to fire (see Fig. A.4(b)). For three-dimensional elements, enter (N3), the total number of element surfaces exposed to fire (see Fig. A.4(c)).

(3) Enter the number of different materials used to define fire surface properties.

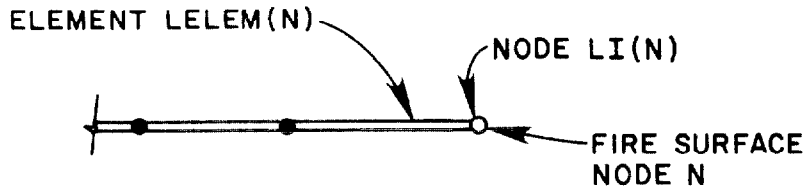

(a) TYPICAL FIRE B.C. SURFACE NODE FOR 1-D ELEMENTS

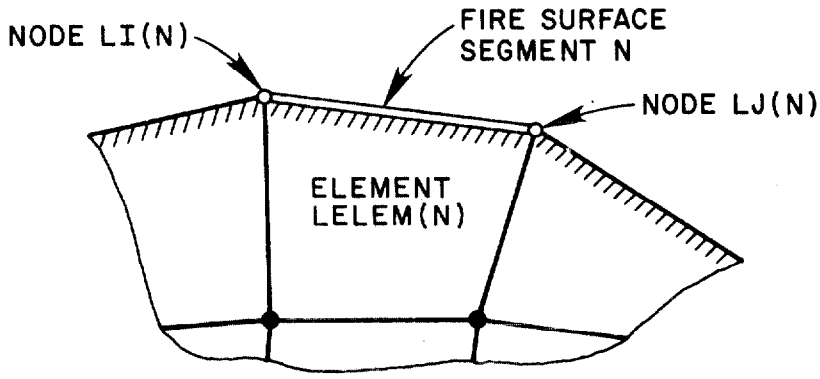

(b) TYPICAL FIRE B.C. SURFACE SEGMENT FOR 2-D ELEMENTS

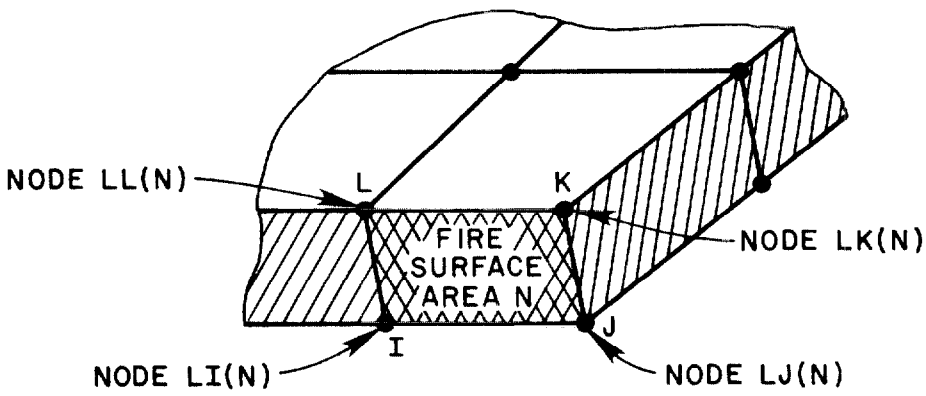

(c) TYPICAL FIRE B.C. SURFACE AREA FOR 3-D ELEMENTS

FIGURE A.4 DESCRIPTION OF FIRE SURFACE

B. Linear/Nonlinear Model Card (Alphanumeric)

note	columns	entry
(1)	1-9	Enter the word "LINEAR" or the word "NONLINEAR" - one or the other.

NOTE/

(1) Either a linear or a nonlinear model may be used for the fire boundary condition. Specify the type on this card.

C. Material Description

1. Linear Material Data

Omit if control card above is "NONLINEAR". Otherwise, input the following set of cards for each material type.

a. Control Card (I5)

note	columns	variable	entry
(1)	1-5	K	Number of points used to define linearized heat transfer function EQ. 0, constant function

NOTE/

(1) Linear surface material properties are input in the same way as conductivity, heat capacity and density in Data Block IV (page A-10)

b. Data Cards (8E10.0)

(same as previous material function input, IV.B.2 page A-11, 4 pairs per card

2. Nonlinear Material Data

Omit these cards if control card above is "LINEAR":

a. Constant Data Card (2E10.0)

note	columns	variable	entry
	1-10	SB	Stephan - Boltzman constant
	11-20	TSHIFT	Shift for absolute temperature

b. Material Data Card (6E10.0)

Input the following card for each material type:

note	columns	variable	entry
(1)	1-10	A	Convection factor
	11-20	P	Power of convection factor
	21-30	V	View factor for radiation term
	31-40	AB	Absorption of surface
	41-50	EF	Emmissivity of flame
	51-60	ES	Emmissivity of surface

NOTE/

See Page 22 for explanation of nonlinear fire boundary condition.

D. Description of Fire Surface

1. Control Card (Alphanumeric)

SURFACE, N1, N2, N3

note	field	variable	entry
(1)	SURFACE	--	Enter the word "SURFACE"
	N1	NS1	Number of one-dimensional surface nodes to be input below LE. NFBC1D
	N2	NS2	Number of two-dimensional surface segments to be input below LE. NFBC2D
	N3	NS3	Number of three-dimensional areas to be input below LE. NFBC3D

NOTE/

(1) This is an alphanumeric control card with key word (SURFACE) and control parameters (N1, N2, and N3), as shown in Fig. A.1. Enter the number of each type of fire B.C. surface elements that will be input on the cards that follow. The number of each type of element must be less than the maximums defined on Card V.A.

2. Description of One-Dimensional Fire Surface Nodes (16I5)

Omit this card if (N1) on control card above is zero:

note	columns	variable	entry
(1)	1-5	LI(1)	Node number of first boundary surface node
(2)	6-10	LMAT(1)	Material type for this surface node LE. NBCMAT
(3)	11-15	LFIRE(1)	Fire number for this surface node
(4)	16-20	LELEM(1)	Element number of one-dimensional iso-parametric bar element adjacent to this surface node
	21-25	LI(2)	Node number of second boundary surface node.
	.	.	.
	.	.	.
	.	.	.
	.	.	.
	.	.	Continue until all (NS1) nodes are input, four nodes per card.

NOTES/

(1) See Fig. A.4(a)

(2) Specify which of the material descriptions input on Cards V.C above applies to this boundary node.

(3) A surface element can be subjected to one of four fires to be input later in the Time-Fire History Data Block.

(4) The area of the surface exposed to fire is taken to be the cross-sectional area of the one-dimensional bar element connected to that surface node, as shown in Fig. A.4(a). One-dimensional fire surface nodes can only be used in conjunction with one-dimensional bar elements.

3. Description of Two-Dimensional Fire Surface Segments (15I5)

Omit this card if (N2) on control card above is zero.

note	columns	variable	entry
(1)	1-5	LI(1)	Node number of segment end I for first surface segment
(1)	6-10	LJ(1)	Node number of segment end J for first surface segment
(2)	11-15	LMAT(1)	Material type for this surface segment LE. NBCMAT
(3)	16-20	LFIRE(1)	Fire number for this surface segment
(4)	20-25	LELEM(1)	Element number of two-dimensional quadrilateral or triangular element adjacent to this surface segment
	26-30	LI(2)	Node of number of segment end I for second surface segment
	.	.	.
	.	.	.
	.	.	.
	.	.	Continue until all (NS2) segments are input, three segments per card

NOTES/

(1) Surface segment runs from I to J, as shown in Fig. A.4(b)

(2) Specify which of the material descriptions input on Cards V.C above applies to this surface segment.

(3) A surface segment can be subjected to one of four fires to be input later in the Time-Fire History Data Block

(4) The edge of one of the quadrilateral elements lies between nodes I and J. Enter the number of that element so that its thickness may be used in determining the area of the surface exposed to fire. Two-dimensional fire surface segments can only be used in conjunction with two-dimensional isoparametric elements.

4. <u>Description of Three-Dimensional Fire Surface Areas</u> (12I5)

Omit this card if (N3) on control card above is zero.

note	columns	variable	entry
(1)	1-5	LI(1)	Node number of corner I for first surface element
(1)	6-10	LJ(1)	Node number of corner J for first surface element
(1)	11-15	LK(1)	Node number of corner K for first surface element
(1)	16-20	LL(1)	Node number of corner L for first surface element
(2)	21-25	LMAT(1)	Material type for this surface element LE. NBCMAT
(3)	26-30	LFIRE(1)	Fire number for this surface element
	31-35	LI(2)	Node number of corner I for second surface element
	.	.	.
	.	.	.
	.	.	.
	.	.	Continue until all (NS3) surface elements are input, two elements per card

NOTES/

(1) A surface area is defined by the four nodes, I, J, K, and L, as shown in Fig. A.4(c). These must be input in counter-clockwise order and lie in the same plane.

(2) Specify which of the material descriptions input on Cards V.C above applies to this surface area.

(3) A surface area can be subjected to one of four fires to be input later in the Time-Fire History Data Block

VI. INTERNAL HEAT GENERATION DATA

A. Control Card (Alphanumeric)

EXOTHERMIC, N1, N2, N3, N4

note	field	variable	entry
(1)	EXOTHERMIC	--	Enter the word "EXOTHERMIC"
(2)	N1	NINTID	Number of one-dimensional elements with internal heat generation
(2)	N2	NINT2D	Number of two-dimensional elements with internal heat generation
(2)	N3	NINT3D	Number of three-dimensional elements with internal heat generation
(3)	N4	NQINT	Number of different heating functions

NOTES/

(1) This is an alphanumeric control card with key word (EXOTHERMIC) and control parameters (N1, N2, N3, and N4), as shown in Fig. A.1.

If internal heat generation is not being considered, insert as control card "EXOTHERMIC, 0, 0, 0, 0" and go to Data Block VII.

(2) Enter how many of each type of element undergoes internal heating from processes such as hydration, combustion, etc.

(3) Enter the number of heat-rate vs. time functions to be considered.

B. Internal Heat Generation Functions

Input the following set of cards for each heating function:

1. Control Card (2I5)

note	columns	variable	entry
(1)	1-5	MK	Number of points used to define heating function GE.2
(2)	6-10	MT	Type of heating curve input EQ.0, heat flow per unit volume EQ.1, heat flow per unit mass

NOTES/

(1) Internal heating rate is input as a tabular function of time. At least two points are needed to define each function and linear interpolation is used between points.

(2) Heating rate may be defined as heat per unit time per unit volume or as heat per unit time per unit mass. Units must be compatible with other input data.

2. Heat Function (3E10.0)

note	columns	variable	entry
(1)	1-10	X(1)	Time of point 1
	11-20	Y(1)	Value of heat rate at point 1
	21-30	X(2)	Time of point 2
	.	.	.
	.	.	.
	.	.	.
	.	Y(MK)	Continue until all (MK) points are input

NOTE/

(1) Input the table that defines internal heating rate in the same way as conductivity, heat capacity and density in IV.B.2, 4 points per card.

C. Data for One-Dimensional Elements (16I5)

Omit this card if (N1) on control card is zero.

note	columns	variable	entry
	1-5	IEL(1)	Element number of first one-dimensional bar element undergoing internal heating.
	6-10	IMAT(1)	Heat function number for first element
	11-15	IEL(2)	Element number of second one-dimensional element undergoing internal heating
	16-20	IMAT(2)	Heat function number for second element
	.	.	.
	.	.	.
	.	.	.
	.	IMAT(NINT1D)	Continue until all (NINT1D) elements are input, 8 elements per card.

D. Data for Two-Dimensional Elements (16I5)

Omit this card if (N2) on Control Card is zero.

Input element number and heat function number for all (NINT2D) two-dimensional elements, 8 per card, in the same way as above.

E. Data for Three-Dimensional Elements (16I5)

Omit this card if (N3) on Control Card is zero.

Input element number and heat function number for all (NINT3D) three-dimensional elements, 8 per card, in the same way as above.

VII. CONVERGENCE CRITERIA

A. Control Card (Alphanumeric)

CONVERGENCE

note	field	variable	entry
(1)	CONVERGENCE	--	Enter the word "CONVERGENCE"

NOTE/

(1) This is an alphanumeric control card with key word (CONVERGENCE) and no control parameters, as in Fig. A.1.

B. Convergence Criteria Card (I5,2F10.0,I5,2F10.0)

note	columns	variable	entry
(1)	1-5	NCONV	Maximum number of iterations permitted for fire B.C. solution
(1)	6-15	CONV	Permissible relative error for fire B.C. iteration
(2)	16-25	BETA	Overconvergence factor for fire B.C. iteration
(3)	26-30	NCONU	Maximum number of iterations permitted for system solution in each time step EQ.0, linear solution - no iteration

note	columns	variable	entry
(3)	31-40	CONU	Permissible relative error for system iteration
(2)	41-50	ALPHA	Overconvergence factor for system iteration

NOTES/

(1) The fire boundary conditions are temperature-dependent and require an iterative solution process, controlled by variables (NCONV) and (CONV) as defined on page 27. If there are no fire B.C.s or if no iteration is desired, leave columns 1-25 blank.

(2) See page 27 . To ignore overconvergence factors, leave blank.

(3) When material properties (heat conductivity, etc.) are temperature-dependent, an iterative process is needed to solve the nonlinear heat flow problem. However, usually it suffices to forgo iteration when material properties change little during a time step, thereby reducing greatly computation costs. In this case (or for linear heat flow problems) leave columns 26-50 blank.

VIII. INITIAL CONDITIONS

A. Initial Time Step Control Card (A4,I6,2F10.0,2X,A3)

note	columns	variable	entry
	1-4	IA	Enter the word "STEP"
(1)	5-10	MDT	Initial number in sequencing of time steps
(1)	11-20	TIME	Initial time (i.e., base time)
(2)	21-30	TEMP	Uniform initial temperature (If initial temperature is nonuniform, leave cols. 21-30 blank and input nodal temperatures on the data card below)
	31-32	-	blank
(3)	33-34	JP	3-symbol alphanumeric code that will appear in columns 74-76 of punched output.

NOTES/

(1) The usual starting point for time step sequencing is "0" and the usual initial time is "0.0". However, nonzero values may be specified if desired.

(2) All nodal temperatures are initialized to this value unless its value is "0.0", in which case all initial nodal temperatures must be input on Card XIII.B below.

(3) If these columns are left blank the code "NODE" will appear on punched nodal temperatures and the code "ELEM" on punched element temperatures.

B. Initial Temperature Distribution Data (7(4X,F6.1))

Omit this card if (TEMP) on control card above is nonzero.

note	columns	variable	entry
(1)	1-4	--	blank
	5-10	T(1)	Initial temperature at node 1
	11-14	--	blank
	15-20	T(2)	Initial temperature at node 2
	.	.	.
	.	.	.
	.	.	.
	.		
	.	T(NUMNP)	Continue until all nodal points are input.

NOTE/

(1) Enter the initial nodal temperatures, seven (7) nodes per data card, using as many cards as necessary. This format is compatible with punched output from the program; hence, this option can be used to restart a previous analysis that must be continued for a longer time period. For a restarted analysis change the initial time (TIME) on the control card to the time at which the previous analysis ended.

IX. TIME-FIRE HISTORY

For each time step input the following block of data:

A. Time Step Control Card (A4,I6,F10.0,I5,4F10.0,4I3)

note	columns	variable	entry
	1-4	IA	Enter the word "STEP"
(1)	5-10	NDT	Time step number
(2)	11-20	DT	Time step interval
(3)	21-25	ITOF	Number of non-zero flow or temperature boundary conditions
(4)	26-35	TFIRE(1)	Temperature of fire 1
	36-45	TFIRE(2)	Temperature of fire 2
	46-55	TFIRE(3)	Temperature of fire 3
	56-65	TFIRE(4)	Temperature of fire 4
	66-68	I1	Printed output desired for this time step EQ.0, no output EQ.1, nodal temperatures EQ.2, element temperatures EQ.3, both nodal and element temperatures
	69-71	I2	Punched output desired for this time step EQ.0, no punched output EQ.1, nodal temperatures EQ.2, element temperatures EQ.3, both nodal and element temperatures
(5)	72-74	I6	Intermediate printed output for debugging purposes EQ.0, no printout EQ.1, debugging printout
(6)	75-77	I7	Fire boundary condition flag EQ.0, continue with same fire B.C. surfaces previously defined EQ.1, input new fire B.C. surface in Data Block IX.C below

NOTES/

(1) Time step cards must be input in ascending sequence with no time steps omitted.

(2) Input the length of the time step in the same units used to define other input quantities. To end a data case input a negative time step size in these columns and then proceed to the next data case (Heading Card).

(3) Enter the total number of nonzero fixed heat flow or fixed temperature boundary condition nodes. The value of flow or temperature for each of these nodes is entered on the next data card.

(4) Up to four fire histories can be defined for use in conjunction with the fire boundary conditions input in Data Block V. Enter the temperature of each fire at the end of the time step.

(5) If convergence difficulties are encountered in any particular analysis, this option may be called to print nodal temperatures during each iteration. This option can also be used to determine an efficient overconvergence factor.

(6) A fire boundary surface is defined in Data Block V and can be used for all time steps in the fire history. However, it is possible to change the fire surface during any time step by setting (I7) equal to "1" and inputting the new surface below. The new surface replaces the one previously input and is used for all subsequent time steps.

B. <u>Nonzero Boundary Condition Data</u> (5(I5,F10.0))

Omit this card if (ITOF) on Control Card above is zero.

note	columns	variable	entry
(1)	1-5	J(1)	Node number
	6-15	FT(1)	Specified temperature or flow at that node
	16-20	J(2)	Node number

note	columns	variable	entry
	21-30	FT(2)	Specified temperature or flow at that node
	.	.	.
	.	.	.
	.	.	.
	.		
	.	FT(ITOF)	Continue until all (ITOF) boundary nodes are input.

NOTE/

(1) Input the global node number and the specified temperature boundary condition or specified heat flow boundary condition for each of the (ITOF) boundary nodes. Enter five (5) nodes per data card and use as many cards as necessary. This data must be input for each time step - even if the boundary conditions do not change from time step to time step. Fixed flow nodes are differentiated from fixed temperature nodes using the information input previously in Data Block II.C.

C. Description of New Fire Surface

Omit these cards if (I7) on the control card above is zero.

1. Control Card (Alphanumeric)

SURFACE, N1, N2, N3

(Same format as Card V.D.1, page A-16)

2. Description of One-Dimensional Fire Surface Nodes (16I5)

Omit this card if (N1) is zero

(Same format as Card V.D.2, page A-17)

3. Description of Two-Dimensional Fire Surface Segments (15I5)

Omit this card if (N2) is zero

(Same format as Card V.D.3, page A-18)

4. <u>Description of Three-Dimensional Fire Surface Areas</u> (12I5)

Omit this card if (N3) is zero

(Same format as Card V.D.4, page A-19)

APPENDIX B

SAMPLE PROBLEMS

SAMPLE PROBLEM 1 - COLUMN CROSS-SECTION WITH UNIFORM FIRE EXPOSURE

The first sample problem is a two-dimensional thermal analysis of a square column (Fig. B.1) from the basement level of a typical reinforced concrete frame structure. It is necessary only to consider a quadrant of the column in the thermal analysis because of its cross-sectional symmetry and the uniformity of the intended fire exposure. The column is thus idealized by the finite element grid in Fig. B.2, where planes of symmetry are modeled as insulated ($Q_p = 0$) surfaces. The thermal properties used in both sample problems are those given by Bizri [3]. The choice of the grid was based on the results of previous studies. A fine grid is employed in the vicinity of the fire boundary since a steep temperature gradient is to be expected there. A coarser grid is used in the center of the column since the gradient there is expected to be lower. The steel bars have been idealized as rectangles based on an area equivalence ($S = 0.89D$). The flexibility of steel placement is apparent from Fig. B.2, allowing convenient modeling of any cross-section regardless of steel arrangement. The column is analyzed for two time-temperature curves (pseudo-fires):

1) A long duration moderate intensity fire (ASTM E-119), and

2) A short duration high intensity fire (SDHI).

These two pseudo-fire curves are shown in Figs. B.3 and B.4, respectively.

The fire boundary condition is simulated with the nonlinear model using a concrete emissivity of 0.9 and a flame emissivity of 0.3. Input data for this problem is given in Table B.1 (for the first few time steps), and typical output is given in Table B.2. Figs. B.3 and B.4 are graphs showing the results of the analysis as the variation of temperature with time for certain elements, the exterior corner element (78) and the interior corner element (1), two steel elements (60 and 8), and a side element (10). The ASTM fire was also considered using a flame emissivity of 0.9 (Fig. B.5). The importance of flame emissivity can be seen by comparing Figs. B.3 and B.5. The central processing time required for each case is 49 seconds using the University of California CDC 6400 computer.

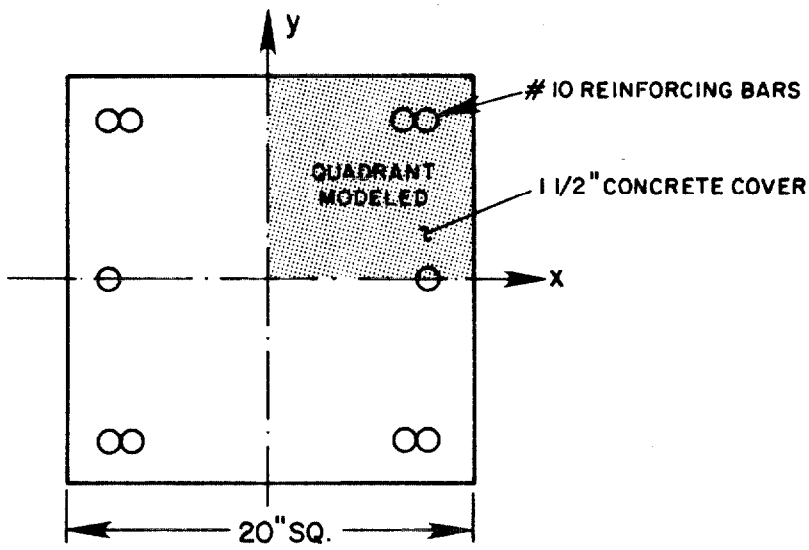

FIGURE B.1 COLUMN CROSS-SECTION

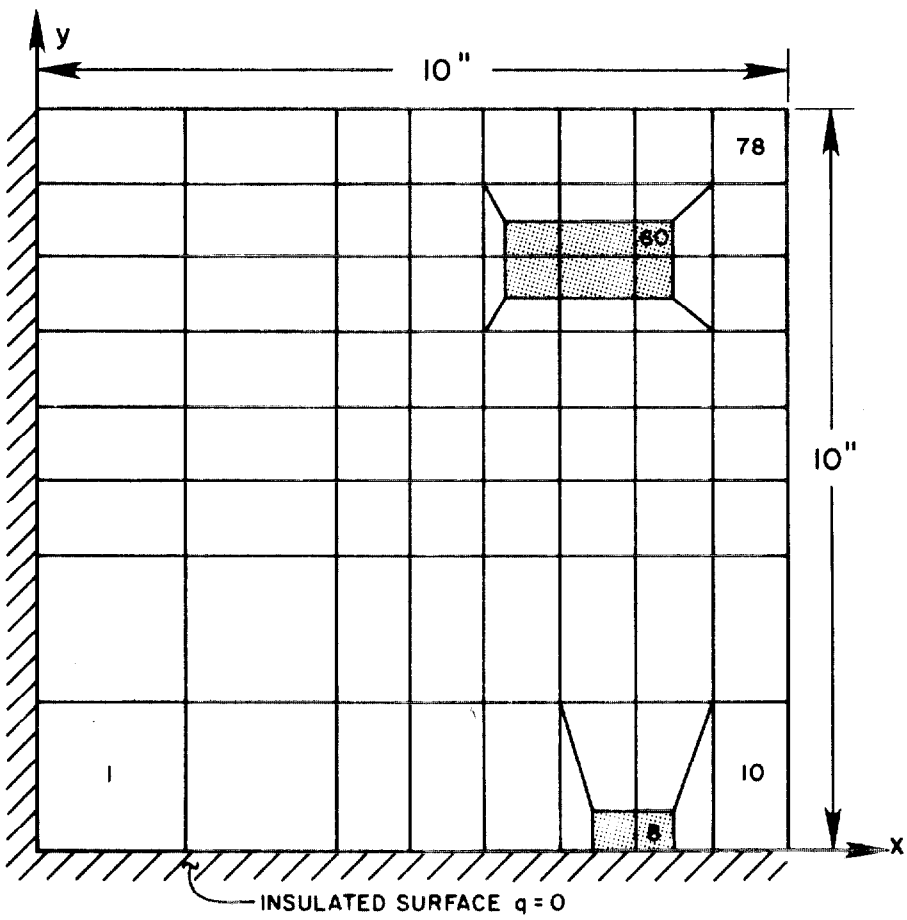

FIGURE B.2 FINITE ELEMENT MESH FOR COLUMN QUADRANT (TWO-DIMENSIONAL QUADRILATERAL ELEMENTS)

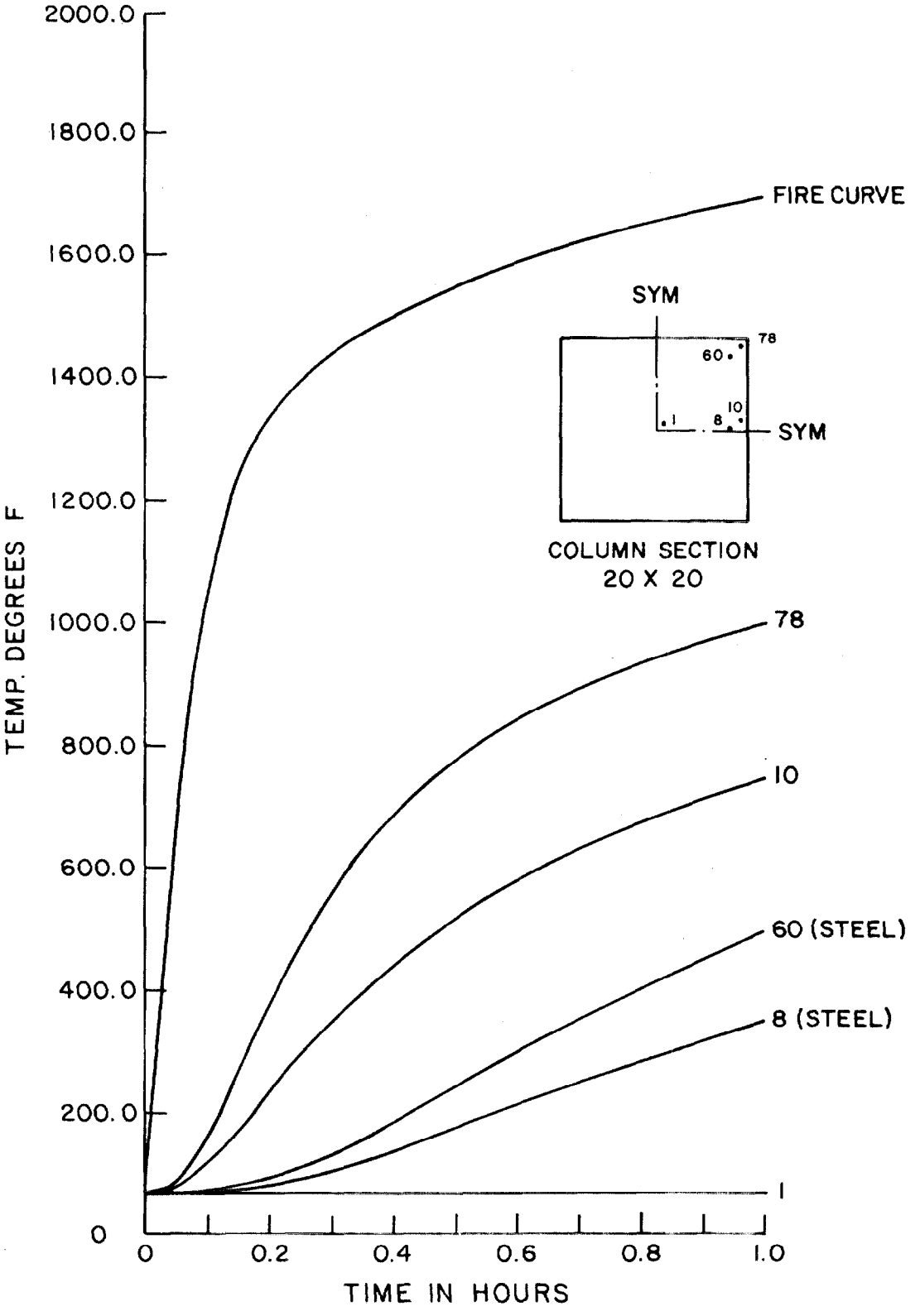

FIGURE B.3 TEMPERATURE HISTORIES FOR SELECT ELEMENTS IN COLUMN UNIFORMLY EXPOSED TO ASTM FIRE (ε_f = 0.3)

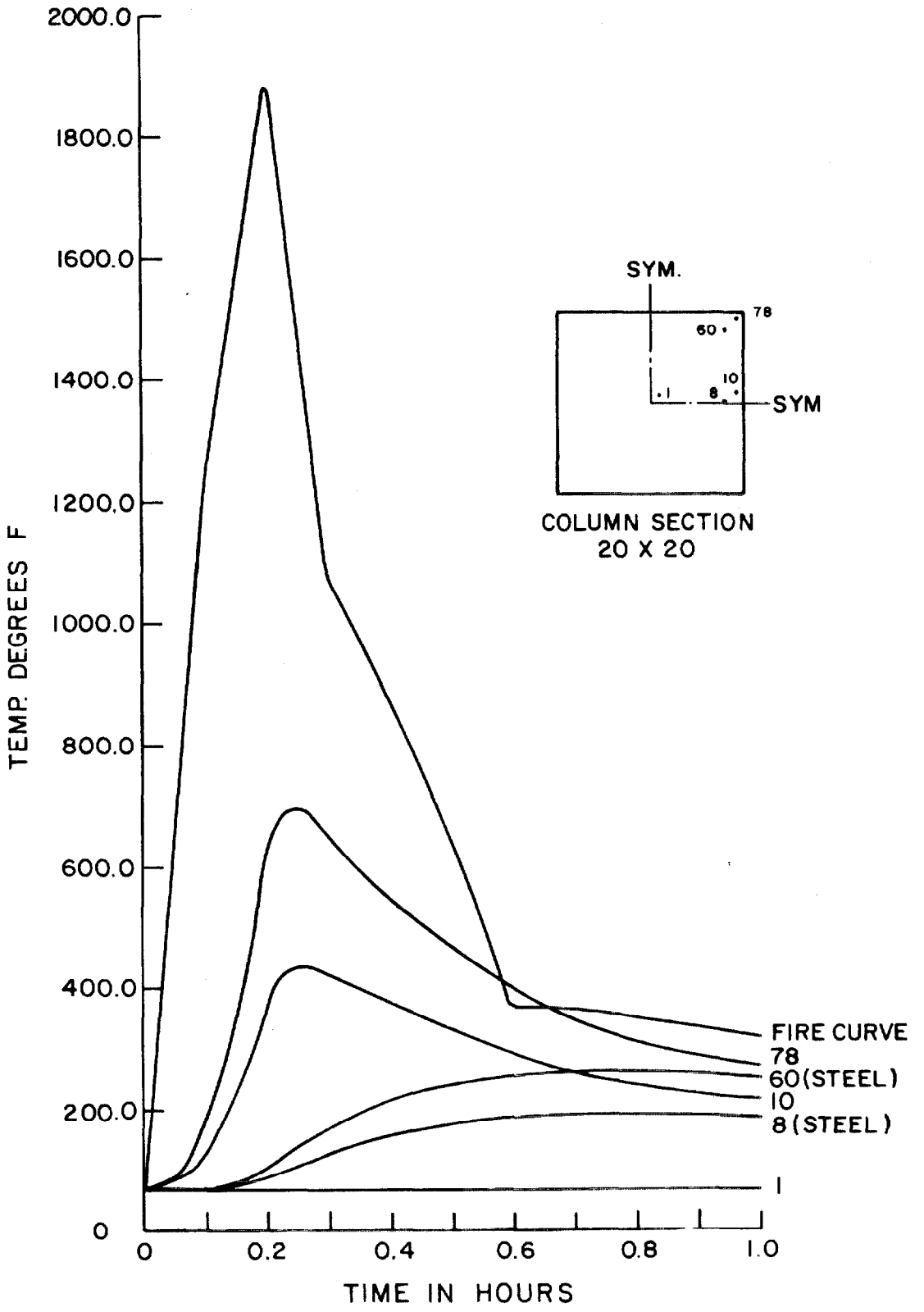

FIGURE B.4 TEMPERATURE HISTORIES FOR SELECT ELEMENTS IN COLUMN UNIFORMLY EXPOSED TO SDHI FIRE (ε_f = 0.3)

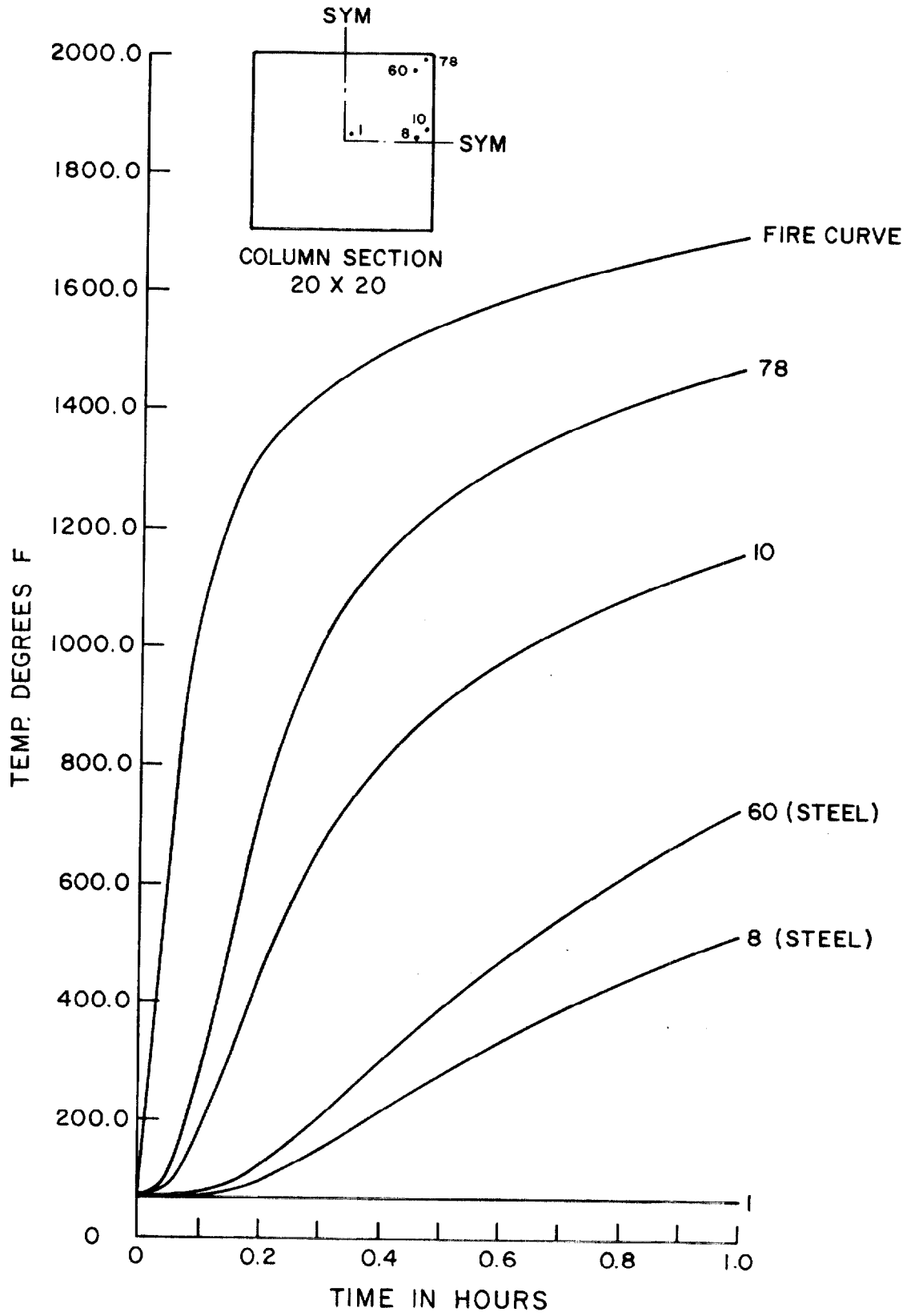

FIGURE B.5 TEMPERATURE HISTORIES FOR SELECT ELEMENTS IN COLUMN UNIFORMLY EXPOSED TO ASTM FIRE (ε_f = 0.9)

```
*** INTERIOR BASEMENT COLUMN - BLDG STUDY - ASTM FIRE ***
NODES,96,0
    1        0.        0.
    3    .333333        0.
    6    .583333        0.
    7    .614154        0.
    8    .666667        0.
    9    .708333        0.
   10    .750000        0.
   11    .833333        0.
   12    .614154    .047086
   13    .666667    .047086
   14    .708333    .047086
   15        0.     .166667
   17    .333333    .166667
   23    .833333    .166667
   24        0.     .333333
   26    .333333    .333333
   32    .833333    .333333
   33        0.     .416667
   35    .333333    .416667
   41    .833333    .416667
   42        0.     .500000
   44    .333333    .500000
   50    .833333    .500000
   51        0.     .583333
   53    .333333    .583333
   55    .500000    .583333
   56    .520834    .614154
   57    .583333    .583333
   58    .583333    .614154
   59    .666667    .583333
   60    .666667    .614154
   61    .708333    .614154
   62    .750000    .583333
   63    .833333    .583333
   64        0.     .666667
   66    .333333    .666667
   68    .500000    .666667
   69    .520834    .666667
   70    .583333    .666667
   71    .666667    .666667
   72    .708333    .666667
   73    .750000    .666667
   74    .833333    .666667
   75        0.     .750000
   77    .333333    .750000
   79    .500000    .750000
   80    .520834    .708333
   81    .583333    .750000
   82    .583333    .708333
   83    .666667    .750000
   84    .666667    .708333
   85    .708333    .708333
   86    .750000    .750000
```

TABLE B.1 INPUT FOR SAMPLE PROBLEM ONE

```
   87    .833333    .750000
   88         0.    .833333
   90    .333333    .833333
   96    .833333    .833333
ELEMENTS,0,78,0
    1     1     2    16    15     1          1.0
    6     6     7    12    20     1          1.0
    7     7     8    13    12     2          1.0
    9     9    10    22    14     1          1.0
   10    10    11    23    22     1          1.0
   11    12    13    21    20     1          1.0
   12    13    14    22    21     1          1.0
   13    15    16    25    24     1          1.0
   21    24    25    34    33     1          1.0
   29    33    34    43    42     1          1.0
   37    42    43    52    51     1          1.0
   41    46    47    57    55     1          1.0
   42    47    48    59    57     1          1.0
   43    48    49    62    59     1          1.0
   44    49    50    63    62     1          1.0
   45    51    52    65    64     1          1.0
   50    55    57    58    56     1          1.0
   51    57    59    60    58     1          1.0
   52    59    62    61    60     1          1.0
   53    61    62    73    72     1          1.0
   54    62    63    74    73     1          1.0
   55    56    58    70    69     2          1.0
   56    58    60    71    70     2          1.0
   57    60    61    72    71     2          1.0
   58    69    70    82    80     2          1.0
   59    70    71    84    82     2          1.0
   60    71    72    85    84     2          1.0
   61    64    65    76    75     1          1.0
   66    80    82    81    79     1          1.0
   67    82    84    83    81     1          1.0
   68    84    85    86    83     1          1.0
   69    72    73    86    85     1          1.0
   71    75    76    89    88     1          1.0
   75    79    81    93    92     1          1.0
   76    81    83    94    93     1          1.0
   77    83    86    95    94     1          1.0
   78    86    87    96    95     1          1.0
MATERIALS,2
    4     0     0
        0.0        1.01      390.0       1.01     1650.0      0.506     3000.0      0.506
      0.272
      150.0
    3     4     0
        0.0       30.00     1100.0      19.90     3000.0      19.90
        0.0       0.107      750.0      0.144     1100.0      0.172     3000.0      0.172
      480.0
FIRE,0,16,0,1
NONLINEAR
    1.7E-9       460.0
       .27        1.25        1.0        0.9        0.3        0.9
SURFACE,0,16,0
```

```
        10        20        30        40        50        60        70        80
  11   23   1    1   10   23   32    1   1   20   32   41   1    1   28
  41   50   1    1   36   50   63    1   1   44   63   74   1    1   54
  74   87   1    1   70   87   96    1   1   78   96   95   1    1   78
  95   94   1    1   77   94   93    1   1   76   93   92   1    1   75
  92   91   1    1   74   91   90    1   1   73   90   89   1    1   72
  89   88   1    1   71
EXOTHERMIC,0,0,0,0
CONVERGENCE
  15        .005      -.25
STEP     0        0.0       68.0
STEP     1       .025        347.600                                3  2
STEP     2       .025        627.200                                3  2
STEP     3       .025        906.800                                3  2
STEP     4       .025       1060.000                                3  2
STEP     5       .025       1150.000                                3  2
        10        20        30        40        50        60        70        80
```

```
*****************************************************************

    FFFFF   I   RRRRR   EEEEE   SSSSS           TTTTT   33333
    F       I   R   R   E       S                 T       3
    F       I   R   R   E       S                 T      3
    F       I   R   R   E       S                 T     3
    FFF     I   RRRRR   EEE     SSSSS   =====     T    3333
    F       I   RR      E           S             T        3
    F       I   R R     E           S             T        3
    F       I   R  R    E           S             T        3
    F       I   R   R   E           S             T        3
    F       I   R   R   EEEEE   SSSSS             T    33333

      A THERMAL ANALYZER FOR THREE-DIMENSIONAL SYSTEMS,
      WITH TEMPERATURE-DEPENDENT THERMAL PROPERTIES,
      SUBJECTED TO A FIRE ENVIRONMENT

*****************************************************************

                    - - - TITLE OF RUN - - -

 *** INTERIOR BASEMENT COLUMN - BLDG STUDY - ASTM FIRE ***

*****************************************************************
```

TABLE B.2 OUTPUT FOR SAMPLE PROBLEM ONE

****

FIRES-T3 - FIRE RESPONSE OF STRUCTURES - THERMAL

*** INTERIOR BASEMENT COLUMN - BLDG STUDY - ASTM FIRE ***

GEOMETRIC DESCRIPTION OF SYSTEM TO BE ANALYZED

****

. . . . THERE ARE 96 NODAL POINTS . . . .

NODAL POINT	COORDINATES X	Y	Z	BOUNDARY CONDITION
1	0.	0.	-0.	FLOW
2	.1667	0.	0.	FLOW
3	.3333	0.	-0.	FLOW
4	.4167	0.	0.	FLOW
5	.5000	0.	0.	FLOW
6	.5833	0.	-0.	FLOW
7	.6142	0.	-0.	FLOW
8	.6667	0.	-0.	FLOW
9	.7083	0.	-0.	FLOW
10	.7500	0.	-0.	FLOW
11	.8333	0.	-0.	FLOW
12	.6142	.0471	-0.	FLOW
13	.6667	.0471	-0.	FLOW
14	.7083	.0471	-0.	FLOW
15	0.	.1667	-0.	FLOW
16	.1667	.1667	0.	FLOW
17	.3333	.1667	-0.	FLOW
18	.4167	.1667	0.	FLOW
19	.5000	.1667	0.	FLOW
20	.5833	.1667	0.	FLOW
21	.6667	.1667	0.	FLOW
22	.7500	.1667	0.	FLOW
23	.8333	.1667	-0.	FLOW
24	0.	.3333	-0.	FLOW
25	.1667	.3333	0.	FLOW
26	.3333	.3333	-0.	FLOW
27	.4167	.3333	0.	FLOW
28	.5000	.3333	0.	FLOW
29	.5833	.3333	0.	FLOW
30	.6667	.3333	0.	FLOW
31	.7500	.3333	0.	FLOW
32	.8333	.3333	-0.	FLOW
33	0.	.4167	-0.	FLOW
34	.1667	.4167	0.	FLOW
35	.3333	.4167	-0.	FLOW
36	.4167	.4167	0.	FLOW
37	.5000	.4167	0.	FLOW
38	.5833	.4167	0.	FLOW

39	.6667	.4167	0.	FLOW
40	.7500	.4167	0.	FLOW
41	.8333	.4167	-0.	FLOW
42	0.	.5000	-0.	FLOW
43	.1667	.5000	0.	FLOW
44	.3333	.5000	-0.	FLOW
45	.4167	.5000	0.	FLOW
46	.5000	.5000	0.	FLOW
47	.5833	.5000	0.	FLOW
48	.6667	.5000	0.	FLOW
49	.7500	.5000	0.	FLOW
50	.8333	.5000	-0.	FLOW
51	0.	.5833	-0.	FLOW
52	.1667	.5833	0.	FLOW
53	.3333	.5833	-0.	FLOW
54	.4167	.5833	0.	FLOW
55	.5000	.5833	-0.	FLOW
56	.5208	.6142	-0.	FLOW
57	.5833	.5833	-0.	FLOW
58	.5833	.6142	-0.	FLOW
59	.6667	.5833	-0.	FLOW
60	.6667	.6142	-0.	FLOW
61	.7083	.6142	-0.	FLOW
62	.7500	.5833	-0.	FLOW
63	.8333	.5833	-0.	FLOW
64	0.	.6667	-0.	FLOW
65	.1667	.6667	0.	FLOW
66	.3333	.6667	-0.	FLOW
67	.4167	.6667	0.	FLOW
68	.5000	.6667	-0.	FLOW
69	.5208	.6667	-0.	FLOW
70	.5833	.6667	-0.	FLOW
71	.6667	.6667	-0.	FLOW
72	.7083	.6667	-0.	FLOW
73	.7500	.6667	-0.	FLOW
74	.8333	.6667	-0.	FLOW
75	0.	.7500	-0.	FLOW
76	.1667	.7500	0.	FLOW
77	.3333	.7500	-0.	FLOW
78	.4167	.7500	0.	FLOW
79	.5000	.7500	-0.	FLOW
80	.5208	.7083	-0.	FLOW
81	.5833	.7500	-0.	FLOW
82	.5833	.7083	-0.	FLOW
83	.6667	.7500	-0.	FLOW
84	.6667	.7083	-0.	FLOW
85	.7083	.7083	-0.	FLOW
86	.7500	.7500	-0.	FLOW
87	.8333	.7500	-0.	FLOW
88	0.	.8333	-0.	FLOW
89	.1667	.8333	0.	FLOW
90	.3333	.8333	-0.	FLOW
91	.4167	.8333	0.	FLOW
92	.5000	.8333	0.	FLOW
93	.5833	.8333	0.	FLOW
94	.6667	.8333	0.	FLOW

95	.7500	.8333	0.	FLCW
96	.8333	.8333	-C.	FLCW

. . . . THERE ARE 78 2-D ELEMENTS . . . .

ELMT	I	J	K	L	MAT	THICKNESS
1	1	2	16	15	1	1.00000
2	2	3	17	16	1	1.CCCCC
3	3	4	18	17	1	1.00000
4	4	5	19	18	1	1.00000
5	5	6	20	19	1	1.0000C
6	6	7	12	20	1	1.00000
7	7	8	13	12	2	1.CCCCC
8	8	9	14	13	2	1.00000
9	9	10	22	14	1	1.C0000
10	10	11	23	22	1	1.CC000
11	12	13	21	20	1	1.00000
12	13	14	22	21	1	1.CCCCC
13	15	16	25	24	1	1.00000
14	16	17	26	25	1	1.C0000
15	17	18	27	26	1	1.CCCCC
16	18	19	28	27	1	1.00000
17	19	20	29	28	1	1.CCCCC
18	20	21	30	29	1	1.00000
19	21	22	31	30	1	1.C0000
20	22	23	32	31	1	1.00000
21	24	25	34	33	1	1.00000
22	25	26	35	34	1	1.CCCCC
23	26	27	36	35	1	1.00000
24	27	28	37	36	1	1.00000
25	28	29	38	37	1	1.00000
26	29	30	39	38	1	1.00000
27	30	31	40	39	1	1.CCCCC
28	31	32	41	40	1	1.CCCCC
29	33	34	43	42	1	1.C0000
30	34	35	44	43	1	1.CCCCC
31	35	36	45	44	1	1.00000
32	36	37	46	45	1	1.CCCCC
33	37	38	47	46	1	1.00000
34	38	39	48	47	1	1.C0000
35	39	40	49	48	1	1.CCCCC
36	40	41	50	49	1	1.00000
37	42	43	52	51	1	1.CCCCC
38	43	44	53	52	1	1.00000
39	44	45	54	53	1	1.00000
40	45	46	55	54	1	1.CCCCC
41	46	47	57	55	1	1.00000
42	47	48	59	57	1	1.00000
43	48	49	62	59	1	1.C0000
44	49	50	63	62	1	1.00000
45	51	52	65	64	1	1.CCCCC
46	52	53	66	65	1	1.00000

47	53	54	67	66	1	1.00000
48	54	55	68	67	1	1.00000
49	55	56	69	68	1	1.00000
50	55	57	58	56	1	1.00000
51	57	59	60	58	1	1.00000
52	59	62	61	60	1	1.00000
53	61	62	73	72	1	1.00000
54	62	63	74	73	1	1.00000
55	56	58	70	69	2	1.00000
56	58	60	71	70	2	1.00000
57	60	61	72	71	2	1.00000
58	69	70	82	80	2	1.00000
59	70	71	84	82	2	1.00000
60	71	72	85	84	2	1.00000
61	64	65	76	75	1	1.00000
62	65	66	77	76	1	1.00000
63	66	67	78	77	1	1.00000
64	67	68	79	78	1	1.00000
65	68	69	80	79	1	1.00000
66	80	82	81	79	1	1.00000
67	82	84	83	81	1	1.00000
68	84	85	86	83	1	1.00000
69	72	73	86	85	1	1.00000
70	73	74	87	86	1	1.00000
71	75	76	89	88	1	1.00000
72	76	77	90	89	1	1.00000
73	77	78	91	90	1	1.00000
74	78	79	92	91	1	1.00000
75	79	81	93	92	1	1.00000
76	81	83	94	93	1	1.00000
77	83	86	95	94	1	1.00000
78	86	87	96	95	1	1.00000

. . . MAXIMUM BANDWIDTH IS 16 . . .

```
*************************************************************
   FIRES-T3  -  FIRE RESPONSE OF STRUCTURES - THERMAL
 *** INTERIOR BASEMENT COLUMN - BLDG STUDY - ASTM FIRE ***
   THERMAL PROPERTIES OF SYSTEM TO BE ANALYZED
   THERE ARE   2 DIFFERENT MATERIALS
*************************************************************


. . . . MATERIAL NUMBER    1  . . . .

      . . . CONDUCTIVITY . . .
   NODE    TEMPERATURE       VALUE        SLOPE
     1          0.          1.010
                                          0.
     2        390.0         1.010
                                          -.40CE-03
     3       1650.0          .506
                                          0.
     4       3000.0          .506

      . . . SPECIFIC HEAT . . .
 MATERIAL PARAMETER OF CONSTANT VALUE     .272

      . . . DENSITY . . .
 MATERIAL PARAMETER OF CONSTANT VALUE 15C.000


. . . . MATERIAL NUMBER    2  . . . .

      . . . CONDUCTIVITY . . .
   NODE    TEMPERATURE       VALUE        SLOPE
     1          0.         3C.000
                                          -.918E-02
     2       1100.0        19.900
                                          0.
     3       3000.0        19.900
```

. . . SPECIFIC HEAT . . .

NODE	TEMPERATURE	VALUE	SLOPE
1	0.	.107	
			.493E-04
2	750.0	.144	
			.800E-04
3	1100.0	.172	
			0.
4	3000.0	.172	

. . . DENSITY . . .

MATERIAL PARAMETER OF CONSTANT VALUE 480.000

```
*************************************************************

    FIRES-T3  -  FIRE RESPONSE OF STRUCTURES - THERMAL

 *** INTERIOR BASEMENT COLUMN - BLDG STUDY - ASTM FIRE ***

    NON-LINEAR FIRE BOUNDARY CONDITION

*************************************************************

Q=A*(TF-TS)**N+SB*V*(AB*EF*(TF+TSHIFT)**4-ES*(TS+TSHIFT)**4)

WHERE
     TF - PSUEDO FIRE TEMPERATURE
     TS - SURFACE TEMPERATURE
     SB - STEFAN BOLZTMANN CONSTANT =     .1700E-08
     TSHIFT - SHIFT TO ABSOLUTE TEMPERATURE SCALE =     460.0
AND
```

MAT NUM	CONVECT FACTOR (A)	CONVECT POWER (N)	VIEW FACTOR (V)	ABSORBT (AB)	FIRE EMISSIV (EF)	SURFACE EMISSIV (ES)
1	.270	1.250	1.000	.900	.300	.900

. . . THERE ARE 16 2-D SURFACE ELEMENTS EXPOSED TO FIRE . .

DESCRIPTION OF SURFACE DIRECTLY EXPOSED TO FIRE

FIREBC SURFACE	NODE I	NODE J	MAT TYPE	FIRE TYPE	AREA
1	11	23	1	1	.167
2	23	32	1	1	.167
3	32	41	1	1	.083
4	41	50	1	1	.083
5	50	63	1	1	.083
6	63	74	1	1	.083
7	74	87	1	1	.083
8	87	96	1	1	.083
9	96	95	1	1	.083
10	95	94	1	1	.083
11	94	93	1	1	.083
12	93	92	1	1	.083
13	92	91	1	1	.083
14	91	90	1	1	.083
15	90	89	1	1	.167
16	89	88	1	1	.167

```
*************************************************************
   FIRES-T3  -  FIRE RESPONSE OF STRUCTURES - THERMAL
 *** INTERIOR BASEMENT COLUMN - BLDG STUDY - ASTM FIRE ***
   INFORMATION RELEVANT TO THE ANALYSIS PROCEDURE
*************************************************************


 . . . . CONVERGENCE CRITERIA . . . .

 CONVERGENCE CRITERIA FOR BOUNDARY CONDITIONS

   PERMISSIBLE ERROR =     .00500
   MAXIMUM NUMBER OF ITERATIONS =   15      BETA =     -.2500


 . . . . STORAGE REQUIREMENT FOR BLANK COMMON . . . .

   SIZE BLANK COMMON =        3390 (DECIMAL)
                     =     0006476 (OCTAL)
```

```
*************************************************************
    FIRES-T3  -  FIRE RESPONSE OF STRUCTURES - THERMAL
 *** INTERIOR BASEMENT COLUMN - BLDG STUDY - ASTM FIRE ***
INITIAL SEQUENCE NUMBER IS     0 AND INITIAL TIME IS      0.
*************************************************************
```

---------- NODAL POINT TEMPERATURES ----------

N	TEMP.	N	TEMP.	N	TEMP.	N	TEMP.
1	68.00	2	68.00	3	68.00	4	68.00
5	68.00	6	68.00	7	68.00	8	68.00
9	68.00	10	68.00	11	68.00	12	68.00
13	68.00	14	68.00	15	68.00	16	68.00
17	68.00	18	68.00	19	68.00	20	68.00
21	68.00	22	68.00	23	68.00	24	68.00
25	68.00	26	68.00	27	68.00	28	68.00
29	68.00	30	68.00	31	68.00	32	68.00
33	68.00	34	68.00	35	68.00	36	68.00
37	68.00	38	68.00	39	68.00	40	68.00
41	68.00	42	68.00	43	68.00	44	68.00
45	68.00	46	68.00	47	68.00	48	68.00
49	68.00	50	68.00	51	68.00	52	68.00
53	68.00	54	68.00	55	68.00	56	68.00
57	68.00	58	68.00	59	68.00	60	68.00
61	68.00	62	68.00	63	68.00	64	68.00
65	68.00	66	68.00	67	68.00	68	68.00
69	68.00	70	68.00	71	68.00	72	68.00
73	68.00	74	68.00	75	68.00	76	68.00
77	68.00	78	68.00	79	68.00	80	68.00
81	68.00	82	68.00	83	68.00	84	68.00
85	68.00	86	68.00	87	68.00	88	68.00
89	68.00	90	68.00	91	68.00	92	68.00
93	68.00	94	68.00	95	68.00	96	68.00

```
*************************************************************

    FIRES-T3  -  FIRE RESPONSE OF STRUCTURES - THERMAL

 *** INTERIOR BASEMENT COLUMN - BLDG STUDY - ASTM FIRE ***

 TIME STEP NUMBER     1 - TIME     .025 - TIME STEP     .025

*************************************************************

     NUMBER OF NON-ZERO FLOW OR TEMPERATURE CONDITIONS    -0

     FIRE BOUNDARY CONDITION
      FIRE(1) =     347.600
      FIRE(2) =      -0.
      FIRE(3) =      -0.
      FIRE(4) =      -0.
```

---------- NODAL POINT TEMPERATURES ----------

N	TEMP.	N	TEMP.	N	TEMP.	N	TEMP.
1	68.00	2	68.00	3	68.00	4	68.00
5	68.00	6	68.01	7	68.03	8	68.03
9	68.04	10	68.47	11	72.74	12	68.02
13	68.03	14	68.05	15	68.00	16	68.00
17	68.00	18	68.00	19	68.00	20	68.00
21	68.03	22	68.37	23	72.73	24	68.00
25	68.00	26	68.00	27	68.00	28	68.00
29	68.00	30	68.03	31	68.36	32	72.73
33	68.00	34	68.00	35	68.00	36	68.00
37	68.00	38	68.00	39	68.03	40	68.36
41	72.73	42	68.00	43	68.00	44	68.00
45	68.00	46	68.00	47	68.00	48	68.03
49	68.36	50	72.73	51	68.00	52	68.00
53	68.00	54	68.00	55	68.01	56	68.04
57	68.01	58	68.04	59	68.03	60	68.06
61	68.08	62	68.37	63	72.73	64	68.03
65	68.03	66	68.03	67	68.03	68	68.02
69	68.05	70	68.05	71	68.07	72	68.07
73	68.47	74	72.76	75	68.36	76	68.36
77	68.36	78	68.36	79	68.37	80	68.07
81	68.43	82	68.06	83	68.45	84	68.07
85	68.10	86	68.73	87	73.05	88	72.73
89	72.73	90	72.73	91	72.73	92	72.73
93	72.74	94	72.76	95	73.05	96	77.32

---------- TEMPERATURE OF 2-D ELEMENTS ----------

N	TEMP.	N	TEMP.	N	TEMP.	N	TEMP.
1	68.00	2	68.00	3	68.00	4	68.00
5	68.00	6	68.01	7	68.03	8	68.04

9	68.23	10	70.58	11	68.02	12	68.12
13	68.00	14	68.00	15	68.00	16	68.00
17	68.00	18	68.01	19	68.20	20	70.55
21	68.00	22	68.00	23	68.00	24	68.00
25	68.00	26	68.01	27	68.19	28	70.54
29	68.00	30	68.00	31	68.00	32	68.00
33	68.00	34	68.01	35	68.19	36	70.54
37	68.00	38	68.00	39	68.00	40	68.00
41	68.01	42	68.02	43	68.20	44	70.55
45	68.01	46	68.01	47	68.01	48	68.01
49	68.03	50	68.03	51	68.04	52	68.13
53	68.25	54	70.58	55	68.05	56	68.06
57	68.07	58	68.06	59	68.06	60	68.08
61	68.19	62	68.19	63	68.19	64	68.20
65	68.13	66	68.23	67	68.25	68	68.34
69	68.34	70	70.75	71	70.54	72	70.54
73	70.54	74	70.55	75	70.57	76	70.60
77	70.75	78	73.04				

. . . . PUNCHING ELEMENT DATA . . . .

0 SYSTEM ITERATIONS WERE PERFORMED
3 B. C. ITERATIONS WERE PERFORMED

```
*************************************************************

    FIRES-T3  -  FIRE RESPONSE OF STRUCTURES - THERMAL

 *** INTERIOR BASEMENT COLUMN - BLDG STUDY - ASTM FIRE ***

 TIME STEP NUMBER     2 - TIME     .050 - TIME STEP     .025

*************************************************************

     NUMBER OF NON-ZERO FLOW OR TEMPERATURE CONDITIONS    -0

     FIRE BOUNDARY CONDITION
      FIRE(1) =     627.200
      FIRE(2) =      -0.
      FIRE(3) =      -0.
      FIRE(4) =      -0.
```

---------- NODAL POINT TEMPERATURES ----------

N	TEMP.	N	TEMP.	N	TEMP.	N	TEMP.
1	68.00	2	68.00	3	68.00	4	68.00
5	68.00	6	68.04	7	68.15	8	68.20
9	68.24	10	70.27	11	87.40	12	68.14
13	68.19	14	68.29	15	68.00	16	68.00
17	68.00	18	68.00	19	68.00	20	68.02
21	68.16	22	69.81	23	87.37	24	68.00
25	68.00	26	68.00	27	68.00	28	68.00
29	68.01	30	68.16	31	69.78	32	87.35
33	68.00	34	68.00	35	68.00	36	68.00
37	68.00	38	68.01	39	68.16	40	69.78
41	87.35	42	68.00	43	68.00	44	68.00
45	68.00	46	68.00	47	68.02	48	68.16
49	69.78	50	87.35	51	68.01	52	68.01
53	68.01	54	68.01	55	68.05	56	68.23
57	68.08	58	68.26	59	68.15	60	68.34
61	68.42	62	69.85	63	87.38	64	68.16
65	68.16	66	68.16	67	68.16	68	68.13
69	68.28	70	68.30	71	68.37	72	68.42
73	70.28	74	87.51	75	69.78	76	69.78
77	69.78	78	69.78	79	69.83	80	68.36
81	70.11	82	68.33	83	70.22	84	68.41
85	68.55	86	71.61	87	88.92	88	87.35
89	87.35	90	87.35	91	87.35	92	87.37
93	87.40	94	87.52	95	88.91	96	105.94

---------- TEMPERATURE OF 2-D ELEMENTS ----------

N	TEMP.	N	TEMP.	N	TEMP.	N	TEMP.
1	68.00	2	68.00	3	68.00	4	68.00
5	68.02	6	68.09	7	68.17	8	68.23

9	69.15	10	78.71	11	68.12	12	68.61
13	68.00	14	68.00	15	68.00	16	68.00
17	68.01	18	68.09	19	68.98	20	78.58
21	68.00	22	68.00	23	68.00	24	68.00
25	68.01	26	68.09	27	68.97	28	78.56
29	68.00	30	68.00	31	68.00	32	68.00
33	68.01	34	68.09	35	68.97	36	78.57
37	68.01	38	68.01	39	68.01	40	68.02
41	68.04	42	68.10	43	68.99	44	78.59
45	68.09	46	68.09	47	68.09	48	68.09
49	68.17	50	68.15	51	68.21	52	68.69
53	69.24	54	78.75	55	68.27	56	68.32
57	68.39	58	68.32	59	68.35	60	68.44
61	68.97	62	68.97	63	68.97	64	68.98
65	68.65	66	69.16	67	69.27	68	69.70
69	69.71	70	79.58	71	78.56	72	78.56
73	78.56	74	78.58	75	78.68	76	78.81
77	79.57	78	88.84				

. . . . PUNCHING ELEMENT DATA . . . .

0 SYSTEM ITERATIONS WERE PERFORMED
3 B. C. ITERATIONS WERE PERFORMED

```
*************************************************************

    FIRES-T3  -  FIRE RESPONSE OF STRUCTURES - THERMAL

 *** INTERIOR BASEMENT COLUMN - BLDG STUDY - ASTM FIRE ***

 TIME STEP NUMBER    3 - TIME    .075 - TIME STEP    .025

*************************************************************

     NUMBER OF NON-ZERO FLOW OR TEMPERATURE CONDITIONS    -0

     FIRE BOUNDARY CONDITION
      FIRE(1) =     906.800
      FIRE(2) =      -0.
      FIRE(3) =      -0.
      FIRE(4) =      -0.
```

---------- NODAL POINT TEMPERATURES ----------

N	TEMP.	N	TEMP.	N	TEMP.	N	TEMP.
1	68.00	2	68.00	3	68.00	4	68.00
5	68.01	6	68.16	7	68.52	8	68.66
9	68.79	10	74.58	11	117.37	12	68.47
13	68.63	14	68.95	15	68.00	16	68.00
17	68.00	18	68.00	19	68.01	20	68.06
21	68.53	22	73.37	23	117.27	24	68.00
25	68.00	26	68.00	27	68.00	28	68.01
29	68.05	30	68.54	31	73.27	32	117.21
33	68.00	34	68.00	35	68.00	36	68.00
37	68.01	38	68.05	39	68.54	40	73.28
41	117.21	42	68.01	43	68.01	44	68.01
45	68.01	46	68.02	47	68.07	48	68.55
49	73.28	50	117.22	51	68.05	52	68.05
53	68.05	54	68.05	55	68.18	56	68.78
57	68.29	58	68.90	59	68.54	60	69.13
61	69.37	62	73.45	63	117.32	64	68.54
65	68.54	66	68.54	67	68.54	68	68.46
69	68.94	70	69.00	71	69.24	72	69.37
73	74.66	74	117.73	75	73.27	76	73.27
77	73.27	78	73.28	79	73.39	80	69.19
81	74.15	82	69.10	83	74.52	84	69.35
85	69.75	86	78.60	87	121.75	88	117.21
89	117.21	90	117.21	91	117.22	92	117.28
93	117.36	94	117.77	95	121.75	96	163.90

---------- TEMPERATURE OF 2-D ELEMENTS ----------

N	TEMP.	N	TEMP.	N	TEMP.	N	TEMP.
1	68.00	2	68.00	3	68.00	4	68.01
5	68.06	6	68.30	7	68.57	8	68.76

9	71.42	10	95.65	11	68.42	12	69.87
13	68.00	14	68.00	15	68.00	16	68.00
17	68.03	18	68.30	19	70.93	20	95.28
21	68.00	22	68.00	23	68.00	24	68.00
25	68.03	26	68.30	27	70.91	28	95.24
29	68.00	30	68.00	31	68.00	32	68.01
33	68.04	34	68.30	35	70.91	36	95.25
37	68.03	38	68.03	39	68.03	40	68.06
41	68.14	42	68.36	43	70.96	44	95.32
45	68.30	46	68.30	47	68.30	48	68.31
49	68.59	50	68.54	51	68.72	52	70.12
53	71.71	54	95.79	55	68.90	56	69.07
57	69.28	58	69.06	59	69.17	60	69.42
61	70.91	62	70.91	63	70.91	64	70.92
65	70.00	66	71.46	67	71.78	68	73.05
69	73.09	70	98.19	71	95.24	72	95.24
73	95.25	74	95.29	75	95.55	76	95.95
77	98.16	78	121.50				

. . . . PUNCHING ELEMENT DATA . . . .

0 SYSTEM ITERATIONS WERE PERFORMED
3 B. C. ITERATIONS WERE PERFORMED

```
*************************************************************

    FIRES-T3  -  FIRE RESPONSE OF STRUCTURES - THERMAL

 *** INTERIOR BASEMENT COLUMN - BLDG STUDY - ASTM FIRE ***

 TIME STEP NUMBER     4 - TIME     .100 - TIME STEP     .025

*************************************************************

     NUMBER OF NON-ZERO FLOW OR TEMPERATURE CONDITIONS    -0

     FIRE BOUNDARY CONDITION
      FIRE(1) =    1060.000
      FIRE(2) =      -0.
      FIRE(3) =      -0.
      FIRE(4) =      -0.
```

---------- NODAL POINT TEMPERATURES ----------

N	TEMP.	N	TEMP.	N	TEMP.	N	TEMP.
1	68.00	2	68.00	3	68.00	4	68.00
5	68.03	6	68.43	7	69.29	8	69.59
9	69.86	10	81.66	11	156.38	12	69.18
13	69.54	14	70.21	15	68.00	16	68.00
17	68.00	18	68.00	19	68.02	20	68.17
21	69.29	22	79.41	23	156.16	24	68.00
25	68.00	26	68.00	27	68.00	28	68.02
29	68.15	30	69.32	31	79.23	32	156.02
33	68.00	34	68.00	35	68.00	36	68.00
37	68.02	38	68.15	39	69.32	40	79.24
41	156.02	42	68.02	43	68.02	44	68.02
45	68.03	46	68.06	47	68.19	48	69.35
49	79.26	50	156.05	51	68.15	52	68.15
53	68.15	54	68.15	55	68.48	56	69.95
57	68.78	58	70.22	59	69.38	60	70.73
61	71.23	62	79.56	63	156.27	64	69.32
65	69.32	66	69.32	67	69.33	68	69.21
69	70.28	70	70.43	71	70.96	72	71.23
73	82.00	74	157.24	75	79.23	76	79.23
77	79.23	78	79.24	79	79.40	80	70.81
81	80.89	82	70.64	83	81.71	84	71.20
85	72.03	86	90.37	87	165.46	88	156.02
89	156.02	90	156.02	91	156.03	92	156.16
93	156.36	94	157.32	95	165.44	96	238.09

---------- TEMPERATURE OF 2-D ELEMENTS ----------

N	TEMP.	N	TEMP.	N	TEMP.	N	TEMP.
1	68.00	2	68.00	3	68.00	4	68.02
5	68.16	6	68.76	7	69.40	8	69.80

9	75.29	10	118.40	11	69.04	12	72.11
13	68.00	14	68.00	15	68.00	16	68.01
17	68.09	18	68.73	19	74.31	20	117.70
21	68.00	22	68.00	23	68.00	24	68.01
25	68.08	26	68.74	27	74.28	28	117.63
29	68.01	30	68.01	31	68.01	32	68.03
33	68.10	34	68.75	35	74.29	36	117.64
37	68.08	38	68.08	39	68.09	40	68.18
41	68.38	42	68.92	43	74.39	44	117.78
45	68.73	46	68.73	47	68.74	48	68.79
49	69.48	50	69.36	51	69.78	52	72.73
53	76.01	54	118.77	55	70.22	56	70.58
57	71.04	58	70.54	59	70.80	60	71.35
61	74.28	62	74.28	63	74.28	64	74.30
65	72.43	66	75.44	67	76.11	68	78.83
69	78.91	70	123.77	71	117.62	72	117.63
73	117.63	74	117.71	75	118.20	76	119.07
77	123.71	78	164.84				

. . . . PUNCHING ELEMENT DATA . . . .

0 SYSTEM ITERATIONS WERE PERFORMED
3 B. C. ITERATIONS WERE PERFORMED

```
*************************************************************

    FIRES-T3  -  FIRE RESPONSE OF STRUCTURES - THERMAL

 *** INTERIOR BASEMENT COLUMN - BLDG STUDY - ASTM FIRE ***

 TIME STEP NUMBER     5 - TIME     .125 - TIME STEP     .025

*************************************************************

     NUMBER OF NON-ZERO FLOW OR TEMPERATURE CONDITIONS    -0

     FIRE BOUNDARY CONDITION
      FIRE(1) =    1150.000
      FIRE(2) =      -0.
      FIRE(3) =      -0.
      FIRE(4) =      -0.
```

---------- NODAL POINT TEMPERATURES ----------

N	TEMP.	N	TEMP.	N	TEMP.	N	TEMP.
1	68.00	2	68.00	3	68.00	4	68.01
5	68.08	6	68.94	7	70.59	8	71.13
9	71.59	10	91.21	11	199.03	12	70.38
13	71.04	14	72.19	15	68.00	16	68.00
17	68.00	18	68.01	19	68.06	20	68.37
21	70.58	22	87.87	23	198.64	24	68.00
25	68.00	26	68.00	27	68.01	28	68.04
29	68.32	30	70.64	31	87.60	32	198.41
33	68.00	34	68.00	35	68.01	36	68.01
37	68.05	38	68.34	39	70.63	40	87.60
41	198.41	42	68.04	43	68.04	44	68.04
45	68.07	46	68.14	47	68.43	48	70.71
49	87.65	50	198.46	51	68.32	52	68.33
53	68.33	54	68.35	55	69.06	56	71.93
57	69.69	58	72.43	59	70.85	60	73.35
61	74.21	62	88.10	63	198.87	64	70.62
65	70.62	66	70.63	67	70.66	68	70.56
69	72.53	70	72.80	71	73.75	72	74.23
73	92.09	74	200.71	75	87.60	76	87.60
77	87.60	78	87.61	79	87.74	80	73.43
81	90.11	82	73.16	83	91.64	84	74.16
85	75.59	86	106.61	87	214.40	88	198.40
89	198.40	90	198.40	91	198.43	92	198.65
93	199.02	94	200.84	95	214.37	96	317.37

---------- TEMPERATURE OF 2-D ELEMENTS ----------

N	TEMP.	N	TEMP.	N	TEMP.	N	TEMP.
1	68.00	2	68.00	3	68.00	4	68.04
5	68.36	6	69.57	7	70.78	8	71.48

9	80.71	10	144.19	11	70.09	12	75.42
13	68.00	14	68.00	15	68.00	16	68.03
17	68.20	18	69.48	19	79.17	20	143.13
21	68.00	22	68.00	23	68.01	24	68.03
25	68.19	26	69.48	27	79.12	28	143.00
29	68.02	30	68.02	31	68.03	32	68.07
33	68.24	34	69.53	35	79.15	36	143.03
37	68.18	38	68.18	39	68.20	40	68.41
41	68.83	42	69.92	43	79.33	44	143.27
45	69.47	46	69.48	47	69.49	48	69.66
49	71.02	50	70.78	51	71.58	52	76.63
53	82.16	54	144.94	55	72.42	56	73.08
57	73.88	58	72.98	59	73.46	60	74.43
61	79.11	62	79.11	63	79.12	64	79.14
65	76.06	66	81.11	67	82.27	68	87.00
69	87.13	70	153.45	71	143.00	72	143.00
73	143.01	74	143.11	75	143.88	76	145.40
77	153.36	78	213.19				

. . . . PUNCHING ELEMENT DATA . . . .

0 SYSTEM ITERATIONS WERE PERFORMED
3 B. C. ITERATIONS WERE PERFORMED

SAMPLE PROBLEM 2 - COLUMN WITH SPIRAL

The second sample problem is a circular column with longitudinal and spiral reinforcing which is uniformly exposed to fire. The dimensions and configuration of the column are shown in Fig. B.6. The column is subjected to each of the two fire curves discussed in the previous sample problem, the ASTM E-119 long-duration, moderate intensity fire (Fig. B.3) and the SDHI short-duration, high intensity fire (Fig. B.4). The fire boundary is modeled nonlinearly as in the previous sample problem. Both material properties and the boundary properties are given in the sample output in Table B.4.

For each fire curve two analyses are made:

1. A three-dimensional thermal analysis which is capable of modeling the effect spiral reinforcing has on heat flow into the column's interior. Due to symmetry only the wedge-shaped portion shown in Fig. B.6 need be discretized into elements. The mesh chosen is shown in Fig. B.7. Both the input data (Table B.3) and the output (Table B.4) is given for the first three time steps of the SDHI fire analysis. The temperature distribution within the column after one hour of fire exposure is shown in Fig. B.8.

2. A two-dimensional thermal analysis which ignores the effect of the spiral steel on heat flow into the column's interior. A mesh of two-dimensional quadrilateral elements which is equivalent to the three-dimensional mesh is defined by the top surface of the wedge-shaped mesh in Fig. B.7. The temperature distribution within the column after one hour of fire exposure is shown in Fig. B.9.

The time-temperature history of the longitudinal reinforcing bars is shown in Fig. B.10 for each of the four analyses conducted. Note that the steel spiral does considerably affect heat conduction into the interior of the column.

The SDHI fire analyses required 80 time steps for two hours duration. The three-dimensional analysis needed 902 seconds of central processing time (CDC 6400) and the two-dimensional analysis 62 seconds. For the ASTM fire, 120 time steps were needed for a two hour analysis. The three-dimensional case consumed 1520 seconds of central processing time and the two-dimensional case 105 seconds.

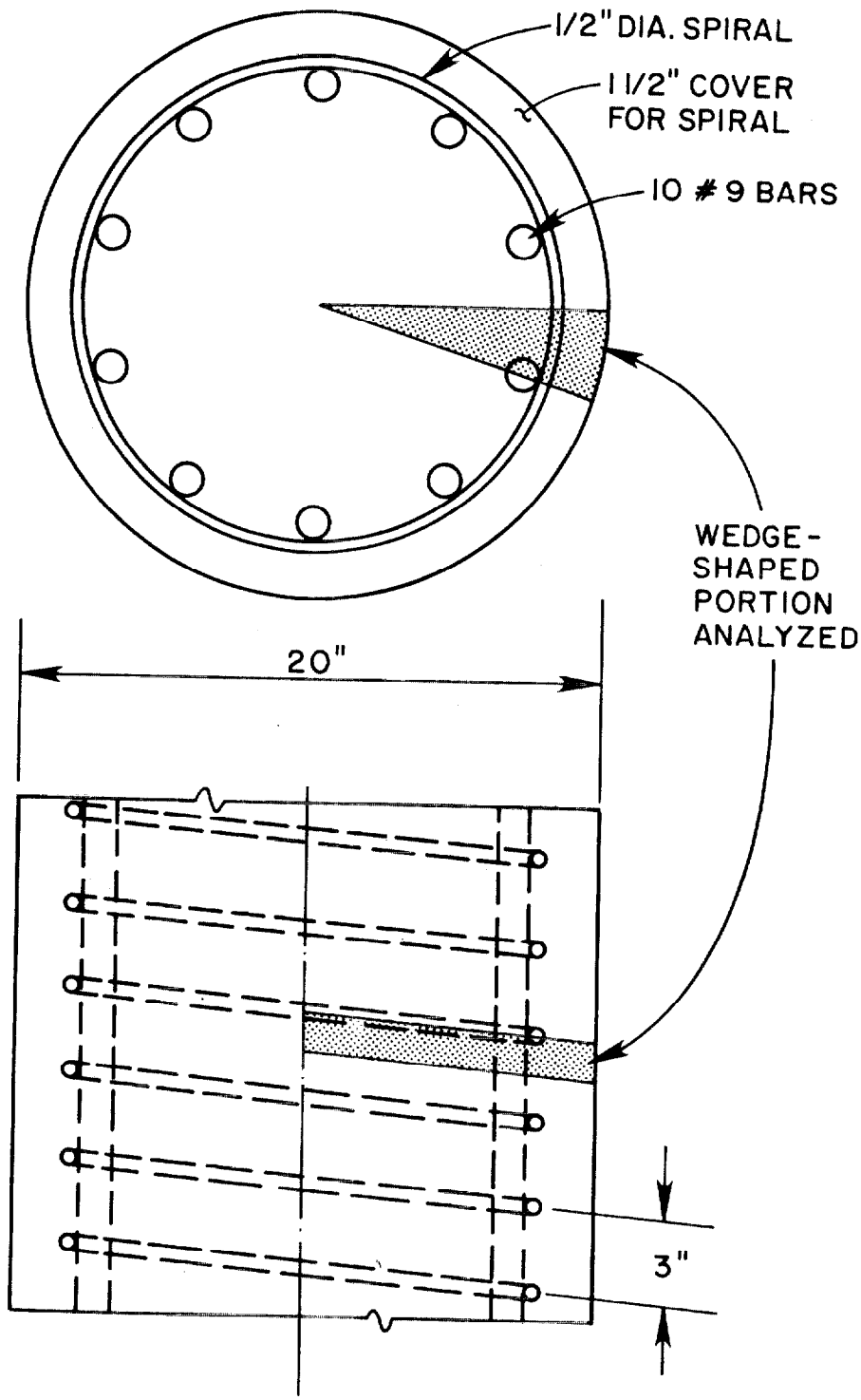

FIGURE B.6 CROSS-SECTIONS OF CIRCULAR COLUMN

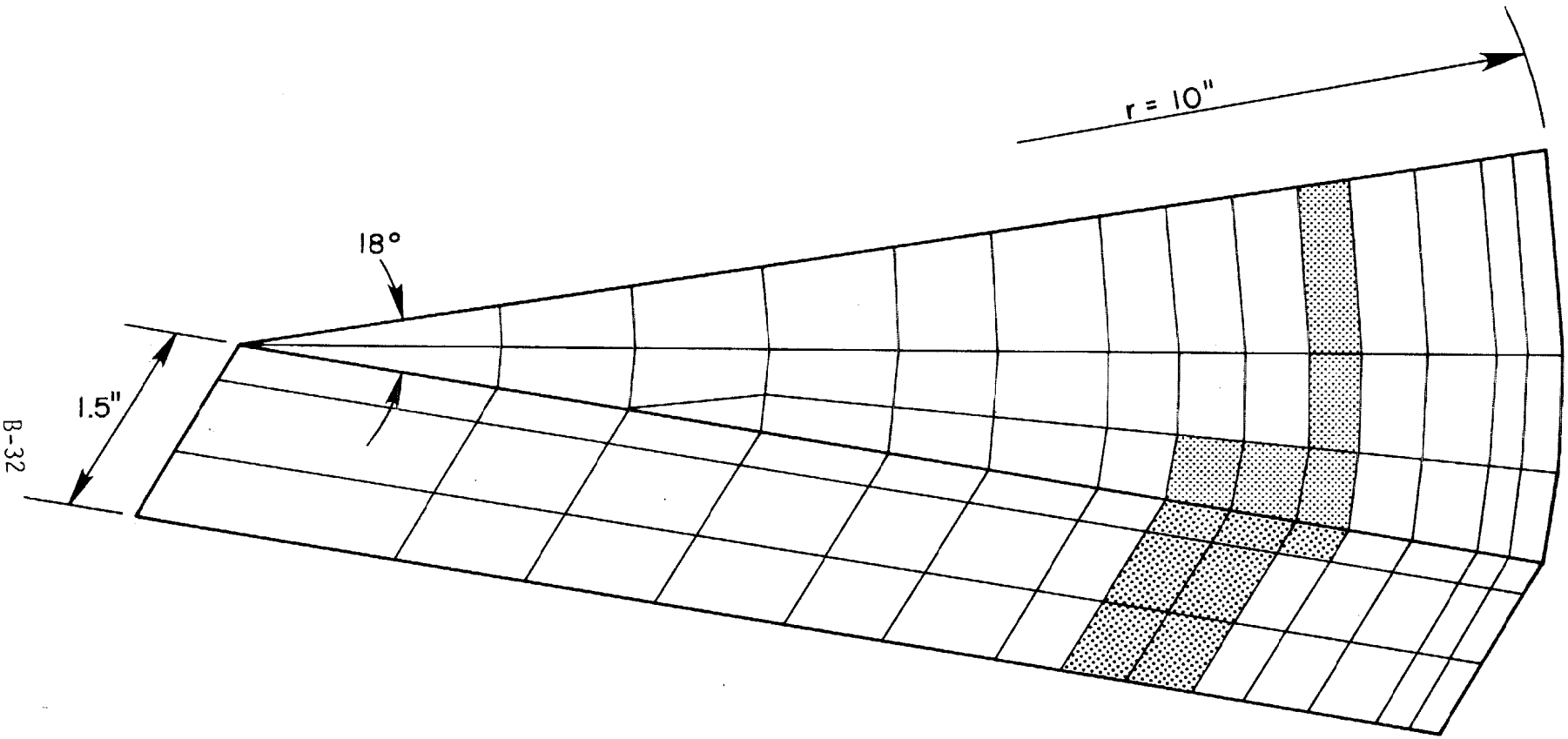

FIGURE B.7 THREE-DIMENSIONAL MESH FOR CIRCULAR COLUMN (WEDGE)

(ISOTHERMS PLOTTED FOR CROSS-SECTION THROUGH SPIRAL)

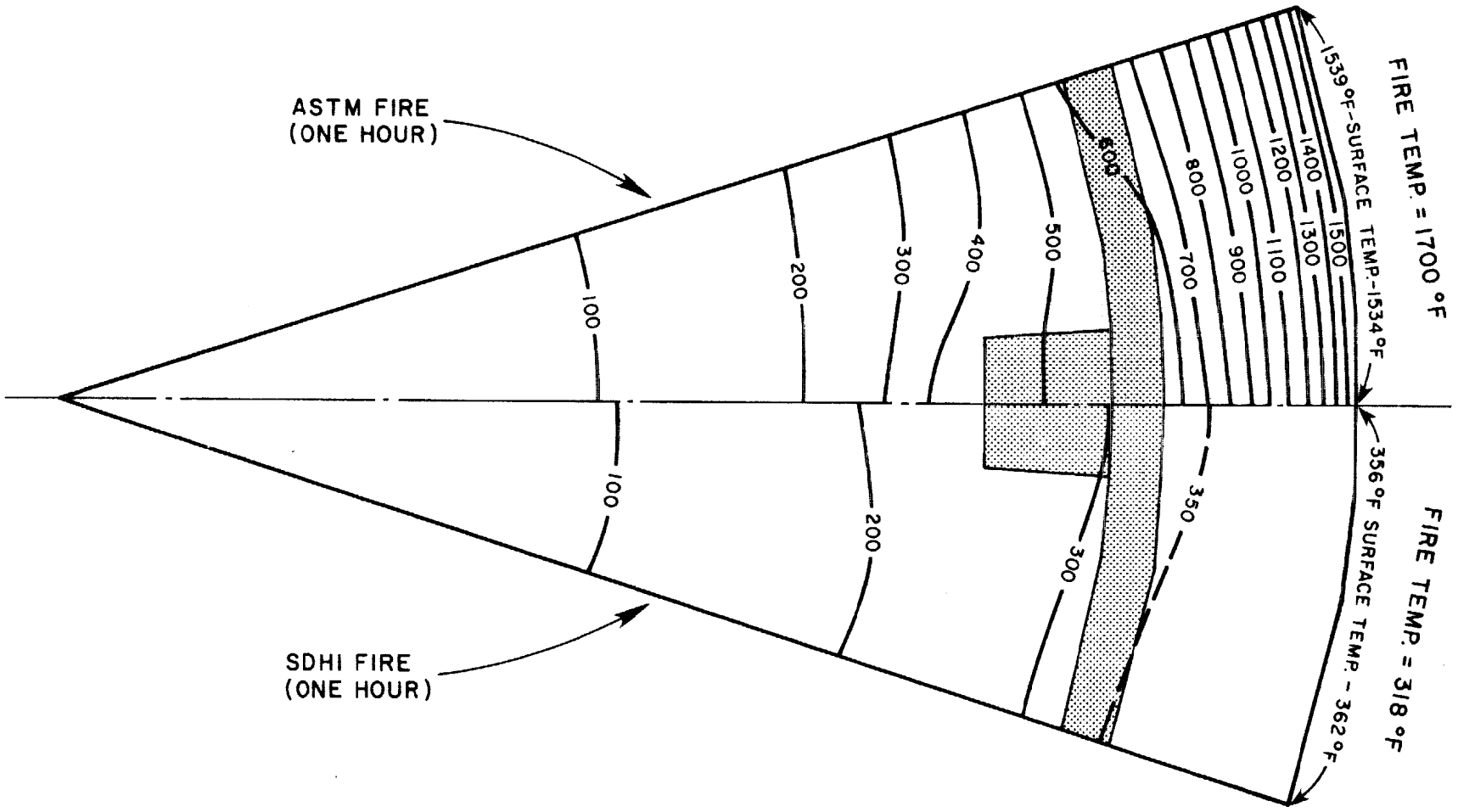

FIGURE B.8 ISOTHERMS IN CROSS-SECTION - THREE-DIMENSIONAL ANALYSIS WHICH INCLUDES EFFECT OF SPIRAL REINFORCING

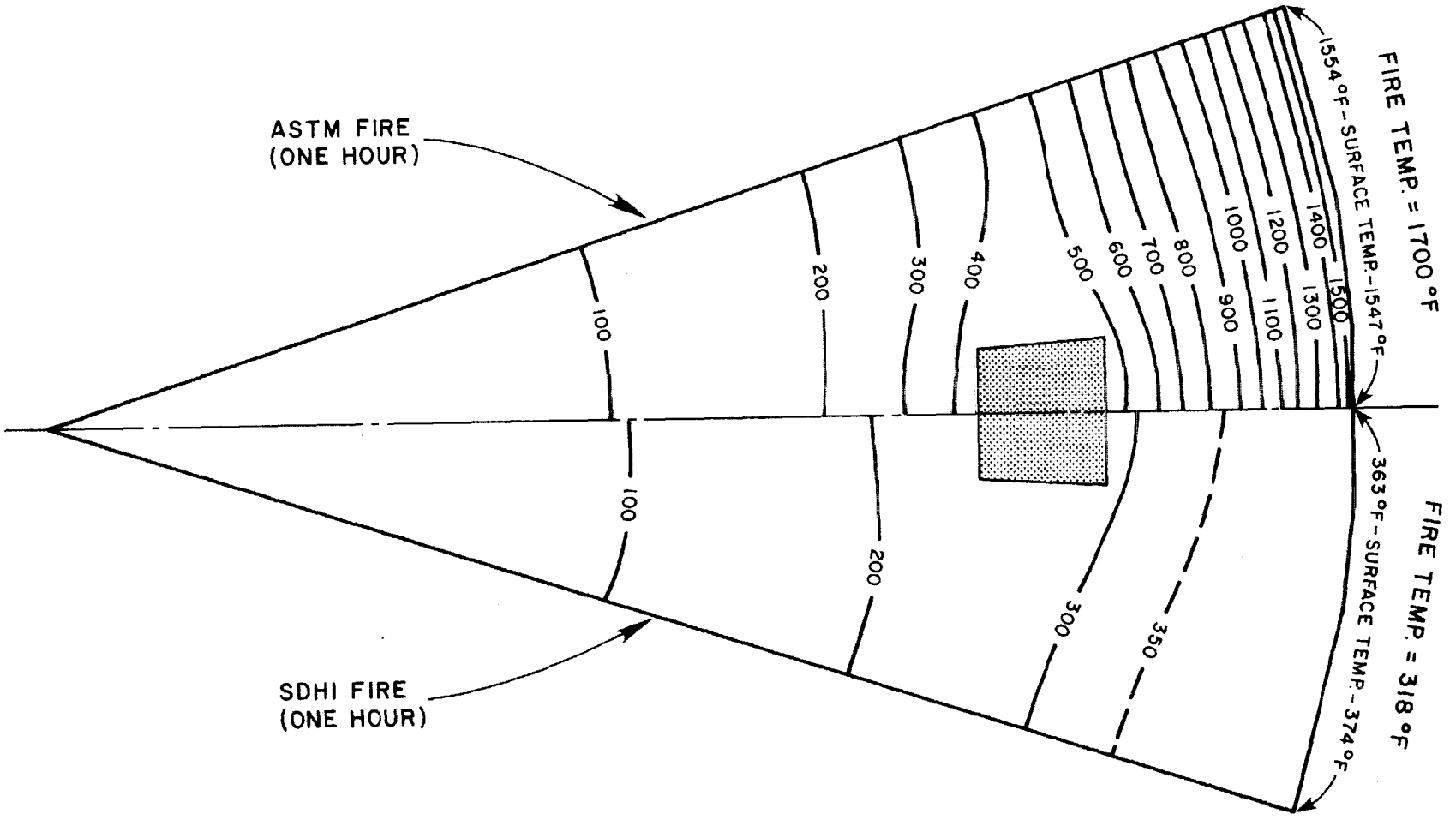

FIGURE B.9 ISOTHERMS IN CROSS-SECTION - TWO-DIMENSIONAL ANALYSIS WHICH IGNORES EFFECT OF SPIRAL REINFORCING

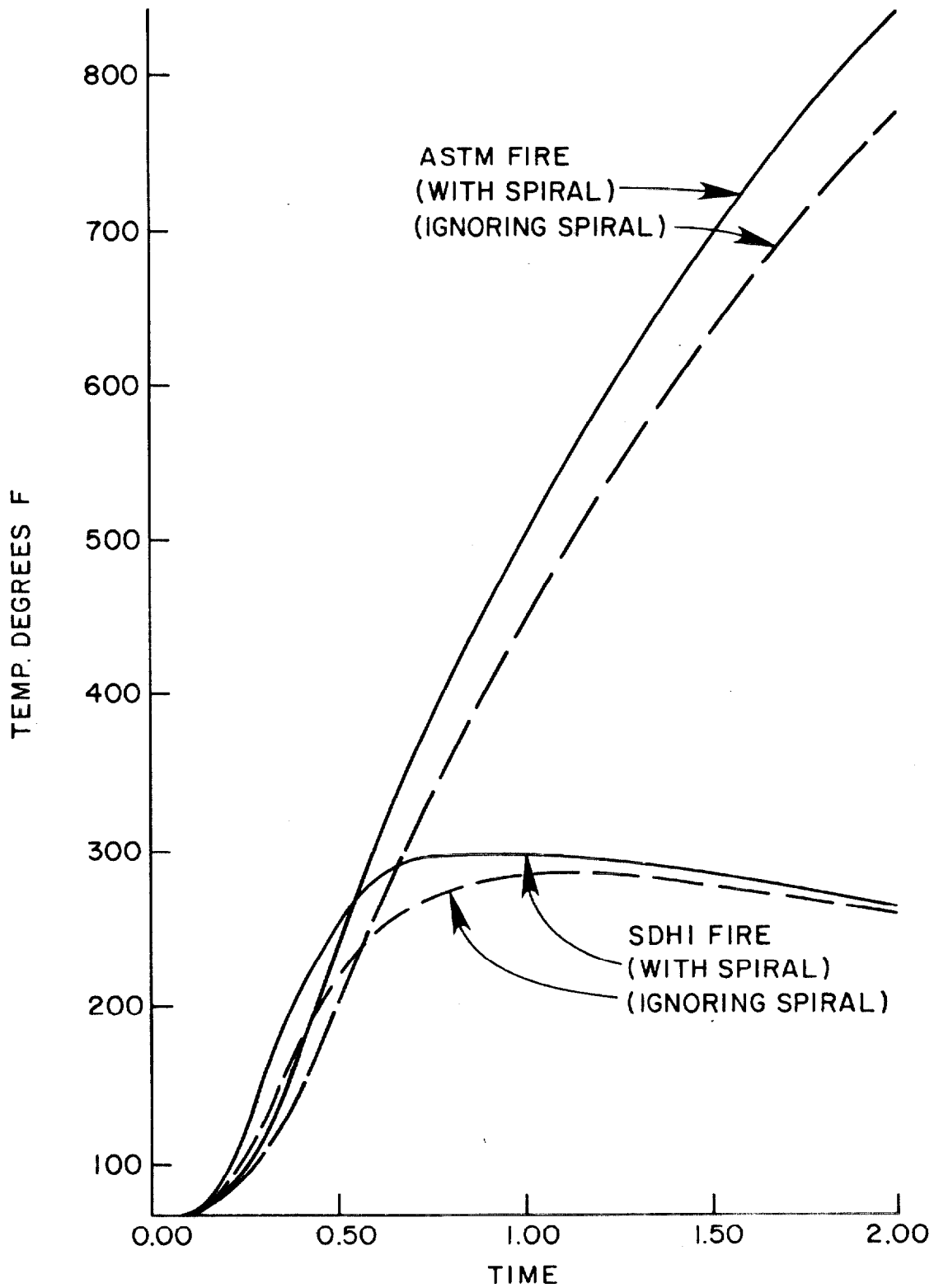

FIGURE B.10 TEMPERATURE-TIME HISTORY IN REINFORCING BARS (AT CENTER OF BAR AT LEVEL OF SPIRAL)

```
         10        20        30        40
** CIRCULAR COLUMN WITH 1/2 INCH SPIRAL - 3-D ANALYSIS **
NODES,220,0
    1    0.        0.        0.
    3    0.        0.        .1042
    4    0.        0.        .1250
    5    .1646     -.0261    0.
    7    .1646     -.0261    .1042
    8    .1646     -.0261    .1250
    9    .1667     0.        0.
   11    .1667     0.        .1042
   12    .1667     0.        .1250
   13    .1646     .0261     0.
   15    .1646     .0261     .1042
   16    .1646     .0261     .1250
   17    .2469     -.0391    0.
   19    .2469     -.0391    .1042
   20    .2469     -.0391    .1250
   21    .2500     0.        0.
   23    .2500     0.        .1042
   24    .2500     0.        .1250
   25    .2469     .0391     0.
   27    .2469     .0391     .1042
   28    .2469     .0391     .1250
   29    .3292     -.0522    0.
   31    .3292     -.0522    .1042
   32    .3292     -.0522    .1250
   33    .3320     -.0302    0.
   35    .3320     -.0302    .1042
   36    .3320     -.0302    .1250
   37    .3333     0.        0.
   39    .3333     0.        .1042
   40    .3333     0.        .1250
   41    .3292     .0522     0.
   43    .3292     .0522     .1042
   44    .3292     .0522     .1250
   45    .4115     -.0652    0.
   47    .4115     -.0652    .1042
   48    .4115     -.0652    .1250
   49    .4149     -.0377    0.
   51    .4149     -.0377    .1042
   52    .4149     -.0377    .1250
   53    .4167     0.        0.
   55    .4167     0.        .1042
   56    .4167     0.        .1250
   57    .4115     .0652     0.
   59    .4115     .0652     .1042
   60    .4115     .0652     .1250
   61    .4733     -.0749    0.
   63    .4733     -.0749    .1042
   64    .4733     -.0749    .1250
   65    .4772     -.0434    0.
   67    .4772     -.0434    .1042
   68    .4772     -.0434    .1250
   69    .4792     0.        0.
   71    .4792     0.        .1042
         10        20        30        40
```

TABLE B.3 INPUT FOR SAMPLE PROBLEM TWO

	10	20	30	40
72	.4792	0.		.1250
73	.4733	.0749	0.	
75	.4733	.0749		.1042
76	.4733	.0749		.1250
77	.5350	-.0848	0.	
79	.5350	-.0848		.1042
80	.5350	-.0848		.1250
81	.5394	-.0492	0.	
83	.5394	-.0492		.1042
84	.5394	-.0492		.1250
85	.5417	0.	0.	
87	.5417	0.		.1042
88	.5417	0.		.1250
89	.5350	.0848	0.	
91	.5350	.0848		.1042
92	.5350	.0848		.1250
93	.5850	-.0927	0.	
95	.5850	-.0927		.1042
96	.5850	-.0927		.1250
97	.5899	-.0537	0.	
99	.5899	-.0537		.1042
100	.5899	-.0537		.1250
101	.5923	0.	0.	
103	.5923	0.		.1042
104	.5923	0.		.1250
105	.5850	.0927	0.	
107	.5850	.0927		.1042
108	.5850	.0927		.1250
109	.6262	-.0992	0.	
111	.6262	-.0992		.1042
112	.6262	-.0992		.1250
113	.6314	-.0575	0.	
115	.6314	-.0575		.1042
116	.6314	-.0575		.1250
117	.6340	0.	0.	
119	.6340	0.		.1042
120	.6340	0.		.1250
121	.6262	.0992	0.	
123	.6262	.0992		.1042
124	.6262	.0992		.1250
125	.6673	-.1057	0.	
127	.6673	-.1057		.1042
128	.6673	-.1057		.1250
129	.6729	-.0613	0.	
131	.6729	-.0613		.1042
132	.6729	-.0613		.1250
133	.6757	0.	0.	
135	.6757	0.		.1042
136	.6757	0.		.1250
137	.6673	.1057	0.	
139	.6673	.1057		.1042
140	.6673	.1057		.1250
141	.6996	-.1108	0.	
143	.6996	-.1108		.1042
144	.6996	-.1108		.1250
145	.7054	-.0642	0.	
	10	20	30	40

	10	20	30	40
147	.7054	-.0642		.1042
148	.7054	-.0642		.1250
149	.7083	0.	0.	
151	.7083	0.		.1042
152	.7083	0.		.1250
153	.6996	.1108	0.	
155	.6996	.1108		.1042
156	.6996	.1108		.1250
157	.7408	-.1173	0.	
159	.7408	-.1173		.1042
160	.7408	-.1173		.1250
161	.7469	-.0680	0.	
163	.7469	-.0680		.1042
164	.7469	-.0680		.1250
165	.7500	0.	0.	
167	.7500	0.		.1042
168	.7500	0.		.1250
169	.7408	.1173	0.	
171	.7408	.1173		.1042
172	.7408	.1173		.1250
173	.7819	-.1238	0.	
175	.7819	-.1238		.1042
176	.7819	-.1238		.1250
177	.7884	-.0718	0.	
179	.7884	-.0718		.1042
180	.7884	-.0718		.1250
181	.7917	0.	0.	
183	.7917	0.		.1042
184	.7917	0.		.1250
185	.7819	.1238	0.	
187	.7819	.1238		.1042
188	.7819	.1238		.1250
189	.8025	-.1271	0.	
191	.8025	-.1271		.1042
192	.8025	-.1271		.1250
193	.8092	-.0737	0.	
195	.8092	-.0737		.1042
196	.8092	-.0737		.1250
197	.8125	0.	0.	
199	.8125	0.		.1042
200	.8125	0.		.1250
201	.8025	.1271	0.	
203	.8025	.1271		.1042
204	.8025	.1271		.1250
205	.8231	-.1303	0.	
207	.8231	-.1303		.1042
208	.8231	-.1303		.1250
209	.8299	-.0756	0.	
211	.8299	-.0756		.1042
212	.8299	-.0756		.1250
213	.8333	0.	0.	
215	.8333	0.		.1042
216	.8333	0.		.1250
217	.8231	.1303	0.	
219	.8231	.1303		.1042
220	.8231	.1303		.1250

```
ELEMENTS,0,0,120
     1     1     5     9     9     2     6    10    10     1
     4     1     9    13    13     2    10    14    14     1
     7     5    17    21     9     6    18    22    10     1
    10     9    21    25    13    10    22    26    14     1
    13    17    29    33    33    18    30    34    34     1
    16    17    33    37    21    18    34    38    22     1
    19    21    37    41    25    22    38    42    26     1
    22    29    45    49    33    30    46    50    34     1
    25    33    49    53    37    34    50    54    38     1
    28    37    53    57    41    38    54    58    42     1
    31    45    61    65    49    46    62    66    50     1
    34    49    65    69    53    50    66    70    54     1
    37    53    69    73    57    54    70    74    58     1
    40    61    77    81    65    62    78    82    66     1
    43    65    81    85    69    66    82    86    70     1
    46    69    85    89    73    70    86    90    74     1
    49    77    93    97    81    78    94    98    82     1
    52    81    97   101    85    82    98   102    86     1
    55    85   101   105    89    86   102   106    90     1
    58    93   109   113    97    94   110   114    98     2
    61    97   113   117   101    98   114   118   102     1
    64   101   117   121   105   102   118   122   106     1
    67   109   125   129   113   110   126   130   114     2
    70   113   129   133   117   114   130   134   118     1
    73   117   133   137   121   118   134   138   122     1
    76   125   141   145   129   126   142   146   130     1
    78   127   143   147   131   128   144   148   132     2
    79   129   145   149   133   130   146   150   134     1
    81   131   147   151   135   132   148   152   136     2
    82   133   149   153   137   134   150   154   138     1
    84   135   151   155   139   136   152   156   140     2
    85   141   157   161   145   142   158   162   146     1
    88   145   161   165   149   146   162   166   150     1
    91   149   165   169   153   150   166   170   154     1
    94   157   173   177   161   158   174   178   162     1
    97   161   177   181   165   162   178   182   166     1
   100   165   181   185   169   166   182   186   170     1
   103   173   189   193   177   174   190   194   178     1
   106   177   193   197   181   178   194   198   182     1
   109   181   197   201   185   182   198   202   186     1
   112   189   205   209   193   190   206   210   194     1
   115   193   209   213   197   194   210   214   198     1
   118   197   213   217   201   198   214   218   202     1
   120   199   215   219   203   200   216   220   204     1
MATERIALS,2
     4     0     0
       0.0       0.90      390.0       0.90     1650.0     0.506     3000.0     0.506
     0.272
     150.0
     3     4     0
       0.0      30.00     1100.0      19.90     3000.0     19.90
       0.0      0.107      750.0      0.144     1100.0     0.172     3000.0     0.172
     480.0
FIRE,0,0,9,1
NONLINEAR
```

```
    1.7E-9      460.0
       .27       1.25        1.0        0.9        0.9        0.9
SURFACE,0,0,9
  205  209  210  206    1    1  206  210  211  207    1    1
  207  211  212  208    1    1  209  213  214  210    1    1
  210  214  215  211    1    1  211  215  216  212    1    1
  213  217  218  214    1    1  214  218  219  215    1    1
  215  219  220  216    1    1
EXOTHERMIC,0,0,0,0
CONVERGENCE
   30       .005       -.25
STEP     0        0.0       68.0
STEP     1       .025        347.600                                  3
STEP     2       .025        627.200                                  3
STEP     3       .025        906.800                                  3
STEP     4       .025       1060.000                                  3
STEP     5       .025       1150.000                                  3
```

```
*****************************************************************

FFFFF   I   RRRRR   EEEEE   SSSSS          TTTTT   33333
F       I   R   R   E       S                T       3
F       I   R   R   E       S                T      3
F       I   R   R   E       S                T     3
FFF     I   RRRRR   EFF     SSSSS  =====     T    3333
F       I   RR      E           S            T       3
F       I   R R     E           S            T       3
F       I   R  R    E           S            T       3
F       I   R   R   EEEEE   SSSSS            T    33333

   A THERMAL ANALYZER FOR THREE-DIMENSIONAL SYSTEMS,
   WITH TEMPERATURE-DEPENDENT THERMAL PROPERTIES,
   SUBJECTED TO A FIRE ENVIRONMENT

*****************************************************************

                - - - TITLE OF RUN - - -

** CIRCULAR COLUMN WITH 1/2 INCH SPIRAL - 3-D ANALYSIS **

*****************************************************************
```

TABLE B.4 OUTPUT FOR SAMPLE PROBLEM TWO

****

FIRES-T3 - FIRE RESPONSE OF STRUCTURES - THERMAL

** CIRCULAR COLUMN WITH 1/2 INCH SPIRAL - 3-D ANALYSIS **

GEOMETRIC DESCRIPTION OF SYSTEM TO BE ANALYZED

****

. . . . THERE ARE 220 NODAL POINTS . . . .

NODAL POINT	COORDINATES X	Y	Z	BOUNDARY CONDITION
1	0.	0.	0.	FLOW
2	0.	0.	.0521	FLOW
3	0.	0.	.1042	FLOW
4	0.	0.	.1250	FLOW
5	.1646	-.0261	0.	FLOW
6	.1646	-.0261	.0521	FLOW
7	.1646	-.0261	.1042	FLOW
8	.1646	-.0261	.1250	FLOW
9	.1667	0.	0.	FLOW
10	.1667	0.	.0521	FLOW
11	.1667	0.	.1042	FLOW
12	.1667	0.	.1250	FLOW
13	.1646	.0261	0.	FLOW
14	.1646	.0261	.0521	FLOW
15	.1646	.0261	.1042	FLOW
16	.1646	.0261	.1250	FLOW
17	.2469	-.0391	0.	FLOW
18	.2469	-.0391	.0521	FLOW
19	.2469	-.0391	.1042	FLOW
20	.2469	-.0391	.1250	FLOW
21	.2500	0.	0.	FLOW
22	.2500	0.	.0521	FLOW
23	.2500	0.	.1042	FLOW
24	.2500	0.	.1250	FLOW
25	.2469	.0391	0.	FLOW
26	.2469	.0391	.0521	FLOW
27	.2469	.0391	.1042	FLOW
28	.2469	.0391	.1250	FLOW
29	.3292	-.0522	0.	FLOW
30	.3292	-.0522	.0521	FLOW
31	.3292	-.0522	.1042	FLOW
32	.3292	-.0522	.1250	FLOW
33	.3320	-.0302	0.	FLOW
34	.3320	-.0302	.0521	FLOW
35	.3320	-.0302	.1042	FLOW
36	.3320	-.0302	.1250	FLOW
37	.3333	0.	0.	FLOW
38	.3333	0.	.0521	FLOW

39	.3333	0.	.1042	FLOW
40	.3333	0.	.1250	FLOW
41	.3292	.0522	0.	FLOW
42	.3292	.0522	.0521	FLOW
43	.3292	.0522	.1042	FLOW
44	.3292	.0522	.1250	FLOW
45	.4115	-.0652	0.	FLOW
46	.4115	-.0652	.0521	FLOW
47	.4115	-.0652	.1042	FLOW
48	.4115	-.0652	.1250	FLOW
49	.4149	-.0377	0.	FLOW
50	.4149	-.0377	.0521	FLOW
51	.4149	-.0377	.1042	FLOW
52	.4149	-.0377	.1250	FLOW
53	.4167	0.	0.	FLOW
54	.4167	0.	.0521	FLOW
55	.4167	0.	.1042	FLOW
56	.4167	0.	.1250	FLOW
57	.4115	.0652	0.	FLOW
58	.4115	.0652	.0521	FLOW
59	.4115	.0652	.1042	FLOW
60	.4115	.0652	.1250	FLOW
61	.4733	-.0749	0.	FLOW
62	.4733	-.0749	.0521	FLOW
63	.4733	-.0749	.1042	FLOW
64	.4733	-.0749	.1250	FLOW
65	.4772	-.0434	0.	FLOW
66	.4772	-.0434	.0521	FLOW
67	.4772	-.0434	.1042	FLOW
68	.4772	-.0434	.1250	FLOW
69	.4792	0.	0.	FLOW
70	.4792	0.	.0521	FLOW
71	.4792	0.	.1042	FLOW
72	.4792	0.	.1250	FLOW
73	.4733	.0749	0.	FLOW
74	.4733	.0749	.0521	FLOW
75	.4733	.0749	.1042	FLOW
76	.4733	.0749	.1250	FLOW
77	.5350	-.0848	0.	FLOW
78	.5350	-.0848	.0521	FLOW
79	.5350	-.0848	.1042	FLOW
80	.5350	-.0848	.1250	FLOW
81	.5394	-.0492	0.	FLOW
82	.5394	-.0492	.0521	FLOW
83	.5394	-.0492	.1042	FLOW
84	.5394	-.0492	.1250	FLOW
85	.5417	0.	0.	FLOW
86	.5417	0.	.0521	FLOW
87	.5417	0.	.1042	FLOW
88	.5417	0.	.1250	FLOW
89	.5350	.0848	0.	FLOW
90	.5350	.0848	.0521	FLOW
91	.5350	.0848	.1042	FLOW
92	.5350	.0848	.1250	FLOW
93	.5850	-.0927	0.	FLOW
94	.5850	-.0927	.0521	FLOW

95	.5850	-.0927	.1042	FLOW
96	.5850	-.0927	.1250	FLOW
97	.5899	-.0537	0.	FLOW
98	.5899	-.0537	.0521	FLOW
99	.5899	-.0537	.1042	FLOW
100	.5899	-.0537	.1250	FLOW
101	.5923	0.	0.	FLOW
102	.5923	0.	.0521	FLOW
103	.5923	0.	.1042	FLOW
104	.5923	0.	.1250	FLOW
105	.5850	.0927	0.	FLOW
106	.5850	.0927	.0521	FLOW
107	.5850	.0927	.1042	FLOW
108	.5850	.0927	.1250	FLOW
109	.6262	-.0992	0.	FLOW
110	.6262	-.0992	.0521	FLOW
111	.6262	-.0992	.1042	FLOW
112	.6262	-.0992	.1250	FLOW
113	.6314	-.0575	0.	FLOW
114	.6314	-.0575	.0521	FLOW
115	.6314	-.0575	.1042	FLOW
116	.6314	-.0575	.1250	FLOW
117	.6340	0.	0.	FLOW
118	.6340	0.	.0521	FLOW
119	.6340	0.	.1042	FLOW
120	.6340	0.	.1250	FLOW
121	.6262	.0992	0.	FLOW
122	.6262	.0992	.0521	FLOW
123	.6262	.0992	.1042	FLOW
124	.6262	.0992	.1250	FLOW
125	.6673	-.1057	0.	FLOW
126	.6673	-.1057	.0521	FLOW
127	.6673	-.1057	.1042	FLOW
128	.6673	-.1057	.1250	FLOW
129	.6729	-.0613	0.	FLOW
130	.6729	-.0613	.0521	FLOW
131	.6729	-.0613	.1042	FLOW
132	.6729	-.0613	.1250	FLOW
133	.6757	0.	0.	FLOW
134	.6757	0.	.0521	FLOW
135	.6757	0.	.1042	FLOW
136	.6757	0.	.1250	FLOW
137	.6673	.1057	0.	FLOW
138	.6673	.1057	.0521	FLOW
139	.6673	.1057	.1042	FLOW
140	.6673	.1057	.1250	FLOW
141	.6996	-.1108	0.	FLOW
142	.6996	-.1108	.0521	FLOW
143	.6996	-.1108	.1042	FLOW
144	.6996	-.1108	.1250	FLOW
145	.7054	-.0642	0.	FLOW
146	.7054	-.0642	.0521	FLOW
147	.7054	-.0642	.1042	FLOW
148	.7054	-.0642	.1250	FLOW
149	.7083	0.	0.	FLOW
150	.7083	0.	.0521	FLOW

151	.7083	0.	.1042	FLOW
152	.7083	0.	.1250	FLOW
153	.6996	.1108	0.	FLOW
154	.6996	.1108	.0521	FLOW
155	.6996	.1108	.1042	FLOW
156	.6996	.1108	.1250	FLOW
157	.7408	-.1173	0.	FLOW
158	.7408	-.1173	.0521	FLOW
159	.7408	-.1173	.1042	FLOW
160	.7408	-.1173	.1250	FLOW
161	.7469	-.0680	0.	FLOW
162	.7469	-.0680	.0521	FLOW
163	.7469	-.0680	.1042	FLOW
164	.7469	-.0680	.1250	FLOW
165	.7500	0.	0.	FLOW
166	.7500	0.	.0521	FLOW
167	.7500	0.	.1042	FLOW
168	.7500	0.	.1250	FLOW
169	.7408	.1173	0.	FLOW
170	.7408	.1173	.0521	FLOW
171	.7408	.1173	.1042	FLOW
172	.7408	.1173	.1250	FLOW
173	.7819	-.1238	0.	FLOW
174	.7819	-.1238	.0521	FLOW
175	.7819	-.1238	.1042	FLOW
176	.7819	-.1238	.1250	FLOW
177	.7884	-.0718	0.	FLOW
178	.7884	-.0718	.0521	FLOW
179	.7884	-.0718	.1042	FLOW
180	.7884	-.0718	.1250	FLOW
181	.7917	0.	0.	FLOW
182	.7917	0.	.0521	FLOW
183	.7917	0.	.1042	FLOW
184	.7917	0.	.1250	FLOW
185	.7819	.1238	0.	FLOW
186	.7819	.1238	.0521	FLOW
187	.7819	.1238	.1042	FLOW
188	.7819	.1238	.1250	FLOW
189	.8025	-.1271	0.	FLOW
190	.8025	-.1271	.0521	FLOW
191	.8025	-.1271	.1042	FLOW
192	.8025	-.1271	.1250	FLOW
193	.8092	-.0737	0.	FLOW
194	.8092	-.0737	.0521	FLOW
195	.8092	-.0737	.1042	FLOW
196	.8092	-.0737	.1250	FLOW
197	.8125	0.	0.	FLOW
198	.8125	0.	.0521	FLOW
199	.8125	0.	.1042	FLOW
200	.8125	0.	.1250	FLOW
201	.8025	.1271	0.	FLOW
202	.8025	.1271	.0521	FLOW
203	.8025	.1271	.1042	FLOW
204	.8025	.1271	.1250	FLOW
205	.8231	-.1303	0.	FLOW
206	.8231	-.1303	.0521	FLOW

207	.8231	-.1303	.1042	FLOW
208	.8231	-.1303	.1250	FLOW
209	.8299	-.0756	0.	FLOW
210	.8299	-.0756	.0521	FLOW
211	.8299	-.0756	.1042	FLOW
212	.8299	-.0756	.1250	FLOW
213	.8333	0.	0.	FLOW
214	.8333	0.	.0521	FLOW
215	.8333	0.	.1042	FLOW
216	.8333	0.	.1250	FLOW
217	.8231	.1303	0.	FLOW
218	.8231	.1303	.0521	FLOW
219	.8231	.1303	.1042	FLOW
220	.8231	.1303	.1250	FLOW

. . . . THERE ARE 120 3-D ELEMENTS . . . .

ELMT	I	J	K	L	M	N	O	P	MAT
1	1	5	9	9	2	6	10	10	1
2	2	6	10	10	3	7	11	11	1
3	3	7	11	11	4	8	12	12	1
4	1	9	13	13	2	10	14	14	1
5	2	10	14	14	3	11	15	15	1
6	3	11	15	15	4	12	16	16	1
7	5	17	21	9	6	18	22	10	1
8	6	18	22	10	7	19	23	11	1
9	7	19	23	11	8	20	24	12	1
10	9	21	25	13	10	22	26	14	1
11	10	22	26	14	11	23	27	15	1
12	11	23	27	15	12	24	28	16	1
13	17	29	33	33	18	30	34	34	1
14	18	30	34	34	19	31	35	35	1
15	19	31	35	35	20	32	36	36	1
16	17	33	37	21	18	34	38	22	1
17	18	34	38	22	19	35	39	23	1
18	19	35	39	23	20	36	40	24	1
19	21	37	41	25	22	38	42	26	1
20	22	38	42	26	23	39	43	27	1
21	23	39	43	27	24	40	44	28	1
22	29	45	49	33	30	46	50	34	1
23	30	46	50	34	31	47	51	35	1
24	31	47	51	35	32	48	52	36	1
25	33	49	53	37	34	50	54	38	1
26	34	50	54	38	35	51	55	39	1
27	35	51	55	39	36	52	56	40	1
28	37	53	57	41	38	54	58	42	1
29	38	54	58	42	39	55	59	43	1
30	39	55	59	43	40	56	60	44	1
31	45	61	65	49	46	62	66	50	1
32	46	62	66	50	47	63	67	51	1
33	47	63	67	51	48	64	68	52	1
34	49	65	69	53	50	66	70	54	1

35	50	66	70	54	51	67	71	55	1
36	51	67	71	55	52	68	72	56	1
37	53	69	73	57	54	70	74	58	1
38	54	70	74	58	55	71	75	59	1
39	55	71	75	59	56	72	76	60	1
40	61	77	81	65	62	78	82	66	1
41	62	78	82	66	63	79	83	67	1
42	63	79	83	67	64	80	84	68	1
43	65	81	85	69	66	82	86	70	1
44	66	82	86	70	67	83	87	71	1
45	67	83	87	71	68	84	88	72	1
46	69	85	89	73	70	86	90	74	1
47	70	86	90	74	71	87	91	75	1
48	71	87	91	75	72	88	92	76	1
49	77	93	97	81	78	94	98	82	1
50	78	94	98	82	79	95	99	83	1
51	79	95	99	83	80	96	100	84	1
52	81	97	101	85	82	98	102	86	1
53	82	98	102	86	83	99	103	87	1
54	83	99	103	87	84	100	104	88	1
55	85	101	105	89	86	102	106	90	1
56	86	102	106	90	87	103	107	91	1
57	87	103	107	91	88	104	108	92	1
58	93	109	113	97	94	110	114	98	2
59	94	110	114	98	95	111	115	99	2
60	95	111	115	99	96	112	116	100	2
61	97	113	117	101	98	114	118	102	1
62	98	114	118	102	99	115	119	103	1
63	99	115	119	103	100	116	120	104	1
64	101	117	121	105	102	118	122	106	1
65	102	118	122	106	103	119	123	107	1
66	103	119	123	107	104	120	124	108	1
67	109	125	129	113	110	126	130	114	2
68	110	126	130	114	111	127	131	115	2
69	111	127	131	115	112	128	132	116	2
70	113	129	133	117	114	130	134	118	1
71	114	130	134	118	115	131	135	119	1
72	115	131	135	119	116	132	136	120	1
73	117	133	137	121	118	134	138	122	1
74	118	134	138	122	119	135	139	123	1
75	119	135	139	123	120	136	140	124	1
76	125	141	145	129	126	142	146	130	1
77	126	142	146	130	127	143	147	131	1
78	127	143	147	131	128	144	148	132	2
79	129	145	149	133	130	146	150	134	1
80	130	146	150	134	131	147	151	135	1
81	131	147	151	135	132	148	152	136	2
82	133	149	153	137	134	150	154	138	1
83	134	150	154	138	135	151	155	139	1
84	135	151	155	139	136	152	156	140	2
85	141	157	161	145	142	158	162	146	1
86	142	158	162	146	143	159	163	147	1
87	143	159	163	147	144	160	164	148	1
88	145	161	165	149	146	162	166	150	1
89	146	162	166	150	147	163	167	151	1
90	147	163	167	151	148	164	168	152	1

91	149	165	169	153	150	166	170	154	1
92	150	166	170	154	151	167	171	155	1
93	151	167	171	155	152	168	172	156	1
94	157	173	177	161	158	174	178	162	1
95	158	174	178	162	159	175	179	163	1
96	159	175	179	163	160	176	180	164	1
97	161	177	181	165	162	178	182	166	1
98	162	178	182	166	163	179	183	167	1
99	163	179	183	167	164	180	184	168	1
100	165	181	185	169	166	182	186	170	1
101	166	182	186	170	167	183	187	171	1
102	167	183	187	171	168	184	188	172	1
103	173	189	193	177	174	190	194	178	1
104	174	190	194	178	175	191	195	179	1
105	175	191	195	179	176	192	196	180	1
106	177	193	197	181	178	194	198	182	1
107	178	194	198	182	179	195	199	183	1
108	179	195	199	183	180	196	200	184	1
109	181	197	201	185	182	198	202	186	1
110	182	198	202	186	183	199	203	187	1
111	183	199	203	187	184	200	204	188	1
112	189	205	209	193	190	206	210	194	1
113	190	206	210	194	191	207	211	195	1
114	191	207	211	195	192	208	212	196	1
115	193	209	213	197	194	210	214	198	1
116	194	210	214	198	195	211	215	199	1
117	195	211	215	199	196	212	216	200	1
118	197	213	217	201	198	214	218	202	1
119	198	214	218	202	199	215	219	203	1
120	199	215	219	203	200	216	220	204	1

. . . MAXIMUM BANDWIDTH IS 22 . . .

```
*****************************************************************
   FIRES-T3  -  FIRE RESPONSE OF STRUCTURES - THERMAL
** CIRCULAR COLUMN WITH 1/2 INCH SPIRAL - 3-D ANALYSIS **
   THERMAL PROPERTIES OF SYSTEM TO BE ANALYZED
   THERE ARE   2 DIFFERENT MATERIALS
*****************************************************************


. . . . MATERIAL NUMBER    1  . . . .

      . . . CONDUCTIVITY . . .
   NODE    TEMPERATURE       VALUE        SLOPE

      1          0.           .900
                                          0.
      2        390.0          .900
                                          -.313E-03
      3       1650.0          .506
                                          0.
      4       3000.0          .506

      . . . SPECIFIC HEAT . . .
MATERIAL PARAMETER OF CONSTANT VALUE     .272

      . . . DENSITY . . .
MATERIAL PARAMETER OF CONSTANT VALUE 150.000


. . . . MATERIAL NUMBER    2  . . . .

      . . . CONDUCTIVITY . . .
   NODE    TEMPERATURE       VALUE        SLOPE

      1          0.          30.000
                                          -.918E-02
      2       1100.0         19.900
                                          0.
      3       3000.0         19.900
```

. . . SPECIFIC HEAT . . .

NODE	TEMPERATURE	VALUE	SLOPE
1	0.	.107	
			.493E-04
2	750.0	.144	
			.800E-04
3	1100.0	.172	
			C.
4	3000.0	.172	

. . . DENSITY . . .

MATERIAL PARAMETER OF CONSTANT VALUE 480.000

```
*****************************************************************

    FIRES-T3  -  FIRE RESPONSE OF STRUCTURES - THERMAL

 ** CIRCULAR COLUMN WITH 1/2 INCH SPIRAL - 3-D ANALYSIS **

    NON-LINEAR FIRE BOUNDARY CONDITION

*****************************************************************

Q=A*(TF-TS)**N+SB*V*(AB*EF*(TF+TSHIFT)**4-ES*(TS+TSHIFT)**4)

WHERE
     TF - PSUEDO FIRE TEMPERATURE
     TS - SURFACE TEMPERATURE
     SB - STEFAN BOLZTMANN CONSTANT =     .1700E-08
     TSHIFT - SHIFT TO ABSOLUTE TEMPERATURE SCALE =     460.0
AND
```

MAT NUM	CONVECT FACTOR (A)	CONVECT POWER (N)	VIEW FACTOR (V)	ABSORBT (AB)	FIRE EMISSIV (EF)	SURFACE EMISSIV (ES)
1	.270	1.250	1.000	.900	.900	.900

. . . THERE ARE 9 3-D SURFACE ELEMENTS EXPOSED TO FIRE . .

DESCRIPTION OF SURFACE DIRECTLY EXPOSED TO FIRE

FIREBC SURFACE	NODE I	NODE J	NODE K	NODE L	MAT TYPE	FIRE TYPE	AREA
1	205	209	210	206	1	1	.003
2	206	210	211	207	1	1	.003
3	207	211	212	208	1	1	.001
4	209	213	214	210	1	1	.004
5	210	214	215	211	1	1	.004
6	211	215	216	212	1	1	.002
7	213	217	218	214	1	1	.007
8	214	218	219	215	1	1	.007
9	215	219	220	216	1	1	.003

```
*****************************************************************

   FIRES-T3  -  FIRE RESPONSE OF STRUCTURES - THERMAL

** CIRCULAR COLUMN WITH 1/2 INCH SPIRAL - 3-D ANALYSIS **

   INFORMATION RELEVANT TO THE ANALYSIS PROCEDURE

*****************************************************************


. . . . CONVERGENCE CRITERIA . . . .


CONVERGENCE CRITERIA FOR BOUNDARY CONDITIONS

   PERMISSIBLE ERROR =     .00500
   MAXIMUM NUMBER OF ITERATIONS =   30      BETA =     -.2500


. . . . STORAGE REQUIREMENT FOR BLANK COMMON . . . .

   SIZE BLANK COMMON =        8923 (DECIMAL)
                     =     0021333 (OCTAL)
```

```
*****************************************************************
    FIRES-T3  -  FIRE RESPONSE OF STRUCTURES - THERMAL
 ** CIRCULAR COLUMN WITH 1/2 INCH SPIRAL - 3-D ANALYSIS **
INITIAL SEQUENCE NUMBER IS     0 AND INITIAL TIME IS      0.
*****************************************************************
```

---------- NODAL POINT TEMPERATURES ----------

N	TEMP.	N	TEMP.	N	TEMP.	N	TEMP.
1	68.00	2	68.00	3	68.00	4	68.00
5	68.00	6	68.00	7	68.00	8	68.00
9	68.00	10	68.00	11	68.00	12	68.00
13	68.00	14	68.00	15	68.00	16	68.00
17	68.00	18	68.00	19	68.00	20	68.00
21	68.00	22	68.00	23	68.00	24	68.00
25	68.00	26	68.00	27	68.00	28	68.00
29	68.00	30	68.00	31	68.00	32	68.00
33	68.00	34	68.00	35	68.00	36	68.00
37	68.00	38	68.00	39	68.00	40	68.00
41	68.00	42	68.00	43	68.00	44	68.00
45	68.00	46	68.00	47	68.00	48	68.00
49	68.00	50	68.00	51	68.00	52	68.00
53	68.00	54	68.00	55	68.00	56	68.00
57	68.00	58	68.00	59	68.00	60	68.00
61	68.00	62	68.00	63	68.00	64	68.00
65	68.00	66	68.00	67	68.00	68	68.00
69	68.00	70	68.00	71	68.00	72	68.00
73	68.00	74	68.00	75	68.00	76	68.00
77	68.00	78	68.00	79	68.00	80	68.00
81	68.00	82	68.00	83	68.00	84	68.00
85	68.00	86	68.00	87	68.00	88	68.00
89	68.00	90	68.00	91	68.00	92	68.00
93	68.00	94	68.00	95	68.00	96	68.00
97	68.00	98	68.00	99	68.00	100	68.00
101	68.00	102	68.00	103	68.00	104	68.00
105	68.00	106	68.00	107	68.00	108	68.00
109	68.00	110	68.00	111	68.00	112	68.00
113	68.00	114	68.00	115	68.00	116	68.00
117	68.00	118	68.00	119	68.00	120	68.00
121	68.00	122	68.00	123	68.00	124	68.00
125	68.00	126	68.00	127	68.00	128	68.00
129	68.00	130	68.00	131	68.00	132	68.00
133	68.00	134	68.00	135	68.00	136	68.00
137	68.00	138	68.00	139	68.00	140	68.00
141	68.00	142	68.00	143	68.00	144	68.00
145	68.00	146	68.00	147	68.00	148	68.00
149	68.00	150	68.00	151	68.00	152	68.00
153	68.00	154	68.00	155	68.00	156	68.00
157	68.00	158	68.00	159	68.00	160	68.00

161	68.00	162	68.00	163	68.00	164	68.00
165	68.00	166	68.00	167	68.00	168	68.00
169	68.00	170	68.00	171	68.00	172	68.00
173	68.00	174	68.00	175	68.00	176	68.00
177	68.00	178	68.00	179	68.00	180	68.00
181	68.00	182	68.00	183	68.00	184	68.00
185	68.00	186	68.00	187	68.00	188	68.00
189	68.00	190	68.00	191	68.00	192	68.00
193	68.00	194	68.00	195	68.00	196	68.00
197	68.00	198	68.00	199	68.00	200	68.00
201	68.00	202	68.00	203	68.00	204	68.00
205	68.00	206	68.00	207	68.00	208	68.00
209	68.00	210	68.00	211	68.00	212	68.00
213	68.00	214	68.00	215	68.00	216	68.00
217	68.00	218	68.00	219	68.00	220	68.00

```
*****************************************************************

    FIRES-T3  -  FIRE RESPONSE OF STRUCTURES - THERMAL

 ** CIRCULAR COLUMN WITH 1/2 INCH SPIRAL - 3-D ANALYSIS **

 TIME STEP NUMBER     1 - TIME     .025 - TIME STEP     .025

*****************************************************************

     NUMBER OF NON-ZERO FLOW OR TEMPERATURE CONDITIONS    -0

     FIRE BOUNDARY CONDITION
      FIRE(1) =     347.600
      FIRE(2) =      -0.
      FIRE(3) =      -0.
      FIRE(4) =      -0.

------------ NODAL POINT TEMPERATURES --------------
```

N	TEMP.	N	TEMP.	N	TEMP.	N	TEMP.
1	68.00	2	68.00	3	68.00	4	68.00
5	68.00	6	68.00	7	68.00	8	68.00
9	68.00	10	68.00	11	68.00	12	68.00
13	68.00	14	68.00	15	68.00	16	68.00
17	68.00	18	68.00	19	68.00	20	68.00
21	68.00	22	68.00	23	68.00	24	68.00
25	68.00	26	68.00	27	68.00	28	68.00
29	68.00	30	68.00	31	68.00	32	68.00
33	68.00	34	68.00	35	68.00	36	68.00
37	68.00	38	68.00	39	68.00	40	68.00
41	68.00	42	68.00	43	68.00	44	68.00
45	68.00	46	68.00	47	68.00	48	68.00
49	68.00	50	68.00	51	68.00	52	68.00
53	68.00	54	68.00	55	68.00	56	68.00
57	68.00	58	68.00	59	68.00	60	68.00
61	68.00	62	68.00	63	68.00	64	68.00
65	68.00	66	68.00	67	68.00	68	68.00
69	68.00	70	68.00	71	68.00	72	68.00
73	68.00	74	68.00	75	68.00	76	68.00
77	68.00	78	68.00	79	68.00	80	68.00
81	68.00	82	68.00	83	68.00	84	68.00
85	68.00	86	68.00	87	68.00	88	68.00
89	68.00	90	68.00	91	68.00	92	68.00
93	68.02	94	68.02	95	68.02	96	68.02
97	68.02	98	68.02	99	68.02	100	68.02
101	68.00	102	68.00	103	68.00	104	68.00
105	68.00	106	68.00	107	68.00	108	68.00
109	68.02	110	68.02	111	68.03	112	68.03
113	68.02	114	68.02	115	68.03	116	68.03
117	68.01	118	68.01	119	68.01	120	68.01
121	68.01	122	68.01	123	68.01	124	68.01
125	68.02	126	68.02	127	68.04	128	68.04

129	68.03	130	68.03	131	68.04	132	68.05
133	68.04	134	68.03	135	68.07	136	68.07
137	68.04	138	68.03	139	68.07	140	68.08
141	68.13	142	68.13	143	68.07	144	68.06
145	68.13	146	68.13	147	68.07	148	68.06
149	68.13	150	68.13	151	68.09	152	68.08
153	68.13	154	68.14	155	68.09	156	68.09
157	68.62	158	68.61	159	68.61	160	68.61
161	68.62	162	68.61	163	68.61	164	68.61
165	68.62	166	68.62	167	68.61	168	68.61
169	68.62	170	68.62	171	68.62	172	68.62
173	70.96	174	70.96	175	70.96	176	70.96
177	70.97	178	70.97	179	70.97	180	70.97
181	70.98	182	70.98	183	70.98	184	70.98
185	70.98	186	70.98	187	70.98	188	70.98
189	75.49	190	75.49	191	75.49	192	75.49
193	75.51	194	75.51	195	75.51	196	75.51
197	75.52	198	75.52	199	75.52	200	75.52
201	75.52	202	75.52	203	75.52	204	75.52
205	85.73	206	85.73	207	85.73	208	85.73
209	85.74	210	85.74	211	85.74	212	85.74
213	85.74	214	85.74	215	85.74	216	85.74
217	85.75	218	85.75	219	85.75	220	85.75

---------- TEMPERATURE OF 3-D ELEMENTS ----------

N	TEMP.	N	TEMP.	N	TEMP.	N	TEMP.
1	68.00	2	68.00	3	68.00	4	68.00
5	68.00	6	68.00	7	68.00	8	68.00
9	68.00	10	68.00	11	68.00	12	68.00
13	68.00	14	68.00	15	68.00	16	68.00
17	68.00	18	68.00	19	68.00	20	68.00
21	68.00	22	68.00	23	68.00	24	68.00
25	68.00	26	68.00	27	68.00	28	68.00
29	68.00	30	68.00	31	68.00	32	68.00
33	68.00	34	68.00	35	68.00	36	68.00
37	68.00	38	68.00	39	68.00	40	68.00
41	68.00	42	68.00	43	68.00	44	68.00
45	68.00	46	68.00	47	68.00	48	68.00
49	68.01	50	68.01	51	68.01	52	68.01
53	68.01	54	68.01	55	68.00	56	68.00
57	68.00	58	68.02	59	68.02	60	68.02
61	68.01	62	68.01	63	68.02	64	68.01
65	68.01	66	68.01	67	68.02	68	68.03
69	68.03	70	68.02	71	68.03	72	68.04
73	68.02	74	68.03	75	68.04	76	68.08
77	68.07	78	68.05	79	68.08	80	68.07
81	68.07	82	68.09	83	68.08	84	68.08
85	68.37	86	68.36	87	68.34	88	68.38
89	68.36	90	68.34	91	68.38	92	68.36
93	68.35	94	69.79	95	69.79	96	69.79
97	69.80	98	69.79	99	69.79	100	69.80
101	69.80	102	69.80	103	73.23	104	73.23
105	73.23	106	73.24	107	73.24	108	73.24

109	73.25	110	73.25	111	73.25	112	80.62
113	80.62	114	80.62	115	80.63	116	80.63
117	80.63	118	80.63	119	80.63	120	80.63

0 SYSTEM ITERATIONS WERE PERFORMED
3 B. C. ITERATIONS WERE PERFORMED

```
*************************************************************

    FIRES-T3  -  FIRE RESPONSE OF STRUCTURES - THERMAL

 ** CIRCULAR COLUMN WITH 1/2 INCH SPIRAL - 3-D ANALYSIS **

 TIME STEP NUMBER     2 - TIME     .050 - TIME STEP     .025

*************************************************************

     NUMBER OF NON-ZERO FLOW OR TEMPERATURE CONDITIONS    -0

     FIRE BOUNDARY CONDITION
      FIRE(1) =     627.200
      FIRE(2) =      -0.
      FIRE(3) =      -0.
      FIRE(4) =      -0.

------------ NODAL POINT TEMPERATURES ---------------
```

N	TEMP.	N	TEMP.	N	TEMP.	N	TEMP.
1	68.00	2	68.00	3	68.00	4	68.00
5	68.00	6	68.00	7	68.00	8	68.00
9	68.00	10	68.00	11	68.00	12	68.00
13	68.00	14	68.00	15	68.00	16	68.00
17	68.00	18	68.00	19	68.00	20	68.00
21	68.00	22	68.00	23	68.00	24	68.00
25	68.00	26	68.00	27	68.00	28	68.00
29	68.00	30	68.00	31	68.00	32	68.00
33	68.00	34	68.00	35	68.00	36	68.00
37	68.00	38	68.00	39	68.00	40	68.00
41	68.00	42	68.00	43	68.00	44	68.00
45	68.00	46	68.00	47	68.00	48	68.00
49	68.00	50	68.00	51	68.00	52	68.00
53	68.00	54	68.00	55	68.00	56	68.00
57	68.00	58	68.00	59	68.00	60	68.00
61	68.00	62	68.00	63	68.00	64	68.00
65	68.00	66	68.00	67	68.00	68	68.00
69	68.00	70	68.00	71	68.00	72	68.00
73	68.00	74	68.00	75	68.00	76	68.00
77	68.02	78	68.02	79	68.02	80	68.02
81	68.01	82	68.01	83	68.02	84	68.02
85	68.01	86	68.01	87	68.01	88	68.01
89	68.00	90	68.00	91	68.00	92	68.00
93	68.12	94	68.13	95	68.14	96	68.14
97	68.11	98	68.12	99	68.13	100	68.13
101	68.02	102	68.02	103	68.02	104	68.02
105	68.01	106	68.02	107	68.02	108	68.02
109	68.14	110	68.15	111	68.17	112	68.17
113	68.13	114	68.14	115	68.16	116	68.16
117	68.06	118	68.07	119	68.08	120	68.09
121	68.05	122	68.07	123	68.09	124	68.09
125	68.15	126	68.16	127	68.23	128	68.25

129	68.17	130	68.17	131	68.27	132	68.30
133	68.24	134	68.22	135	68.42	136	68.44
137	68.24	138	68.22	139	68.44	140	68.47
141	68.78	142	68.78	143	68.39	144	68.35
145	68.78	146	68.79	147	68.42	148	68.38
149	68.80	150	68.80	151	68.51	152	68.48
153	68.80	154	68.81	155	68.55	156	68.52
157	71.30	158	71.28	159	71.24	160	71.23
161	71.30	162	71.28	163	71.25	164	71.24
165	71.32	166	71.30	167	71.27	168	71.26
169	71.32	170	71.31	171	71.29	172	71.28
173	81.86	174	81.85	175	81.85	176	81.85
177	81.88	178	81.87	179	81.87	180	81.87
181	81.93	182	81.93	183	81.92	184	81.92
185	81.93	186	81.93	187	81.92	188	81.92
189	99.46	190	99.46	191	99.45	192	99.45
193	99.54	194	99.54	195	99.54	196	99.54
197	99.55	198	99.55	199	99.55	200	99.55
201	99.55	202	99.55	203	99.54	204	99.54
205	135.23	206	135.23	207	135.22	208	135.22
209	135.28	210	135.28	211	135.28	212	135.28
213	135.27	214	135.27	215	135.27	216	135.27
217	135.28	218	135.28	219	135.28	220	135.28

---------- TEMPERATURE OF 3-D ELEMENTS ----------

N	TEMP.	N	TEMP.	N	TEMP.	N	TEMP.
1	68.00	2	68.00	3	68.00	4	68.00
5	68.00	6	68.00	7	68.00	8	68.00
9	68.00	10	68.00	11	68.00	12	68.00
13	68.00	14	68.00	15	68.00	16	68.00
17	68.00	18	68.00	19	68.00	20	68.00
21	68.00	22	68.00	23	68.00	24	68.00
25	68.00	26	68.00	27	68.00	28	68.00
29	68.00	30	68.00	31	68.00	32	68.00
33	68.00	34	68.00	35	68.00	36	68.00
37	68.00	38	68.00	39	68.00	40	68.01
41	68.01	42	68.01	43	68.01	44	68.01
45	68.01	46	68.00	47	68.00	48	68.00
49	68.07	50	68.07	51	68.08	52	68.04
53	68.04	54	68.04	55	68.01	56	68.01
57	68.01	58	68.13	59	68.14	60	68.15
61	68.08	62	68.09	63	68.10	64	68.04
65	68.05	66	68.05	67	68.15	68	68.18
69	68.22	70	68.15	71	68.19	72	68.24
73	68.15	74	68.20	75	68.27	76	68.47
77	68.40	78	68.32	79	68.50	80	68.45
81	68.40	82	68.52	83	68.50	84	68.48
85	70.03	86	69.93	87	69.81	88	70.04
89	69.95	90	69.85	91	70.06	92	69.98
93	69.89	94	76.58	95	76.56	96	76.55
97	76.60	98	76.59	99	76.58	100	76.62
101	76.61	102	76.60	103	90.68	104	90.68
105	90.68	106	90.72	107	90.72	108	90.72

109	90.74	110	90.74	111	90.73	112	117.37
113	117.37	114	117.37	115	117.41	116	117.41
117	117.41	118	117.41	119	117.41	120	117.41

0 SYSTEM ITERATIONS WERE PERFORMED
3 B. C. ITERATIONS WERE PERFORMED

PROBLEM COMPLETED

APPENDIX C

LISTING OF COMPUTER PROGRAM FIRES-T3

The following listing is the operational version of FIRES-T3 as of September 1977. Although the program has been tested, no warranty is made regarding its accuracy or reliability, and no responsibility is assumed in this respect.

```
      PROGRAM FIRES13(INPUT,OUTPUT,PUNCH,TAPE1=INPUT,TAPE2=OUTPUT,TAPE3=
     1PUNCH,TAPE6)
C
C
C     ****************************************************************
C                                                                     *
C      *FIRES-T3* IS A PROGRAM FOR TRANSIENT, NONLINEAR, ONE-, TWO-,  *
C      AND 3-DIMENSIONAL HEAT FLOW PROBLEMS IN WHICH THERMAL PROPER-  *
C      TIES OF THE MATERIAL CAN BE FUNCTIONS OF TEMPERATURE.  A FIRE  *
C      ENVIRONMENT CAN BE SIMULATED WITH OPTIONAL LINEAR AND NONLINEAR *
C      BOUNDARY CONDITIONS.  THE ANALYTICAL APPROACH USED IS THAT OF A *
C      FINITE ELEMENT TECHNIQUE COUPLED WITH A TIME STEP INTEGRATION.  *
C      THE PROGRAM IS DYNAMICALLY DIMENSIONED TO ALLOW FOR MINIMUM    *
C      CENTRAL MEMORY STORAGE.                                        *
C                                                                     *
C           ORIGINAL VERSION          AUGUST 1977                     *
C                                                                     *
C           PROGRAMMED BY R. IDING AND B. BRESLER                     *
C                                                                     *
C           UNIVERSITY OF CALIFORNIA     BERKELEY                     *
C                                                                     *
C     ****************************************************************
C
C
      COMMON /CONTROL/ ITITLE(6),IREAD(80),NIN,NOUT,NPUNCH,NUMNP,NEL1D,N
     1EL2D,NEL3D,NUMEL,MBAND,NMAT,NFBC1D,NFBC2D,NFBC3D,NBCMAT,NBCTYP
      COMMON /EXOTH/ NINT1D,NINT2D,NINT3D,NINT,NCINT
      COMMON C(10000)
C
C
      NIN=1
      NOUT=2
      NPUNCH=3
      NALLOW=10000
C
C     INPUT TITLE
C
   10 READ (NIN,100) ITITLE
C
C     INPUT OF PROBLEM DESCRIPTION DONE ON BASIS OF ALPHA-NUMERIC
C     CONTROL CARDS IN WHICH THE FIRST LETTER OF THE CONTROL
C     WORD IS CHECKED FOR PROPER INPUT SEQUENCE
C
C     INPUT CONTROL CARD * NODES *
C
      READ (NIN,160) IREAD
      IF (IREAD(1).EQ.55B) STOP
      IF (IREAD(1).NE.16B) GO TO 90
      N=1
C
C     OUTPUT TITLE PAGE
C
      WRITE (NOUT,110)
      WRITE (NOUT,120)
      WRITE (NOUT,130)
      WRITE (NOUT,140)
      WRITE (NOUT,120)
      WRITE (NOUT,150) ITITLE
      WRITE (NOUT,120)
C
C     INPUT OF NODAL DATA
C
```

```
FIRES-T3   63          C        NUMNP - NUMBER OF NODAL POINTS
FIRES-T3   64          C        NTBC - NUMBER OF KNOWN TEMPERATURE BOUNDARY CONDITIONS
FIRES-T3   65          C        X(I)=C(N1) - X COORDINATE OF NODAL POINT
FIRES-T3   66          C        Y(I)=C(N2) - Y COORDINATE OF NODAL POINT
FIRES-T3   67          C        Z(I)=C(N3) - Z COORDINATE OF NODAL POINT
FIRES-T3   68          C        KODE(I)=C(ND0) - INDICATES TYPE OF BOUNDARY CONDITION
FIRES-T3   69          C                         FLOW - HEAT FLOW IS KNOWN
FIRES-T3   70          C                         TEMP - TEMPERATURE IS KNOWN
FIRES-T3   71          C        DUMI(I)=C(NDI) - DUMMY VARIABLES REQUIRED IN CALCULATION
FIRES-T3   72          C                         I VARIES FROM 1 TO 5
FIRES-T3   73          C
FIRES-T3   74                 NUMNP=NUMBER(N)
FIRES-T3   75                 IF (NUMNP.LE.0) GO TO 90
FIRES-T3   76                 NTBC=NUMBER(N)
FIRES-T3   77                 IF (NTBC.GT.NUMNP) GO TO 90
FIRES-T3   78                 N1=1
FIRES-T3   79                 N2=N1+NUMNP
FIRES-T3   80                 N3=N2+NUMNP
FIRES-T3   81                 ND0=N3+NUMNP
FIRES-T3   82                 ND1=ND0+NUMNP
FIRES-T3   83                 ND2=ND1+NUMNP
FIRES-T3   84                 ND3=ND2+NUMNP
FIRES-T3   85                 ND4=ND3+NUMNP
FIRES-T3   86                 ND5=ND4+NUMNP
FIRES-T3   87                 N4=ND5+NUMNP
FIRES-T3   88          C
FIRES-T3   89                 CALL NODE (C(N1),C(N2),C(N3),C(ND0),C(ND1),NTBC)
FIRES-T3   90          C
FIRES-T3   91          C      INPUT CONROL CARD * ELEMENTS *
FIRES-T3   92          C
FIRES-T3   93                 READ (NIN,160) IREAD
FIRES-T3   94                 IF (IREAD(1).NE.5R) GO TO 90
FIRES-T3   95                 N=1
FIRES-T3   96          C
FIRES-T3   97          C      INPUT OF ELEMENT DATA
FIRES-T3   98          C
FIRES-T3   99          C        NEL1D - NUMBER OF 1-D ELEMENTS
FIRES-T3  100          C        NEL2D - NUMBER OF 2-D ELEMENTS
FIRES-T3  101          C        NEL3D - NUMBER OF 3-D ELEMENTS
FIRES-T3  102          C        NUMEL - TOTAL NUMBER OF ELEMENTS
FIRES-T3  103          C        MBAND - MAXIMUM BANDWIDTH OF CONDUCTIVITY MATRIX
FIRES-T3  104          C        LM(I)=C(N4) - ELEMENT NODAL POINT CONFIGURATION ARRAY
FIRES-T3  105          C        MMTYPE(I)=C(N5) - MATERIAL TYPE
FIRES-T3  106          C        BAREA(I)=C(N6) - BAR AREA ( FOR 1-D ELEMENTS )
FIRES-T3  107          C        THICK(I)=C(N7) - ELEMENT THICKNESS ( FOR 2-D ELEMENTS )
FIRES-T3  108          C        VOLUME(I)=C(NV) - ELEMENT VOLUME ( FOR 3-D ELEMENTS )
FIRES-T3  109          C
FIRES-T3  110                 NEL1D=NUMBER(N)
FIRES-T3  111                 NEL2D=NUMBER(N)
FIRES-T3  112                 NEL3D=NUMBER(N)
FIRES-T3  113                 NUMEL=NEL1D+NEL2D+NEL3D
FIRES-T3  114                 IF (NUMEL.LE.0) GO TO 90
FIRES-T3  115                 N5=N4+2*NEL1D+4*NEL2D+8*NEL3D
FIRES-T3  116                 N6=N5+NUMEL
FIRES-T3  117                 N7=N6+NEL1D
FIRES-T3  118                 NV=N7+NEL2D
FIRES-T3  119                 N0=NV+NEL3D
FIRES-T3  120          C
FIRES-T3  121                 CALL ELEMENT (C(N1),C(N2),C(N3),C(N4),C(N5),C(N6),C(N7),C(NV))
FIRES-T3  122          C
FIRES-T3  123          C      INPUT CONTROL CARD * MATERIALS *
FIRES-T3  124          C
```

```
FIRES-T3  125          READ (NIN,160) IREAD
FIRES-T3  126          IF (IREAD(1).NE.158) GO TO 90
FIRES-T3  127          N=1
FIRES-T3  128    C
FIRES-T3  129    C     INPUT OF THERMAL PROPERTIES FOR DIFFERENT MATERIALS
FIRES-T3  130    C
FIRES-T3  131    C        NMAT - NUMBER OF DIFFERENT MATERIALS
FIRES-T3  132    C        MATL(1)=C(N8) - CONTROL DATA REQUIRED FOR CALCULATION OF
FIRES-T3  133    C                        THERMAL PROPERTIES
FIRES-T3  134    C        XYS(1)=C(N9) - FUNCTION VALUES FOR THERMAL PROPERTIES
FIRES-T3  135    C                       CONTAINS  X COORDINATE - TEMPERATURE
FIRES-T3  136    C                                 Y COORDINATE - FUNCTION VALUE
FIRES-T3  137    C                                 S - SLOPE OF LINES CONNECTING X,Y PAIR
FIRES-T3  138    C
FIRES-T3  139          NMAT=NUMBER(N)
FIRES-T3  140          IF (NMAT.EQ.0) GO TO 90
FIRES-T3  141          N9=N8+6*NMAT
FIRES-T3  142    C
FIRES-T3  143          CALL MATRIAL (C(N8),C(N9),N)
FIRES-T3  144          N10=N9+N
FIRES-T3  145    C
FIRES-T3  146    C     INPUT CONTROL CARD * FIRE *
FIRES-T3  147    C
FIRES-T3  148          READ (NIN,160) IREAD
FIRES-T3  149          N=1
FIRES-T3  150          IF (IREAD(1).NE.68) GO TO 90
FIRES-T3  151    C
FIRES-T3  152    C     INPUT OF FIRE BOUNDARY CONDITION DATA
FIRES-T3  153    C
FIRES-T3  154    C        NFBC1D - NUMBER OF FIRE B.C. SURFACE NODES (FOR 1-D ELEMENTS)
FIRES-T3  155    C        NFBC2D - NUMBER OF FIRE B.C. SURFACE ELMTS (FOR 2-D ELEMENTS)
FIRES-T3  156    C        NFBC3D - NUMBER OF FIRE B.C. SURFACE ELMTS (FOR 3-D ELEMENTS)
FIRES-T3  157    C          ( THESE ARE MAXIMUMS IN ORDER TO ALLOT STORAGE )
FIRES-T3  158    C        NBCMAT - NUMBER OF DIFFERENT MATERIALS FOR FIRE B.C.
FIRES-T3  159    C        NBCTYP - TYPE OF FIRE B.C.
FIRES-T3  160    C        MAT(1)=C(N10)  - CONTROL DATA REQUIRED FOR CALCULATION OF FIRE
FIRES-T3  161    C                         BOUNDARY CONDITION PROPERTIES
FIRES-T3  162    C        FXYS(1)=C(N11) - CONTAINS FUNCTIONS OF FIRE B.C. PROPERTIES
FIRES-T3  163    C                         STRUCTURED SAME AS XYS
FIRES-T3  164    C
FIRES-T3  165          NFBC1D=NUMBER(N)
FIRES-T3  166          NFBC2D=NUMBER(N)
FIRES-T3  167          NFBC3D=NUMBER(N)
FIRES-T3  168          NUMFBC=NFBC1D+NFBC2D+NFBC3D
FIRES-T3  169          IF (NUMFBC.EQ.0) GO TO 40
FIRES-T3  170          NBCMAT=NUMBER(N)
FIRES-T3  171          READ (NIN,160) IREAD
FIRES-T3  172          IF (IREAD(1).NE.148) GO TO 20
FIRES-T3  173    C
FIRES-T3  174    C     LINEAR FIRE BOUNDARY CONDITION
FIRES-T3  175    C
FIRES-T3  176    C        Q = H(T)*(TF-TS)   WHERE
FIRES-T3  177    C                           H(T) - SURFACE HEAT TRANSFER COEFFICENT
FIRES-T3  178    C                           TF - PSUEDO-FIRE TEMPERATURE (INPUT DATA)
FIRES-T3  179    C                           TS - SURFACE TEMPERATURE OF SYSTEM
FIRES-T3  180    C                           T=(TF+TS)/2
FIRES-T3  181    C
FIRES-T3  182          NBCTYP=1010 LINEAR BC
FIRES-T3  183          N11=N10+2*NBCMAT
FIRES-T3  184          GO TO 30
FIRES-T3  185    C
FIRES-T3  186       20 IF (IREAD(1).NE.170) GO TO 90
```

```
FIRES-T3  187          C
FIRES-T3  188          C     NON-LINEAR FIRE BOUNDARY CONDITION
FIRES-T3  189          C
FIRES-T3  190          C        Q = A*(TF-TS)**N + V*SB*(AB*EF*ATF**4-ES*ATS**4)
FIRES-T3  191          C
FIRES-T3  192          C        WHERE  A - CONVECTION FACTOR
FIRES-T3  193          C               N - POWER OF CONVECTION TERM
FIRES-T3  194          C               V - VIEW FACTOR FOR RADIATION TERM
FIRES-T3  195          C               SB - STEFANN BOLTZMANN CONSTANT
FIRES-T3  196          C               AB - ABSORBTION FACTOR OF FIRE
FIRES-T3  197          C               EF - EMISSIVITY OF FIRE
FIRES-T3  198          C               ES - EMISSIVITY OF SURFACE
FIRES-T3  199          C               ATF - ABSOLUTE TEMPERATURE OF PSUEDO FIRE
FIRES-T3  200          C               ATS - ABSOLUTE TEMPERATURE OF  SURFACE OF SYSTEM
FIRES-T3  201          C
FIRES-T3  202                 NBCTYP=10HNON-LIN BC
FIRES-T3  203                 N11=N10+NBCMAT
FIRES-T3  204          C
FIRES-T3  205             30 CONTINUE
FIRES-T3  206          C
FIRES-T3  207                 CALL FIREMAT (C(N10),C(N11),N)
FIRES-T3  208                 N12=N11+N
FIRES-T3  209          C
FIRES-T3  210          C     INPUT OF GEOMETRIC DESCRIPTION OF FIRE BOUNDARY
FIRES-T3  211          C
FIRES-T3  212          C         LI(I)=C(N12) - FIRST  NODE THAT BOUNDS FIRE  SURFACE ELEM
FIRES-T3  213          C                        ( 1-D, 2-D, AND 3-D ELEMENTS )
FIRES-T3  214          C         LJ(I)=C(N13) - SECOND NODE THAT BOUNDS FIRE SURFACE ELEM
FIRES-T3  215          C                        ( 2-D AND 3-D ELEMENTS ONLY )
FIRES-T3  216          C         LK(I)=C(N14) - THIRD  NODE THAT BOUNDS FIRE SURFACE ELEM
FIRES-T3  217          C                        ( 3-D ELEMENTS ONLY )
FIRES-T3  218          C         LL(I)=C(N15) - FOURTH NODE THAT BOUNDS FIRE SURFACE ELEM
FIRES-T3  219          C                        ( 3-D ELEMENTS ONLY )
FIRES-T3  220          C        LMAT(I)=C(N16) - FIRE BOUNDARY CONDITION TYPE (MATERIAL)
FIRES-T3  221          C        LFIRE(I)=C(N17) - NUMBER OF FIRE ACTIVE ON SURFACE I, I-J,
FIRES-T3  222          C                          OR I-J-K-L
FIRES-T3  223          C        AIJKL(I)=C(N18) - AREA OF SURFACE I, I-J, OR I-J-K-L
FIRES-T3  224          C        LELEM(I)=C(N19) - NUMBER OF FINITE ELEMENT ADJACENT TO THE
FIRES-T3  225          C                          FIRE SURFACE ( 1-D AND 2-D ONLY )
FIRES-T3  226          C
FIRES-T3  227                 N13=N12+NUMFBC
FIRES-T3  228                 N14=N13+NFBC2D+NFBC3D
FIRES-T3  229                 N15=N14+NFBC3D
FIRES-T3  230                 N16=N15+NFBC3D
FIRES-T3  231                 N17=N16+NUMFBC
FIRES-T3  232                 N18=N17+NUMFBC
FIRES-T3  233                 N19=N18+NUMFBC
FIRES-T3  234                 N20=N19+NFBC1D+NFBC2D
FIRES-T3  235          C
FIRES-T3  236                 CALL FIREBC (C(N1),C(N2),C(N3),C(ND0),C(N6),C(N7),C(N12),C(N13),C(
FIRES-T3  237                1N14),C(N15),C(N16),C(N17),C(N18),C(N19))
FIRES-T3  238                 GO TO 50
FIRES-T3  239          C
FIRES-T3  240             40 CONTINUE
FIRES-T3  241          C
FIRES-T3  242          C     WHEN NO FIRE B.C. IS SPECIFIED, INITIALIZE N11 - N20
FIRES-T3  243          C
FIRES-T3  244                 N11=N10
FIRES-T3  245                 N12=N10
FIRES-T3  246                 N13=N10
FIRES-T3  247                 N14=N10
FIRES-T3  248                 N15=N10
```

```
FIRES-T3  249          N16=N10
FIRES-T3  250          N17=N10
FIRES-T3  251          N18=N10
FIRES-T3  252          N19=N10
FIRES-T3  253          N20=N10
FIRES-T3  254    C
FIRES-T3  255    C     INPUT CONTROL CARD * EXOTHERMIC *
FIRES-T3  256    C
FIRES-T3  257       50 READ (NIN,160) IREAD
FIRES-T3  258          IF (IREAD(1).NE.5H) GO TO 90
FIRES-T3  259          N=1
FIRES-T3  260    C
FIRES-T3  261    C     INPUT OF DATA DESCRIBING INTERNAL EXOTHERMIC HEAT GENERATION
FIRES-T3  262    C
FIRES-T3  263    C        NINT1D - NUMBER OF 1-D ELEMENTS WITH INTERNAL HEAT GENERATION
FIRES-T3  264    C        NINT2D - NUMBER OF 2-D ELEMENTS WITH INTERNAL HEAT GENERATION
FIRES-T3  265    C        NINT3D - NUMBER OF 3-D ELEMENTS WITH INTERNAL HEAT GENERATION
FIRES-T3  266    C        NINT - TOTAL NUMBER OF ELEMENTS WITH HEAT GENERATION
FIRES-T3  267    C        NQINT - NUMBER OF DIFFERENT HEATING CURVES
FIRES-T3  268    C        IEXC(1)=C(N20) - CONTROL DATA FOR HEATING CURVES
FIRES-T3  269    C        EXYS(1)=C(N21) - CONTAINS FUNCTION VALUES FOR HEATING CURVE
FIRES-T3  270    C                         X-COORDINATE - TIME
FIRES-T3  271    C                         Y-COORDINATE - HEAT RATE
FIRES-T3  272    C                         S - SLOPE OF LINES CONNECTING X,Y PAIRS
FIRES-T3  273    C        IEL(1)=C(N22) - ELEMENT NUMBER OF EACH ELEMENT UNDERGOING
FIRES-T3  274    C                        EXOTHERMIC HEATING
FIRES-T3  275    C        IMAT(1)=C(N23) - HEATING CURVE OF EACH ELEMENT UNDERGOING
FIRES-T3  276    C                         EXOTHERMIC HEATING
FIRES-T3  277    C        VEL(1)=C(N24) - VOLUME OF EACH ELEMENT
FIRES-T3  278    C
FIRES-T3  279          NINT1D=NUMBER(N)
FIRES-T3  280          NINT2D=NUMBER(N)
FIRES-T3  281          NINT3D=NUMBER(N)
FIRES-T3  282          NINT=NINT1D+NINT2D+NINT3D
FIRES-T3  283          IF (NINT.NE.0) GO TO 60
FIRES-T3  284          N21=N20
FIRES-T3  285          N22=N20
FIRES-T3  286          N23=N20
FIRES-T3  287          N24=N20
FIRES-T3  288          N25=N20
FIRES-T3  289          GO TO 70
FIRES-T3  290       60 NQINT=NUMBER(N)
FIRES-T3  291          N21=N20+NQINT*3
FIRES-T3  292          CALL EXOFUN (C(N20),C(N21),N)
FIRES-T3  293          N22=N21+N
FIRES-T3  294          N23=N22+NINT
FIRES-T3  295          N24=N23+NINT
FIRES-T3  296          N25=N24+NINT
FIRES-T3  297          CALL EXOELS (C(N1),C(N2),C(N3),C(N4),C(N5),C(N7),C(N9),C(N22),C(N2
FIRES-T3  298         13),C(N24))
FIRES-T3  299    C
FIRES-T3  300    C     ESTABLISH ADDITIONAL DYNAMICALLY DIMENSIONED VARIABLES REQUIRED
FIRES-T3  301    C     IN THE HEAT FLOW ANALYSIS
FIRES-T3  302    C
FIRES-T3  303    C        Q(1)=C(N25) - FLOW VECTOR
FIRES-T3  304    C        T(1)=C(N26) - TEMPERATURE VECTOR
FIRES-T3  305    C        B(1)=C(N27) - HEAT LOAD (FLOW) VECTOR USED IN ANALYSIS
FIRES-T3  306    C        AT(1)=C(N29) - ELEMENT TEMPERATURES
FIRES-T3  307    C        A(1,1)=C(N29) - MODIFIED CONDUCTIVITY MATRIX
FIRES-T3  308    C        NTOTAL - TOTAL AMOUNT OF STORAGE REQUIRED FOR BLANK COMMON
FIRES-T3  309    C
FIRES-T3  310       70 N25=N25+NUMNP
```

```
FIRES-T3  311              N27=N26+NUMNP
FIRES-T3  312              N28=N27+NUMNP
FIRES-T3  313              N29=N28+NUMEL
FIRES-T3  314              NTOTAL=N29+NUMNF*MBAND
FIRES-T3  315              IF (NTOTAL.LE.NALLOW) GO TO 80
FIRES-T3  316              WRITE (NOUT,180) NTOTAL
FIRES-T3  317              STOP
FIRES-T3  318        C
FIRES-T3  319        C     INPUT CONTROL CARD * CONVERGENCE *
FIRES-T3  320        C
FIRES-T3  321           80 READ (NIN,160) IREAD
FIRES-T3  322              IF (IREAD(1).NE.3B) GO TO 90
FIRES-T3  323        C
FIRES-T3  324        C     INPUT CONVERGENCE CONTROL DATA FOR ITERATIVE PROCESS
FIRES-T3  325        C
FIRES-T3  326              CALL CONVERG (NTOTAL)
FIRES-T3  327        C
FIRES-T3  328        C     TRANSFER CONTROL OF PROGRAM TO HEAT FLOW ANALYSIS ROUTINE
FIRES-T3  329        C     IN ORDER TO CARRY OUT STEP-BY-STEP TIME INTEGRATION
FIRES-T3  330        C
FIRES-T3  331              CALL HEATFLO (C(N1),C(N2),C(N3),C(ND0),C(ND1),C(ND2),C(ND3),C(ND4)
FIRES-T3  332             1,C(ND5),C(N4),C(N5),C(N6),C(N7),C(N8),C(N9),C(N10),C(N11),C(N12),C
FIRES-T3  333             2(N13),C(N14),C(N15),C(N16),C(N17),C(N18),C(N19),C(N20),C(N21),C(N2
FIRES-T3  334             32),C(N23),C(N24),C(N25),C(N26),C(N27),C(N28),C(N29),C(NV),NUMNP,NU
FIRES-T3  335             4MFBC)
FIRES-T3  336              GO TO 10
FIRES-T3  337        C
FIRES-T3  338           90 CONTINUE
FIRES-T3  339        C
FIRES-T3  340        C     ERROR WAS DETECTED IN CONTROL WORD OR CONTROL VARIABLE
FIRES-T3  341        C     HAS IMPROPER VALUE AND PROGRAM IS TERMINATED
FIRES-T3  342        C
FIRES-T3  343              WRITE (NOUT,170) IREAD
FIRES-T3  344              STOP
FIRES-T3  345        C
FIRES-T3  346        C
FIRES-T3  347        C
FIRES-T3  348          100 FORMAT (6A10)
FIRES-T3  349          110 FORMAT (1H6,13(/))
FIRES-T3  350          120 FORMAT (61H ***********************************************
FIRES-T3  351             1******)
FIRES-T3  352          130 FORMAT (///,5X,50HFFFFF  I  RRRRR  EEEEE  SSSSS          TTTTT  333
FIRES-T3  353             133/5X,50HF       I  R   R  E       S                T       3 /5X,50H
FIRES-T3  354             2F       I  R   R  E       S                T       3  /5X,50HF       I
FIRES-T3  355             3 R   R  E       S                T     3   /5X,50HFFF     I  RRRRR  E
FIRES-T3  356             4FE    SSSSS  =====     T     3333 /5X,50HF       I  RR     E
FIRES-T3  357             5 S            T        3/5X,50HF       I  R R    E           S
FIRES-T3  358             6    T         3/5X,50HF       I  R  R   E           S           T
FIRES-T3  359             7    3/5X,50HF       I  R   R  EEEEE  SSSSS           T     33333///)
FIRES-T3  360          140 FORMAT (7X49HA THERMAL ANALYZER FOR THREE-DIMENSIONAL SYSTEMS,/7X,
FIRES-T3  361             1,46HWITH TEMPERATURE-DEPENDENT THERMAL PROPERTIES,,/7X,31HSUBJECTE
FIRES-T3  362             2D TO A FIRE ENVIRONMENT,///)
FIRES-T3  363          150 FORMAT (///18X,24H- - - TITLE OF RUN - - -,//1X,6A10///)
FIRES-T3  364          160 FORMAT (80R1)
FIRES-T3  365          170 FORMAT (6(/),45H - - - PROGRAM TERMINATED - INPUT ERROR - - -,//1X
FIRES-T3  366             1,80R1)
FIRES-T3  367          180 FORMAT (////37H STOP - INCREASE BLANK COMMON SIZE TO,I10)
FIRES-T3  368              END
```

```
FIRES-T3  369              FUNCTION NUMBER (I)
FIRES-T3  370        C
FIRES-T3  371        C
FIRES-T3  372        C     FUNCTION *NUMBER* OBTAINS AN INTEGER CONSTANT CONTAINED
FIRES-T3  373        C     ON AN ALPHA-NUMERIC CONTROL CARD.  THE INTEGER CONSTANT MUST
FIRES-T3  374        C     BE CONTAINED BETWEEN COMMAS OR BETWEEN A COMMA AND A BLANK.
FIRES-T3  375        C
FIRES-T3  376        C
FIRES-T3  377              COMMON /CONTROL/ ITITLE(6),IREAD(80),NIN,NOUT,NPUNCH,NUMNP,NELID,N
FIRES-T3  378             1EL2D,NEL3D,NUMEL,MBAND,NMAT,NFBC1D,NFBC2D,NFBC3D,NBCMAT,NBCTYP
FIRES-T3  379        C
FIRES-T3  380              K=0
FIRES-T3  381           10 J=IREAD(I)
FIRES-T3  382              IF (J.EQ.56B) GO TO 20
FIRES-T3  383              IF (J.GT.32B) GO TO 40
FIRES-T3  384              I=I+1
FIRES-T3  385              IF (I.EQ.81) GO TO 30
FIRES-T3  386              GO TO 10
FIRES-T3  387           20 I=I+1
FIRES-T3  388              J=IREAD(I)
FIRES-T3  389              IF (J.EQ.55B.OR.J.EQ.56B) GO TO 30
FIRES-T3  390              IF (J.LT.33B.OR.J.GT.44B) GO TO 40
FIRES-T3  391              J=J-33B
FIRES-T3  392              K=K*10+J
FIRES-T3  393              GO TO 20
FIRES-T3  394           30 NUMBER=K
FIRES-T3  395              RETURN
FIRES-T3  396        C
FIRES-T3  397           40 CONTINUE
FIRES-T3  398              PRINT 50, (IREAD(J),J=1,80)
FIRES-T3  399              STOP
FIRES-T3  400        C
FIRES-T3  401        C
FIRES-T3  402        C
FIRES-T3  403           50 FORMAT (///,33H - - - PROGRAM TERMINATED - - - -,//,13H  INPUT ERR
FIRES-T3  404             1OR,/1X,80R1)
FIRES-T3  405              END
```

```
FIRES-T3  406              SUBROUTINE NODE (X,Y,Z,KODE,ID,NTBC)
FIRES-T3  407        C
FIRES-T3  408        C
FIRES-T3  409        C     SUBROUTINE *NODE* INPUTS NODAL COORDINATES AND SETS
FIRES-T3  410        C     THE FLOW AND TEMPERATURE BOUNDARY CONDITIONS
FIRES-T3  411        C
FIRES-T3  412        C
FIRES-T3  413              COMMON /CONTROL/ ITITLE(6),IREAD(80),NIN,NOUT,NPUNCH,NUMNP,NELID,N
FIRES-T3  414             1EL2D,NEL3D,NUMEL,MBAND,NMAT,NFBC1D,NFBC2D,NFBC3D,NBCMAT,NBCTYP
FIRES-T3  415              DIMENSION X(1), Y(1), Z(1), KODE(1), ID(1)
FIRES-T3  416        C
FIRES-T3  417        C     OUTPUT PAGE HEADING
FIRES-T3  418        C
FIRES-T3  419              WRITE (NOUT,100)
FIRES-T3  420              WRITE (NOUT,110)
FIRES-T3  421              WRITE (NOUT,120) ITITLE
FIRES-T3  422              WRITE (NOUT,130)
FIRES-T3  423              WRITE (NOUT,110)
FIRES-T3  424              WRITE (NOUT,140) NUMNP
FIRES-T3  425              WRITE (NOUT,150)
```

```
FIRES-T3  426          C
FIRES-T3  427          C     INITIALIZE BOUNDARY CONDITIONS TO FLOW
FIRES-T3  428          C
FIRES-T3  429                DO 10 I=1,NUMNP
FIRES-T3  430             10 KODE(I)=4HFLOW
FIRES-T3  431          C
FIRES-T3  432          C     INPUT NODAL COORDINATES
FIRES-T3  433          C
FIRES-T3  434                L=1
FIRES-T3  435             20 READ (NIN,160) N,X(N),Y(N),Z(N)
FIRES-T3  436                IF (N.GE.L) GO TO 40
FIRES-T3  437          C
FIRES-T3  438             30 WRITE (NOUT,170) N,X(N),Y(N),Z(N)
FIRES-T3  439                STOP
FIRES-T3  440          C
FIRES-T3  441             40 IF (N.EQ.L) GO TO 60
FIRES-T3  442                IF (L.EQ.1) GO TO 30
FIRES-T3  443          C
FIRES-T3  444          C     WHEN N .GE. L THE PROGRAM GENERATES INTERMEDIATE NODES
FIRES-T3  445          C     AT INTERVALS OF DX, DY, AND DZ
FIRES-T3  446          C
FIRES-T3  447                DIFF=N+1-L
FIRES-T3  448                DX=(X(N)-X(L-1))/DIFF
FIRES-T3  449                DY=(Y(N)-Y(L-1))/DIFF
FIRES-T3  450                DZ=(Z(N)-Z(L-1))/DIFF
FIRES-T3  451             50 X(L)=X(L-1)+DX
FIRES-T3  452                Y(L)=Y(L-1)+DY
FIRES-T3  453                Z(L)=Z(L-1)+DZ
FIRES-T3  454                L=L+1
FIRES-T3  455                IF (N.GT.L) GO TO 50
FIRES-T3  456             60 L=L+1
FIRES-T3  457                IF (N.LT.NUMNP) GO TO 20
FIRES-T3  458                IF (N.NE.NUMNP) GO TO 30
FIRES-T3  459                IF (NTBC.EQ.0) GO TO 80
FIRES-T3  460          C
FIRES-T3  461          C     INPUT KNOWN TEMPERATURE BOUNDARY CONDITIONS
FIRES-T3  462          C
FIRES-T3  463                READ (NIN,180) (ID(I),I=1,NTBC)
FIRES-T3  464                DO 70 I=1,NTBC
FIRES-T3  465                J=ID(I)
FIRES-T3  466                IF (J.LE.0.OR.J.GT.NUMNP) GO TO 90
FIRES-T3  467             70 KODE(J)=4HTEMP
FIRES-T3  468          C
FIRES-T3  469          C     OUTPUT NODAL COORDINATES AND BOUNDARY CONDITION CODE
FIRES-T3  470          C
FIRES-T3  471             80 WRITE (NOUT,190) (I,X(I),Y(I),Z(I),KODE(I),I=1,NUMNP)
FIRES-T3  472                RETURN
FIRES-T3  473          C
FIRES-T3  474             90 WRITE (NOUT,200)
FIRES-T3  475                STOP
FIRES-T3  476          C
FIRES-T3  477          C
FIRES-T3  478          C
FIRES-T3  479            100 FORMAT (1H6,5(/))
FIRES-T3  480            110 FORMAT (61H ***************************************************
FIRES-T3  481               1******)
FIRES-T3  482            120 FORMAT (/5X50HFIRES-T3  -  FIRE RESPONSE OF STRUCTURES - THERMAL,/
FIRES-T3  483               1/1X,CA10)
FIRES-T3  484            130 FORMAT (/7X,46HGEOMETRIC DESCRIPTION OF SYSTEM TO BE ANALYZED,/)
FIRES-T3  485            140 FORMAT (//,20H  . . . . THERE ARE ,I5,22H NODAL POINTS . . . . )
FIRES-T3  486            150 FORMAT (//,6H NODAL,24X,11HCOORDINATES,12X,8HBOUNDARY,/,6H POINT,9
FIRES-T3  487               1X,1HX,14X,1HY,14X,1HZ,6X,9HCONDITION,/)
```

```
FIRES-T3  488          160 FORMAT (I5,3E10.0)
FIRES-T3  489          170 FORMAT (5(/),51H  - - - PROGRAM TERMINATED - NODE INPUT ERROR - -
FIRES-T3  490             1-,//1X,I5,3F10.4)
FIRES-T3  491          180 FORMAT (16I5)
FIRES-T3  492          190 FORMAT (I5,3F15.4,7X,A4)
FIRES-T3  493          200 FORMAT (5(/),33H  - - - PROGRAM TERMINATED - - - ,/,47H  ERROR IN
FIRES-T3  494             1TEMPERATURE BOUNDARY CONDITION INPUT)
FIRES-T3  495              END
```

```
FIRES-T3  496              SUBROUTINE ELEMENT (X,Y,Z,LM,MMTYPE,BAREA,THICK,VOLUME)
FIRES-T3  497        C
FIRES-T3  498        C
FIRES-T3  499        C     SUBROUTINE *ELEMENT* INPUTS ELEMENT DATA
FIRES-T3  500        C
FIRES-T3  501        C
FIRES-T3  502              COMMON /CONTROL/ ITITLE(6),IREAD(80),NIN,NOUT,NPUNCH,NUMNP,NEL1D,N
FIRES-T3  503             1EL2D,NEL3D,NUMEL,MBAND,NMAT,NFBC1D,NFBC2D,NFBC3D,NBCMAT,NBCTYP
FIRES-T3  504              DIMENSION X(1), Y(1), Z(1), LM(1), KX(8), MMTYPE(1), BAREA(1), THI
FIRES-T3  505             1CK(1), VOLUME(1)
FIRES-T3  506              DIMENSION SI(8), TI(8), UI(8), XX(8), YY(8), ZZ(8), DI3,8), DSTU(8
FIRES-T3  507             1), DPSTU(3,8), CJAC(3,3), POS(2)
FIRES-T3  508              DATA POS/-0.57735027,+0.57735027/
FIRES-T3  509              DATA SI/-1.,1.,1.,-1.,-1.,1.,1.,-1./
FIRES-T3  510              DATA TI/-1.,-1.,1.,1.,-1.,-1.,1.,1./
FIRES-T3  511              DATA UI/-1.,-1.,-1.,-1.,1.,1.,1.,1./
FIRES-T3  512        C
FIRES-T3  513        C
FIRES-T3  514        C     O N E - D I M E N S I O N A L   E L E M E N T S
FIRES-T3  515        C
FIRES-T3  516        C
FIRES-T3  517              MBAND=0
FIRES-T3  518              IF (NEL1D.EQ.0) GO TO 80
FIRES-T3  519              NLM=0
FIRES-T3  520              NUM=0
FIRES-T3  521              WRITE (NOUT,360) NEL1D
FIRES-T3  522              WRITE (NOUT,370)
FIRES-T3  523              DO 70 N=1,NEL1D
FIRES-T3  524              NLM=NLM+2
FIRES-T3  525              IF (NUM-N) 10,20,20
FIRES-T3  526        C
FIRES-T3  527        C     READ ELEMENT CARD
FIRES-T3  528        C
FIRES-T3  529           10 READ (NIN,420) NUM,KX(1),KX(2),MTIPE,BA
FIRES-T3  530              IF (BA.EQ.0.0) BA=1.0
FIRES-T3  531              IF (NUM.GT.NEL1D) GO TO 40
FIRES-T3  532              IF (N.EQ.1) GO TO 30
FIRES-T3  533        C
FIRES-T3  534        C     GENERATE LM ARRAY
FIRES-T3  535        C
FIRES-T3  536           20 LM(NLM-1)=LM(NLM-3)+1
FIRES-T3  537              LM(NLM)=LM(NLM-2)+1
FIRES-T3  538              MMTYPE(N)=MMTYPE(N-1)
FIRES-T3  539              BAREA(N)=BAREA(N-1)
FIRES-T3  540           30 IF (NUM-N) 40,50,60
FIRES-T3  541        C
FIRES-T3  542        C     ERROR IN INPUT CARDS
FIRES-T3  543        C
FIRES-T3  544           40 WRITE (NOUT,450) NUM,KX(1),KX(2),MTIPE,BA
```

```
FIRES-T3  545              STOP
FIRES-T3  546        C
FIRES-T3  547           50 LM(NLM-1)=KX(1)
FIRES-T3  548              LM(NLM)=KX(2)
FIRES-T3  549              MMTYPE(N)=MTIPE
FIRES-T3  550              BAREA(N)=BA
FIRES-T3  551        C
FIRES-T3  552        C     OUTPUT
FIRES-T3  553        C
FIRES-T3  554           60 WRITE (NOUT,480) N,LM(NLM-1),LM(NLM),MMTYPE(N),BAREA(N)
FIRES-T3  555        C
FIRES-T3  556        C     DETERMINE BANDWIDTH AND STORE IF MAXIMUM
FIRES-T3  557        C
FIRES-T3  558              J=LM(NLM-1)-LM(NLM)+1
FIRES-T3  559              K=LM(NLM)-LM(NLM-1)+1
FIRES-T3  560              IF (J.GT.MBAND) MBAND=J
FIRES-T3  561              IF (K.GT.MBAND) MBAND=K
FIRES-T3  562           70 CONTINUE
FIRES-T3  563        C
FIRES-T3  564        C
FIRES-T3  565        C     T W O - D I M E N S I O N A L   E L E M E N T S
FIRES-T3  566        C
FIRES-T3  567        C
FIRES-T3  568           80 IF (NEL2D.EQ.0) GO TO 180
FIRES-T3  569              NLM=2*NEL1D
FIRES-T3  570              NUM=0
FIRES-T3  571              WRITE (NOUT,380) NEL2D
FIRES-T3  572              WRITE (NOUT,400)
FIRES-T3  573              DO 170 N=1,NEL2D
FIRES-T3  574              N1=N+NEL1D
FIRES-T3  575              NLM=NLM+4
FIRES-T3  576              IF (NUM-N) 90,100,100
FIRES-T3  577        C
FIRES-T3  578        C     READ ELEMENT CARD
FIRES-T3  579        C
FIRES-T3  580           90 READ (NIN,430) NUM,KX(1),KX(2),KX(3),KX(4),MTIPE,THK
FIRES-T3  581              IF (THK.EQ.0.0) THK=1.0
FIRES-T3  582              IF (NUM.GT.NEL2D) GO TO 120
FIRES-T3  583              IF (N.EQ.1) GO TO 110
FIRES-T3  584        C
FIRES-T3  585        C     GENERATE LM ARRAY
FIRES-T3  586        C
FIRES-T3  587          100 LM(NLM-3)=LM(NLM-7)+1
FIRES-T3  588              LM(NLM-2)=LM(NLM-6)+1
FIRES-T3  589              LM(NLM-1)=LM(NLM-5)+1
FIRES-T3  590              LM(NLM)=LM(NLM-4)+1
FIRES-T3  591              MMTYPE(N1)=MMTYPE(N1-1)
FIRES-T3  592              THICK(N)=THICK(N-1)
FIRES-T3  593          110 IF (NUM-N) 120,130,140
FIRES-T3  594        C
FIRES-T3  595        C     ERROR IN INPUT CARD
FIRES-T3  596        C
FIRES-T3  597          120 WRITE (NOUT,460) NUM,KX(1),KX(2),KX(3),KX(4),MTIPE,THK
FIRES-T3  598              STOP
FIRES-T3  599        C
FIRES-T3  600          130 LM(NLM-3)=KX(1)
FIRES-T3  601              LM(NLM-2)=KX(2)
FIRES-T3  602              LM(NLM-1)=KX(3)
FIRES-T3  603              LM(NLM)=KX(4)
FIRES-T3  604              MMTYPE(N1)=MTIPE
FIRES-T3  605              THICK(N)=THK
FIRES-T3  606        C
```

```
FIRES-T3  607          C     OUTPUT
FIRES-T3  608          C
FIRES-T3  609            140 WRITE (NOUT,490) N,LM(NLM-3),LM(NLM-2),LM(NLM-1),LM(NLM),MMTYPE(N1
FIRES-T3  610               1),THICK(N)
FIRES-T3  611          C
FIRES-T3  612          C     DETERMINE BANDWIDTH AND STORE IF MAXIMUM
FIRES-T3  613          C
FIRES-T3  614                  DO 160 L=1,4
FIRES-T3  615                  I=LM(NLM-4+L)
FIRES-T3  616                  DO 160 M=1,4
FIRES-T3  617                  J=LM(NLM-4+M)-I+1
FIRES-T3  618                  IF (MBAND-J) 150,160,160
FIRES-T3  619            150 MBAND=J
FIRES-T3  620            160 CONTINUE
FIRES-T3  621            170 CONTINUE
FIRES-T3  622          C
FIRES-T3  623          C
FIRES-T3  624          C     T H R E E - D I M E N S I O N A L   E L E M E N T S
FIRES-T3  625          C
FIRES-T3  626          C
FIRES-T3  627            180 IF (NEL3D.EQ.0) GO TO 350
FIRES-T3  628                  REWIND 6
FIRES-T3  629                  NLM=2*NEL1D+4*NEL2D
FIRES-T3  630                  NUM=0
FIRES-T3  631                  WRITE (NOUT,390) NEL3D
FIRES-T3  632                  WRITE (NOUT,410)
FIRES-T3  633                  DO 340 N=1,NEL3D
FIRES-T3  634                  N1=N+NEL1D+NEL2D
FIRES-T3  635                  NLM=NLM+8
FIRES-T3  636                  IF (NUM-N) 190,200,200
FIRES-T3  637          C
FIRES-T3  638          C     READ ELEMENT CARD
FIRES-T3  639          C
FIRES-T3  640            190 READ (NIN,440) NUM,(KX(I),I=1,8),MTIPE
FIRES-T3  641                  IF (NUM.GT.NEL3D) GO TO 230
FIRES-T3  642                  IF (N.EQ.1) GO TO 220
FIRES-T3  643          C
FIRES-T3  644          C     GENERATE LM ARRAY FOR MISSING ELEMENTS
FIRES-T3  645          C
FIRES-T3  646            200 CONTINUE
FIRES-T3  647                  DO 210 I=1,8
FIRES-T3  648            210 LM(NLM-8+I)=LM(NLM-16+I)+1
FIRES-T3  649                  MMTYPE(N1)=MMTYPE(N1-1)
FIRES-T3  650            220 IF (NUM-N) 230,240,260
FIRES-T3  651          C
FIRES-T3  652          C     ERROR IN INPUT CARDS
FIRES-T3  653          C
FIRES-T3  654            230 WRITE (NOUT,470) NUM,(KX(I),I=1,8),MTIPE
FIRES-T3  655                  STOP
FIRES-T3  656          C
FIRES-T3  657            240 CONTINUE
FIRES-T3  658                  DO 250 I=1,8
FIRES-T3  659            250 LM(NLM-8+I)=KX(I)
FIRES-T3  660                  MMTYPE(N1)=MTIPE
FIRES-T3  661          C
FIRES-T3  662          C     OUTPUT
FIRES-T3  663          C
FIRES-T3  664            260 WRITE (NOUT,500) N,(LM(NLM-9+I),I=1,9),MMTYPE(N1)
FIRES-T3  665          C
FIRES-T3  666          C     DETERMINE BANDWIDTH AND STORE IF MAXIMUM
FIRES-T3  667          C
FIRES-T3  668                  DO 280 L=1,8
```

```
FIRES-T3  669          I=LM(NLM-8+L)
FIRES-T3  670          DO 280 M=1,8
FIRES-T3  671          J=LM(NLM-8+M)-I+1
FIRES-T3  672          IF (MBAND-J) 270,280,280
FIRES-T3  673      270 MBAND=J
FIRES-T3  674      280 CONTINUE
FIRES-T3  675    C
FIRES-T3  676    C     CALCULATE ELEMENT DATA NEEDED LATER IN ANALYSIS AND STORE ON
FIRES-T3  677    C     TAPE 6
FIRES-T3  678    C
FIRES-T3  679          DO 290 I=1,8
FIRES-T3  680          J=LM(NLM-8+I)
FIRES-T3  681          XX(I)=X(J)
FIRES-T3  682          YY(I)=Y(J)
FIRES-T3  683      290 ZZ(I)=Z(J)
FIRES-T3  684          VOL=0.
FIRES-T3  685          DO 330 III=1,2
FIRES-T3  686          DO 330 JJJ=1,2
FIRES-T3  687          DO 330 KKK=1,2
FIRES-T3  688          SE=POS(III)
FIRES-T3  689          TE=POS(JJJ)
FIRES-T3  690          UE=POS(KKK)
FIRES-T3  691          DO 300 I=1,8
FIRES-T3  692          PSTU(I)=(1.+SE*SI(I))*(1.+TE*TI(I))*(1.+UE*UI(I))/8.
FIRES-T3  693          DPSTU(1,I)=SI(I)*(1.+TE*TI(I))*(1.+UE*UI(I))/8.
FIRES-T3  694          DPSTU(2,I)=TI(I)*(1.+SE*SI(I))*(1.+UE*UI(I))/8.
FIRES-T3  695      300 DPSTU(3,I)=UI(I)*(1.+SE*SI(I))*(1.+TE*TI(I))/8.
FIRES-T3  696          DO 310 I=1,3
FIRES-T3  697          CJAC(I,1)=0.
FIRES-T3  698          CJAC(I,2)=0.
FIRES-T3  699          CJAC(I,3)=0.
FIRES-T3  700          DO 310 J=1,8
FIRES-T3  701          CJAC(I,1)=CJAC(I,1)+DPSTU(I,J)*XX(J)
FIRES-T3  702          CJAC(I,2)=CJAC(I,2)+DPSTU(I,J)*YY(J)
FIRES-T3  703      310 CJAC(I,3)=CJAC(I,3)+DPSTU(I,J)*ZZ(J)
FIRES-T3  704          CALL INVMAT (CJAC,DETJ,3)
FIRES-T3  705          VOL=VOL+DETJ
FIRES-T3  706          DO 320 I=1,3
FIRES-T3  707          DO 320 J=1,8
FIRES-T3  708          B(I,J)=0.
FIRES-T3  709          DO 320 K=1,3
FIRES-T3  710      320 B(I,J)=B(I,J)+CJAC(I,K)*DPSTU(K,J)
FIRES-T3  711          WRITE (6) DETJ,(PSTU(I),I=1,8),((B(I,J),J=1,8),I=1,3)
FIRES-T3  712      330 CONTINUE
FIRES-T3  713          VOLUME(N)=VOL
FIRES-T3  714      340 CONTINUE
FIRES-T3  715    C
FIRES-T3  716    C
FIRES-T3  717    C     PRINT THE MAXIMUM BANDWIDTH
FIRES-T3  718    C
FIRES-T3  719    C
FIRES-T3  720      350 WRITE (NOUT,510) MBAND
FIRES-T3  721          RETURN
FIRES-T3  722    C
FIRES-T3  723    C
FIRES-T3  724    C
FIRES-T3  725    C
FIRES-T3  726      360 FORMAT (///20H  . . . . THERE ARE ,I5,23H  1-D ELEMENTS . . . . )
FIRES-T3  727      370 FORMAT (//5H ELMT,15H     I     J  MAT,5X,5H AREA/)
FIRES-T3  728      380 FORMAT (///20H  . . . . THERE ARE ,I5,23H  2-D ELEMENTS . . . . )
FIRES-T3  729      390 FORMAT (///20H  . . . . THERE ARE ,I5,23H  3-D ELEMENTS . . . . )
FIRES-T3  730      400 FORMAT (//5H ELMT,25H     I     J     K     L  MAT,5X,10H THICKNESS/)
```

```
FIRES-T3  731          410 FORMAT (//5H ELMT,50H     I     J     K     L     M     N     O     P  MAT
FIRES-T3  732             I      /)
FIRES-T3  733          420 FORMAT (4I5,F10.0)
FIRES-T3  734          430 FORMAT (6I5,F10.0)
FIRES-T3  735          440 FORMAT (10I5)
FIRES-T3  736          450 FORMAT (//20H ERROR IN EL INPUT  //4I5,F10.5)
FIRES-T3  737          460 FORMAT (//20H ERROR IN CL INPUT  //6I5,F10.5)
FIRES-T3  738          470 FORMAT (//20H ERROR IN EL INPUT  //10I5)
FIRES-T3  739          480 FORMAT (4I5,F10.5)
FIRES-T3  740          490 FORMAT (6I5,F15.5)
FIRES-T3  741          500 FORMAT (10I5)
FIRES-T3  742          510 FORMAT (///,31H     . . . MAXIMUM BANDWIDTH IS ,I4,6H . . .)
FIRES-T3  743              END
```

```
FIRES-T3  744              SUBROUTINE INVMAT (A,DETJ,NDIM)
FIRES-T3  745      C
FIRES-T3  746      C
FIRES-T3  747      C       SUBROUTINE *INVMAT* INVERTS THE JACOBIAN MATRIX
FIRES-T3  748      C
FIRES-T3  749      C
FIRES-T3  750              DIMENSION A(3,3), COFTR(3,3)
FIRES-T3  751      C
FIRES-T3  752      C
FIRES-T3  753              IF (NDIM.EQ.3) GO TO 20
FIRES-T3  754      C
FIRES-T3  755      C       2-D JACOBIAN
FIRES-T3  756      C
FIRES-T3  757              DETJ=A(1,1)*A(2,2)-A(1,2)*A(2,1)
FIRES-T3  758              COFTR(1,1)=A(2,2)
FIRES-T3  759              COFTR(1,2)=-A(2,1)
FIRES-T3  760              COFTR(2,1)=-A(1,2)
FIRES-T3  761              COFTR(2,2)=A(1,1)
FIRES-T3  762              DO 10 I=1,2
FIRES-T3  763              DO 10 J=1,2
FIRES-T3  764           10 A(I,J)=COFTR(J,I)/DETJ
FIRES-T3  765              RETURN
FIRES-T3  766      C
FIRES-T3  767      C       3-D JACOBIAN
FIRES-T3  768      C
FIRES-T3  769           20 DETJ=A(1,1)*(A(2,2)*A(3,3)-A(2,3)*A(3,2))-A(1,2)*(A(2,1)*A(3,3)-A(
FIRES-T3  770             12,3)*A(3,1))+A(1,3)*(A(2,1)*A(3,2)-A(2,2)*A(3,1))
FIRES-T3  771              COFTR(1,1)=A(2,2)*A(3,3)-A(2,3)*A(3,2)
FIRES-T3  772              COFTR(1,2)=-A(2,1)*A(3,3)+A(2,3)*A(3,1)
FIRES-T3  773              COFTR(1,3)=A(2,1)*A(3,2)-A(2,2)*A(3,1)
FIRES-T3  774              COFTR(2,1)=-A(1,2)*A(3,3)+A(1,3)*A(3,2)
FIRES-T3  775              COFTR(2,2)=A(1,1)*A(3,3)-A(1,3)*A(3,1)
FIRES-T3  776              COFTR(2,3)=-A(1,1)*A(3,2)+A(1,2)*A(3,1)
FIRES-T3  777              COFTR(3,1)=A(1,2)*A(2,3)-A(1,3)*A(2,2)
FIRES-T3  778              COFTR(3,2)=-A(1,1)*A(2,3)+A(1,3)*A(2,1)
FIRES-T3  779              COFTR(3,3)=A(1,1)*A(2,2)-A(1,2)*A(2,1)
FIRES-T3  780              DO 30 I=1,3
FIRES-T3  781              DO 30 J=1,3
FIRES-T3  782           30 A(I,J)=COFTR(J,I)/DETJ
FIRES-T3  783              RETURN
FIRES-T3  784              END
```

```
      SUBROUTINE MATRIAL (MATL,XYS,NSTORE)
C
C
C     SUBROUTINE *MATRIAL* INPUTS THE NECESSARY MATERIAL PROPERTIES.
C     THE VALUES OF THESE PROPERTIES ARE EITHER IN THE FORM OF A
C     CONSTANT OR A LINEARIZED FUNCTION OF TEMPERATURE.
C     NSTORE CONTAINS THE STARTING LOCATION FOR STORING THE LINEARIZED
C     MATERIAL PROPERTY FUNCTIONS AND ALSO RETURNS THE REQUIRED STORAGE
C     FOR XYS TO FIRES-T3.
C
C
      COMMON /CONTROL/ ITITLE(6),IREAD(80),NIN,NOUT,NPUNCH,NUMNP,NEL1D,N
     1EL2D,NEL3D,NUMEL,MBAND,NMAT,NFBC1D,NFBC2D,NFBC3D,NBCMAT,NBCTYP
      DIMENSION MATL(1), XYS(1)
      NSTORE=1
C
C     OUTPUT PAGE HEADING
C
      WRITE (NOUT,20)
      WRITE (NOUT,30)
      WRITE (NOUT,40) ITITLE
      WRITE (NOUT,50) NMAT
      WRITE (NOUT,30)
C
      DO 10 M=1,NMAT
      WRITE (NOUT,60) M
C
C     READ IN CONTROL VARIABLES. IF INTEGER VARIABLE IS ZERO THAN
C     MATERIAL VALUE IS CONSTANT. IF INTEGER CONSTANT IS GREATER THAN
C     2  THEN IT IS THE NUMBER OF POINTS REQUIRED TO DESCRIBE THE
C     LINEARIZED TEMPERATURE DEPENDENT FUNCTION
C
      READ (NIN,70) MK,MCP,MD
      MS=(M-1)*6
C
C     INPUT CONDUCTIVITY DATA
C
      WRITE (NOUT,80)
      MATL(MS+1)=NSTORE
      MATL(MS+2)=MK
      CALL MATIN (MK,XYS(NSTORE),XYS(NSTORE+MK),XYS(NSTORE+MK+MK))
      NSTORE=NSTORE+3*MK
      IF (MK.EQ.0) NSTORE=NSTORE+1
C
C     INPUT SPECIFIC HEAT DATA
C
      WRITE (NOUT,90)
      MATL(MS+3)=NSTORE
      MATL(MS+4)=MCP
      CALL MATIN (MCP,XYS(NSTORE),XYS(NSTORE+MCP),XYS(NSTORE+MCP+MCP))
      NSTORE=NSTORE+3*MCP
      IF (MCP.EQ.0) NSTORE=NSTORE+1
C
C     INPUT DENSITY DATA
C
      WRITE (NOUT,100)
      MATL(MS+5)=NSTORE
      MATL(MS+6)=MD
      CALL MATIN (MD,XYS(NSTORE),XYS(NSTORE+MD),XYS(NSTORE+MD+MD))
      NSTORE=NSTORE+3*MD
      IF (MD.EQ.0) NSTORE=NSTORE+1
C
```

```
FIRES-T3  847          10 CONTINUE
FIRES-T3  848     C
FIRES-T3  849            RETURN
FIRES-T3  850     C
FIRES-T3  851     C
FIRES-T3  852          20 FORMAT (1H6,5(/))
FIRES-T3  853          30 FORMAT (61H ***********************************************************
FIRES-T3  854            1******)
FIRES-T3  855          40 FORMAT (/5X50HFIRES-T3  -  FIRE RESPONSE OF STRUCTURES - THERMAL,/
FIRES-T3  856            1/1X,6A10)
FIRES-T3  857          50 FORMAT (/5X,43HTHERMAL PROPERTIES OF SYSTEM TO BE ANALYZED,//,5X,1
FIRES-T3  858            10HTHERE ARE ,I3,20H DIFFERENT MATERIALS,/)
FIRES-T3  859          60 FORMAT (////,26H  . . . . MATERIAL NUMBER ,I4,9H  . . . .)
FIRES-T3  860          70 FORMAT (3I5)
FIRES-T3  861          80 FORMAT (//7X,25H . . . CONDUCTIVITY . . .,)
FIRES-T3  862          90 FORMAT (//7X,26H . . . SPECIFIC HEAT . . .)
FIRES-T3  863         100 FORMAT (//7X,20H . . . DENSITY . . .)
FIRES-T3  864            END
```

```
FIRES-T3  865            SUBROUTINE MATIN (K,X,Y,S)
FIRES-T3  866     C
FIRES-T3  867     C
FIRES-T3  868     C      SUBROUTINE *MATIN* INPUTS FOR EACH MATERIAL ITS TEMPERATURE-
FIRES-T3  869     C      DEPENDENT PROPERTIES, CALCULATES SLOPES, AND PRINTS THE DATA.
FIRES-T3  870     C
FIRES-T3  871     C
FIRES-T3  872            COMMON /CONTROL/ ITITLE(6),IREAD(80),NIN,NOUT,NPUNCH,NUMNP,NEL1D,N
FIRES-T3  873           1EL2D,NEL3D,NUMEL,MHAND,NMAT,NFBC1D,NFBC2D,NFBC3D,NBCMAT,NBCTYP
FIRES-T3  874            DIMENSION X(1), Y(1), S(1)
FIRES-T3  875     C
FIRES-T3  876            IF (K.NE.0) GO TO 10
FIRES-T3  877     C
FIRES-T3  878     C      INPUT CONSTANT VALUE FUNCTION
FIRES-T3  879     C
FIRES-T3  880            READ (NIN,50) X(1)
FIRES-T3  881            WRITE (NOUT,60) X(1)
FIRES-T3  882            RETURN
FIRES-T3  883     C
FIRES-T3  884     C      INPUT VARIABLE VALUE FUNCTION
FIRES-T3  885     C
FIRES-T3  886         10 CONTINUE
FIRES-T3  887     C
FIRES-T3  888     C      CHECK K FOR AN ALLOWABLE NUMBER OF POINTS IN MATERIAL FUNCTION
FIRES-T3  889     C
FIRES-T3  890            IF (K.EQ.1.OR.K.LT.0) GO TO 40
FIRES-T3  891            READ (NIN,50) (X(I),Y(I),I=1,K)
FIRES-T3  892            M=K-1
FIRES-T3  893     C
FIRES-T3  894     C      DETERMINE THE SLOPES OF THE LINEAR SEGMENTS OF THE MATERIAL
FIRES-T3  895     C      FUNCTIONS
FIRES-T3  896     C
FIRES-T3  897            DO 20 I=1,M
FIRES-T3  898         20 S(I)=(Y(I+1)-Y(I))/(X(I+1)-X(I))
FIRES-T3  899            WRITE (NOUT,70)
FIRES-T3  900     C
FIRES-T3  901     C      OUTPUT THE FUNCTION IF IT IS VARIABLE
FIRES-T3  902     C
FIRES-T3  903            DO 30 I=1,M
```

```
FIRES-T3  904          WRITE (NOUT,80) I,X(I),Y(I)
FIRES-T3  905          WRITE (NOUT,90) S(I)
FIRES-T3  906       30 CONTINUE
FIRES-T3  907          WRITE (NOUT,80) K,X(K),Y(K)
FIRES-T3  908          RETURN
FIRES-T3  909    C
FIRES-T3  910    C
FIRES-T3  911       40 WRITE (NOUT,100) K
FIRES-T3  912          STOP
FIRES-T3  913    C
FIRES-T3  914    C
FIRES-T3  915       50 FORMAT (8E10.0)
FIRES-T3  916       60 FORMAT (/,39H  MATERIAL PARAMETER OF CONSTANT VALUE ,G11.3)
FIRES-T3  917       70 FORMAT (/5X,19HNODE     TEMPERATURE,6X,5HVALUE,7X,5HSLOPE,/)
FIRES-T3  918       80 FORMAT (I9,F13.1,6X,G11.3)
FIRES-T3  919       90 FORMAT (39X,G11.3)
FIRES-T3  920      100 FORMAT (///,44H  ------------PROGRAM TERMINATED------------,/,14H
FIRES-T3  921         1  INPUT ERROR,/,23H   CONTROL CONSTANT IS ,I5,22H AND IT MUST BE E
FIRES-T3  922         2ITHER,/,34H   0 OR GREATER THAN OR EQUAL TO 2)
FIRES-T3  923          END
```

```
FIRES-T3  924          FUNCTION VMAT (K,X,Y,S,T,NAME)
FIRES-T3  925    C
FIRES-T3  926    C
FIRES-T3  927    C     FUNCTION *VMAT* CALCULATES THE VALUE OF THE TEMPERATURE-DEPENDENT
FIRES-T3  928    C     VARIABLES REQUIRED IN THE THERMAL ANALYSIS
FIRES-T3  929    C
FIRES-T3  930    C
FIRES-T3  931          COMMON /CONTROL/ ITITLE(6),IREAD(80),NIN,NOUT,NPUNCH,NUMNE,NEL1D,N
FIRES-T3  932         1EL2D,NEL3D,NUMEL,MBAND,NMAT,NFBC1D,NFBC2D,NFBC3D,NBCMAT,NBCTYP
FIRES-T3  933          DIMENSION X(1), Y(1), S(1)
FIRES-T3  934    C
FIRES-T3  935          IF (K.NE.0) GO TO 10
FIRES-T3  936          VMAT=X(1)
FIRES-T3  937          RETURN
FIRES-T3  938    C
FIRES-T3  939       10 I=0
FIRES-T3  940       20 I=I+1
FIRES-T3  941          IF (I.GT.K) GO TO 50
FIRES-T3  942          IF (T-X(I)) 40,30,20
FIRES-T3  943       30 VMAT=Y(I)
FIRES-T3  944          RETURN
FIRES-T3  945    C
FIRES-T3  946       40 IF (I.EQ.1) GO TO 50
FIRES-T3  947          VMAT=Y(I-1)+S(I-1)*(T-X(I-1))
FIRES-T3  948          RETURN
FIRES-T3  949    C
FIRES-T3  950    C
FIRES-T3  951       50 WRITE (NOUT,60) NAME,T,X(1),X(K)
FIRES-T3  952          STOP
FIRES-T3  953    C
FIRES-T3  954    C
FIRES-T3  955    C
FIRES-T3  956       60 FORMAT (///,48H  -------------PROGRAM TERMINATED -------------,/,
FIRES-T3  957         150H    BOUNDS OF CURVE DESCRIBING MATERIAL PARAMETER ,A10,15H HAVE
FIRES-T3  958         2 BEEN EXCEEDED,/,23H   THE TEMPERATURE WAS ,F10.3,20H THE LOWER BO
FIRES-T3  959         3UND IS ,F10.3,24H AND THE UPPER BOUND IS ,F10.3)
FIRES-T3  960          END
```

```
FIRES-T3  961                 SUBROUTINE CONVERG (NTOTAL)
FIRES-T3  962          C
FIRES-T3  963          C
FIRES-T3  964          C      SUBROUTINE *CONVERG* INPUTS THE CONVERGENCE CRITERIA CONTROLLING
FIRES-T3  965          C      THE NATURE OF THE THERMAL ANALYSIS.  THE PROGRAM CONTAINS THE
FIRES-T3  966          C      THE CAPABILITIES FOR ITERATIVE SOLUTIONS DEALING WITH  THE ENTIRE
FIRES-T3  967          C      SYSTEM AND/OR THE FIRE BOUNDARY CONDITIONS
FIRES-T3  968          C
FIRES-T3  969          C
FIRES-T3  970                 COMMON /CONTROL/ ITITLE(6),IREAD(80),NIN,NOUT,NPUNCH,NUMNP,NEL1D,N
FIRES-T3  971                1EL2D,NEL3D,NUMEL,MBAND,NMAT,NFBC1D,NFBC2D,NFBC3D,NBCMAT,NBCTYP
FIRES-T3  972                 COMMON /CONRG/ NCONV,CONV,BETA,NCONU,CONU,ALPHA
FIRES-T3  973          C
FIRES-T3  974          C      OUTPUT PAGE HEADING
FIRES-T3  975          C
FIRES-T3  976                 WRITE (NOUT,20)
FIRES-T3  977                 WRITE (NOUT,30)
FIRES-T3  978                 WRITE (NOUT,40) ITITLE
FIRES-T3  979                 WRITE (NOUT,50)
FIRES-T3  980                 WRITE (NOUT,30)
FIRES-T3  981                 WRITE (NOUT,60)
FIRES-T3  982          C
FIRES-T3  983          C      CONVERGENCE DETERMINED WHEN
FIRES-T3  984          C
FIRES-T3  985          C         2*ABS(T(I)-T(I-1)/T(I)+T(I-1) .LESS THAN. CONV OR CONU
FIRES-T3  986          C
FIRES-T3  987          C      AND IF CONVERGENCE IS NOT ACHIEVED THE NEXT ESTIMATE OF THE
FIRES-T3  988          C      SYSTEMS TEMPERATURES IS OBTAINED THROUGH
FIRES-T3  989          C
FIRES-T3  990          C         T(I+1) = T(I) + BETA (OR ALPHA) *(T(I)-T(I-1))
FIRES-T3  991          C
FIRES-T3  992          C         WHERE      SYSTEM          FIRE BC
FIRES-T3  993          C                    CRITERIA        CRITERIA
FIRES-T3  994          C
FIRES-T3  995          C                      NCONU           NCONV    - NUMBER OF PERMISSIBLE
FIRES-T3  996          C                                                 ITERATIONS(0-IF PARTICULAR
FIRES-T3  997          C                                                 ITERATION IS NOT DESIRED)
FIRES-T3  998          C                      CONU            CONV     - PERMISSIBLE RELATIVE ERROR
FIRES-T3  999          C                      ALPHA           BETA     - OVER RELAXATION FACTOR
FIRES-T3 1000          C
FIRES-T3 1001          C      INPUT CONVERGENCE CRITERIA
FIRES-T3 1002          C
FIRES-T3 1003                 READ (NIN,70) NCONV,CONV,BETA,NCONU,CONU,ALPHA
FIRES-T3 1004                 IF (NCONU.EQ.0) GO TO 10
FIRES-T3 1005          C
FIRES-T3 1006          C      OUTPUT SYSTEM CONVERGENCE CRITERIA
FIRES-T3 1007          C
FIRES-T3 1008                 WRITE (NOUT,80) CONU,NCONU,ALPHA
FIRES-T3 1009              10 CONTINUE
FIRES-T3 1010          C
FIRES-T3 1011          C      OUTPUT FIRE BOUNDARY CONDITION CONVERGENCE CRITERIA
FIRES-T3 1012          C
FIRES-T3 1013                 WRITE (NOUT,90) CONV,NCONV,BETA
FIRES-T3 1014          C
FIRES-T3 1015          C      DIVIDE PERMISSBLE ERROR BY TWO
FIRES-T3 1016          C
FIRES-T3 1017                 CONV=CONV*0.50
FIRES-T3 1018                 CONU=CONU*0.50
FIRES-T3 1019          C
FIRES-T3 1020          C
FIRES-T3 1021          C      STORAGE REQUIREMENT FOR BLANK COMMON IS NOW PRINTED
FIRES-T3 1022          C
```

```
FIRES-T3 1023          C
FIRES-T3 1024                WRITE (NOUT,100) NTOTAL,NTOTAL
FIRES-T3 1025                RETURN
FIRES-T3 1026          C
FIRES-T3 1027          C
FIRES-T3 1028             20 FORMAT (1H6,5(/))
FIRES-T3 1029             30 FORMAT (61H ***********************************************************
FIRES-T3 1030               1******)
FIRES-T3 1031             40 FORMAT (/5X50HFIRES-T3  -  FIRE RESPONSE OF STRUCTURES - THERMAL,/
FIRES-T3 1032               1/1X,6A10)
FIRES-T3 1033             50 FORMAT (/5X,46HINFORMATION RELEVANT TO THE ANALYSIS PROCEDURE,/)
FIRES-T3 1034             60 FORMAT (////38H  . . . . CONVERGENCE CRITERIA . . . .)
FIRES-T3 1035             70 FORMAT (I5,2F10.0,I5,2F10.0)
FIRES-T3 1036             80 FORMAT (//40H  CONVERGENCE CRITERIA FOR ENTIRE SYSTEM//,23H    PER
FIRES-T3 1037               1MISSIBLE ERROR =,F10.5/,34H    MAXIMUM NUMBER OF ITERATIONS =,I5/,
FIRES-T3 1038               212H     ALPHA =,F10.4)
FIRES-T3 1039             90 FORMAT (//,46H  CONVERGENCE CRITERIA FOR BOUNDARY CONDITIONS//,24H
FIRES-T3 1040               1     PERMISSIBLE ERROR =,F10.5/,35H     MAXIMUM NUMBER OF ITERATIO
FIRES-T3 1041               2NS =,I5,11H     BETA =,F10.4)
FIRES-T3 1042            100 FORMAT (////,54H  . . . . STORAGE REQUIREMENT FOR BLANK COMMON . .
FIRES-T3 1043               1 . .,//5X,20HSIZE BLANK COMMON = ,I10,10H (DECIMAL),/23X,5H=    ,C
FIRES-T3 1044               27,8H (OCTAL))
FIRES-T3 1045                END
```

```
FIRES-T3 1046                SUBROUTINE HEATFLO (X,Y,Z,KODE,D,MA,T1,T2,T3,LM,MMTYPE,BAREA,THICK
FIRES-T3 1047               1,MATL,XYS,MAT,FXYS,LI,LJ,LK,LL,LMAT,LFIRE,AIJKL,LELEM,IEXO,EXYS,IE
FIRES-T3 1048               2L,IMAT,VEL,Q,T,B,AT,A,VOLUME,NP,NUMFAC)
FIRES-T3 1049          C
FIRES-T3 1050          C
FIRES-T3 1051          C     SUBROUTINE *HEATFLO* IS THE THERMAL ANALYSIS CONTROLLER
FIRES-T3 1052          C
FIRES-T3 1053          C
FIRES-T3 1054                COMMON /CONTROL/ ITITLE(6),IREAD(80),NIN,NOUT,NPUNCH,NUMNP,NEL1D,N
FIRES-T3 1055               1EL2D,NEL3D,NUMEL,MBAND,NMAT,NFBC1D,NFBC2D,NFBC3D,NBCMAT,NBCTYP
FIRES-T3 1056                COMMON /EXOTH/ NINT1D,NINT2D,NINT3D,NINT,NOINT
FIRES-T3 1057                COMMON /CONRG/ NCONV,CONV,BETA,NCONU,CONU,ALPHA
FIRES-T3 1058                DIMENSION X(1), Y(1), Z(1), KODE(1), LM(1), MMTYPE(1), LELEM(1), M
FIRES-T3 1059               1ATL(1), XYS(1), MAT(1), FXYS(1), LI(1), LJ(1), LK(1), LL(1), LMAT(
FIRES-T3 1060               21), LFIRE(1), AIJKL(1), Q(1), T(1), B(1), AT(1), A(NP,1), D(1), MA
FIRES-T3 1061               3(1), T1(1), T2(1), T3(1), THICK(1), BAREA(1), IEXO(1), EXYS(1), IE
FIRES-T3 1062               4L(1), IMAT(1), VEL(1), VOLUME(1)
FIRES-T3 1063                DIMENSION TFIRE(4)
FIRES-T3 1064          C
FIRES-T3 1065          C     INITIALIZE THE SYSTEM
FIRES-T3 1066          C
FIRES-T3 1067                IP1=0
FIRES-T3 1068                IP2=0
FIRES-T3 1069                SDT=0.0
FIRES-T3 1070                DS=0.0
FIRES-T3 1071          C
FIRES-T3 1072          C     INPUT INITIAL TIME STEP CARD
FIRES-T3 1073          C     WHERE    IA - CONTROL WORD (STEP)
FIRES-T3 1074          C              MDT - SEQUENCE COUNTER - INITIAL VALUE
FIRES-T3 1075          C              TIME - SYSTEM CLOCK - INITIAL VALUE
FIRES-T3 1076          C              TEMP - INDICATOR FOR INITIAL TEMPERATURE - IF NON-ZERO
FIRES-T3 1077          C                     THEN TAKEN AS UNIFORM INITIAL TEMPERATURE OF SYSTEM
FIRES-T3 1078          C              JP - IDENTIFIER FOR PUNCHED OUTPUT
FIRES-T3 1079          C
```

```
FIRES-T3 1080          READ (NIN,370) IA,MDT,TIME,TEMP,JP
FIRES-T3 1081     C
FIRES-T3 1082     C    OUTPUT HEADING FOR INITIAL TIME STEP
FIRES-T3 1083     C
FIRES-T3 1084          WRITE (NOUT,380)
FIRES-T3 1085          WRITE (NOUT,390)
FIRES-T3 1086          WRITE (NOUT,400) ITITLE
FIRES-T3 1087     C
FIRES-T3 1088          IF (IA.NE.4HSTEP) GO TO 40
FIRES-T3 1089     C
FIRES-T3 1090          WRITE (NOUT,410) MDT,TIME
FIRES-T3 1091          WRITE (NOUT,390)
FIRES-T3 1092     C
FIRES-T3 1093     C    INITIALIZE TEMPERATURES
FIRES-T3 1094     C
FIRES-T3 1095          IF (TEMP.NE.0.0) GO TO 10
FIRES-T3 1096          READ (NIN,420) (T(I),I=1,NUMNP)
FIRES-T3 1097          GO TO 30
FIRES-T3 1098       10 DO 20 I=1,NUMNP
FIRES-T3 1099       20 T(I)=TEMP
FIRES-T3 1100     C
FIRES-T3 1101     C    OUTPUT INITIAL TEMPERATURES
FIRES-T3 1102     C
FIRES-T3 1103       30 CALL PROUT (4,T,AT,LM,TI,D,MAIN,NCON,I)
FIRES-T3 1104          GO TO 50
FIRES-T3 1105     C
FIRES-T3 1106       40 CONTINUE
FIRES-T3 1107     C
FIRES-T3 1108     C    TERMINATE PROGRAM - INITIAL TIME STEP CARD ERROR
FIRES-T3 1109     C
FIRES-T3 1110          WRITE (NOUT,430) IA,MDT,TIME,TEMP,JP
FIRES-T3 1111          STOP
FIRES-T3 1112     C
FIRES-T3 1113       50 CONTINUE
FIRES-T3 1114     C
FIRES-T3 1115     C    READ TIME STEP CARD
FIRES-T3 1116     C    WHERE    IA - CONTROL WORD (STEP)
FIRES-T3 1117     C             MDT - SEQUENCE NUMBER
FIRES-T3 1118     C             DT - TIME STEP INTERVAL
FIRES-T3 1119     C             ITOF - NUMBER OF NON-ZERO TEMPERATURE OR FLOW B.C.
FIRES-T3 1120     C             TFIRE(I) - TEMPERATURE OF FIRE FOR CURRENT TIME STEP
FIRES-T3 1121     C                        I CAN VARY FROM 1 TO 4
FIRES-T3 1122     C             I1 - PRINTED OUTPUT OPTION
FIRES-T3 1123     C                  0 - NO PRINTED OUTPUT
FIRES-T3 1124     C                  1 - OUTPUT NODAL POINT TEMPERATURES
FIRES-T3 1125     C                  2 - OUTPUT ELEMENT TEMPERATURES
FIRES-T3 1126     C                  3 - OUTPUT BOTH NODAL AND ELEMENT TEMPERATURES
FIRES-T3 1127     C             I2 - PUNCHED OUTPUT OPTION
FIRES-T3 1128     C                  CODE SAME AS FOR PRINTED DATA
FIRES-T3 1129     C             I6 - DEBUGGING OUTPUT OPTION
FIRES-T3 1130     C             I7 - CHANGE OF FIRE SURFACE ELEMENTS OPTION
FIRES-T3 1131     C
FIRES-T3 1132       60 READ (NIN,440) IA,MDT,DT,ITOF,TFIRE(1),TFIRE(2),TFIRE(3),TFIRE(4),
FIRES-T3 1133         I1,I2,I6,I7
FIRES-T3 1134          MAIN=0
FIRES-T3 1135          MDT=MDT+1
FIRES-T3 1136     C
FIRES-T3 1137     C    CHECK SEQUENCING OF TIME STEP CARD
FIRES-T3 1138     C
FIRES-T3 1139          IF (MDT.EQ.MDT.AND.IA.EQ.4HSTEP) GO TO 90
FIRES-T3 1140     C
FIRES-T3 1141     C    PROGRAM TERMINATED IF SEQUENCING ERROR
```

```
FIRES-T3 1142          C
FIRES-T3 1143                WRITE (NOUT,450)
FIRES-T3 1144             70 WRITE (NOUT,460) IA,NDT,DT,ITOF,TFIRE(1),TFIRE(2),TFIRE(3),TFIRE(4
FIRES-T3 1145               1),I1,I2,I6,I7
FIRES-T3 1146                STOP
FIRES-T3 1147             80 WRITE (NOUT,470)
FIRES-T3 1148                GO TO 70
FIRES-T3 1149          C
FIRES-T3 1150          C     ESTABLISH TIME INTERVAL DT
FIRES-T3 1151          C
FIRES-T3 1152             90 IF (DT) 100,110,120
FIRES-T3 1153            100 WRITE (NOUT,480)
FIRES-T3 1154                RETURN
FIRES-T3 1155          C
FIRES-T3 1156            110 IF (DS.EQ.0.0) GO TO 80
FIRES-T3 1157                DT=DS
FIRES-T3 1158                GO TO 130
FIRES-T3 1159            120 DS=DT
FIRES-T3 1160            130 CONTINUE
FIRES-T3 1161          C
FIRES-T3 1162                TIME=TIME+DT
FIRES-T3 1163          C
FIRES-T3 1164          C     OUTPUT HEADING FOR TIME STEP
FIRES-T3 1165          C
FIRES-T3 1166                WRITE (NOUT,380)
FIRES-T3 1167                WRITE (NOUT,390)
FIRES-T3 1168                WRITE (NOUT,400) ITITLE
FIRES-T3 1169                WRITE (NOUT,490) NDT,TIME,DT
FIRES-T3 1170                WRITE (NOUT,390)
FIRES-T3 1171                WRITE (NOUT,500) ITOF
FIRES-T3 1172                IF (NUMFBC.EQ.0) GO TO 140
FIRES-T3 1173                WRITE (NOUT,510) (I,TFIRE(I),I=1,4)
FIRES-T3 1174            140 CONTINUE
FIRES-T3 1175                DT2=1./DT
FIRES-T3 1176          C
FIRES-T3 1177          C
FIRES-T3 1178          C     B E G I N N I N G   O F   S Y S T E M   I T E R A T I O N
FIRES-T3 1179          C
FIRES-T3 1180          C
FIRES-T3 1181            150 MAIN=MAIN+1
FIRES-T3 1182          C
FIRES-T3 1183          C     SAVE THE INITIALLY ASSUMED TEMPERATURES IN VECTOR T1
FIRES-T3 1184          C
FIRES-T3 1185                DO 160 N=1,NUMNP
FIRES-T3 1186            160 T1(N)=T(N)
FIRES-T3 1187                IF (I6.NE.0) CALL PROUT (1,T,AT,LM,T1,B,MAIN,NCCN,I1)
FIRES-T3 1188          C
FIRES-T3 1189          C     FORM CONDUCTIVITY MATRIX AND STORE IN MATRIX A, AND ALSO FORM
FIRES-T3 1190          C     THE HEAT CAPACITY MATRIX AND STORE IN VECTOR Q
FIRES-T3 1191          C
FIRES-T3 1192                CALL HCONDC (AT,A,NUMNP,MATL,XYS,T,Q,LM,MMTYPE,BAREA,THICK,X,Y,Z,V
FIRES-T3 1193               1OLUME)
FIRES-T3 1194          C
FIRES-T3 1195          C     INITIALIZE HEAT LOAD VECTOR TO 0.0 - VECTOR B
FIRES-T3 1196          C
FIRES-T3 1197                DO 170 I=1,NUMNP
FIRES-T3 1198            170 B(I)=0.0
FIRES-T3 1199          C
FIRES-T3 1200          C     ADD INTERNAL HEAT GENERATION TO VECTOR B
FIRES-T3 1201          C
FIRES-T3 1202                IF (NINT.EQ.0) GO TO 180
FIRES-T3 1203                CALL GEXC (LM,IEL,IMAT,IEXO,EXYS,AT,MATL,VEL,MMTYPE,B,XYS,TIME)
```

```
FIRES-T3 1204          C
FIRES-T3 1205          C     INPUT ANY NON-ZERO TEMPERATURE AND FLOW BOUNDARY CONDITONS
FIRES-T3 1206          C     AND ADD THE RELATED TERMS TO MATRIX A AND VECTOR B
FIRES-T3 1207          C     .
FIRES-T3 1208            180 CALL HATEMP (ITOF,D,KODE,B,A,NUMNP,MAIN,T3,G)
FIRES-T3 1209          C
FIRES-T3 1210          C     ADD CAPACITY TERMS TO CONDUCTIVITY MATRIX A
FIRES-T3 1211          C
FIRES-T3 1212                DO 200 N=1,NUMNP
FIRES-T3 1213                IF (KODE(N).EQ.4HTEMP) GO TO 200
FIRES-T3 1214                IF (Q(N)) 190,200,190
FIRES-T3 1215            190 A(N,1)=A(N,1)+Q(N)*DT2
FIRES-T3 1216            200 CONTINUE
FIRES-T3 1217          C
FIRES-T3 1218          C     TRIANGULARIZE THE MODIFIED CONDUCTIVITY MATRIX
FIRES-T3 1219          C
FIRES-T3 1220                CALL MSYM (1,B,MA,A,NUMNP)
FIRES-T3 1221          C
FIRES-T3 1222                IF (MAIN.NE.1) GO TO 220
FIRES-T3 1223          C
FIRES-T3 1224          C     CALCULATE EFFECTIVE LOAD VECTOR B
FIRES-T3 1225          C
FIRES-T3 1226          C     CALCULATE CAPACITY MATRIX CONTRIBUTION TO THE EFFECTIVE LOAD
FIRES-T3 1227          C     AND SAVE IN VECTOR T2
FIRES-T3 1228          C
FIRES-T3 1229                DO 210 II=1,NUMNP
FIRES-T3 1230                IF (KODE(II).EQ.4HTEMP) GO TO 210
FIRES-T3 1231                T2(II)=Q(II)*T(II)*DT2
FIRES-T3 1232            210 CONTINUE
FIRES-T3 1233            220 DO 230 II=1,NUMNP
FIRES-T3 1234                IF (KODE(II).EQ.4HTEMP) GO TO 230
FIRES-T3 1235                B(II)=B(II)+T2(II)
FIRES-T3 1236            230 Q(II)=B(II)
FIRES-T3 1237                NCON=0
FIRES-T3 1238                IF (NUMFBC.EQ.0) GO TO 260
FIRES-T3 1239          C
FIRES-T3 1240          C     IF FIRE BOUNDARY CONDITION SURFACE CONFIGURATION IS TO BE CHANGED
FIRES-T3 1241          C     ON THIS TIME STEP, INPUT THE NEW DATA
FIRES-T3 1242          C
FIRES-T3 1243                IF (I7.EQ.0) GO TO 250
FIRES-T3 1244                CALL FIREBC (X,Y,Z,KODE,BAREA,THICK,LI,LJ,LK,LL,LMAT,LFIRE,AIJKL,L
FIRES-T3 1245               1ELEM)
FIRES-T3 1246          C
FIRES-T3 1247          C
FIRES-T3 1248          C     B E G I N N I N G   O F   F I R E   B.   C.   I T E R A T I O N
FIRES-T3 1249          C
FIRES-T3 1250          C
FIRES-T3 1251            240 CONTINUE
FIRES-T3 1252          C
FIRES-T3 1253          C     CALCULATE THE HEAT FLOW RELATED TO THE FIRE B.C.
FIRES-T3 1254          C
FIRES-T3 1255            250 CALL FIRE (LI,LJ,LK,LL,LMAT,LFIRE,AIJKL,MAT,FXYS,T,TFIRE,P)
FIRES-T3 1256                NCON=NCON+1
FIRES-T3 1257          C
FIRES-T3 1258          C     CALCULATE THE TEMPERATURES THROUGH BACK SUBSTITUTION
FIRES-T3 1259          C
FIRES-T3 1260            260 CALL MSYM (2,B,MA,A,NUMNP)
FIRES-T3 1261          C
FIRES-T3 1262                IF (NUMFBC.EQ.0) GO TO 280
FIRES-T3 1263                IF (NCONV.EQ.0) GO TO 280
FIRES-T3 1264                IF (IO.NE.0) CALL OPOUT (2,T,AT,LM,T1,H,MAIN,NCON,II)
FIRES-T3 1265          C
```

```
FIRES-T3 1266          C     CHECK FOR CONVERGENCE OF FIRE B.C. CYCLE AGAINST PERMISSIBLE ERROR
FIRES-T3 1267          C
FIRES-T3 1268                DO 270 N=1,NUMNP
FIRES-T3 1269                DX=ABS(B(N)-T(N))
FIRES-T3 1270                DY=CONV*ABS(B(N)+T(N))
FIRES-T3 1271                IF (DX.GT.DY) GO TO 300
FIRES-T3 1272            270 CONTINUE
FIRES-T3 1273            280 DO 290 N=1,NUMNP
FIRES-T3 1274            290 T(N)=B(N)
FIRES-T3 1275                GO TO 320
FIRES-T3 1276          C
FIRES-T3 1277          C     IF CONVERGENCE NOT OBTAINED CHECK FOR POSSIBILITY OF EXCEEDING
FIRES-T3 1278          C     PERMISSIBLE NUMBER OF CYCLES FOR FIRE B.C.
FIRES-T3 1279          C
FIRES-T3 1280            300 IF (NCON.GT.NCONV) CALL PROUT (3,T,AT,LM,T1,B,MAIN,NCON,I1)
FIRES-T3 1281          C
FIRES-T3 1282          C     ESTIMATE NEW APPROXIMATION OF TEMPERATURES FOR FIRE B.C.
FIRES-T3 1283          C
FIRES-T3 1284                DO 310 JJ=1,NUMNP
FIRES-T3 1285                DX=B(JJ)-T(JJ)
FIRES-T3 1286                T(JJ)=B(JJ)+BETA*DX
FIRES-T3 1287            310 B(JJ)=C(JJ)
FIRES-T3 1288                GO TO 240
FIRES-T3 1289          C
FIRES-T3 1290            320 IF (NCONU.EQ.0) GO TO 360
FIRES-T3 1291          C
FIRES-T3 1292          C     CHECK CONVERGENCE OF SYSTEM CYCLE AGAINST PERMISSIBLE ERROR
FIRES-T3 1293          C
FIRES-T3 1294                DO 330 N=1,NUMNP
FIRES-T3 1295                DX=ABS(T(N)-T1(N))
FIRES-T3 1296                DY=CONU*ABS(T(N)+T1(N))
FIRES-T3 1297                IF (DX.GT.DY) GO TO 340
FIRES-T3 1298            330 CONTINUE
FIRES-T3 1299                GO TO 360
FIRES-T3 1300          C
FIRES-T3 1301          C     CHECK TO SEE IF NUMBER OF SYSTEM ITERATIONS HAS EXCEEDED
FIRES-T3 1302          C     PERMISSIBLE NUMBER OF ITERATIONS
FIRES-T3 1303          C
FIRES-T3 1304            340 IF (MAIN.GT.NCONU) CALL PROUT (3,T,AT,LM,T1,B,MAIN,NCON,I1)
FIRES-T3 1305          C
FIRES-T3 1306          C     ESTIMATE NEW APPROXIMATION OF SYSTEMS TEMPERATURES
FIRES-T3 1307          C
FIRES-T3 1308                DO 350 N=1,NUMNP
FIRES-T3 1309                DX=T(N)-T1(N)
FIRES-T3 1310            350 T(N)=T(N)+ALPHA*DX
FIRES-T3 1311                GO TO 150
FIRES-T3 1312            360 CONTINUE
FIRES-T3 1313          C
FIRES-T3 1314          C     CHECK FOR DESIRED OUTPUT
FIRES-T3 1315          C
FIRES-T3 1316                IF (I1.NE.0) CALL PROUT (4,T,AT,LM,T1,B,MAIN,NCON,I1)
FIRES-T3 1317                IF (I2.NE.0) CALL PUOUT (I1,I2,T,AT,X,Y,Z,TIME,IP1,IP2,LM,JP)
FIRES-T3 1318                NC=NCON-1
FIRES-T3 1319                NS=MAIN-1
FIRES-T3 1320                WRITE (NOUT,530) NS
FIRES-T3 1321                WRITE (NOUT,520) NC
FIRES-T3 1322                GO TO 60
FIRES-T3 1323          C
FIRES-T3 1324          C
FIRES-T3 1325          C
FIRES-T3 1326            370 FORMAT (A4,I6,2F10.0,2X,A3)
FIRES-T3 1327            380 FORMAT (1H0,5(/))
```

```
FIRES-T3 1328          390 FORMAT (61H ***********************************************
FIRES-T3 1329             1******)
FIRES-T3 1330          400 FORMAT (/5X50HFIRES-T3  -  FIRE RESPONSE OF STRUCTURES - THERMAL,/
FIRES-T3 1331             1/1X,6A10)
FIRES-T3 1332          410 FORMAT (/1X,27HINITIAL SEQUENCE NUMBER IS ,I4,21H AND INITIAL TIME
FIRES-T3 1333             1 IS ,F8.2/)
FIRES-T3 1334          420 FORMAT (7(4X,F6.1))
FIRES-T3 1335          430 FORMAT (5(/),69H - - - - PROGRAM TERMINATED - ERROR IN INITIAL TIM
FIRES-T3 1336             1E STEP CARD - - - -,//1X,A4,I6,2F10.2,2X,A3)
FIRES-T3 1337          440 FORMAT (A4,I6,F10.0,I5,4F10.0,4I3)
FIRES-T3 1338          450 FORMAT (///,43H  TIME STEP CARD OUT OF SEQUENCE - CARD NO.,I5/,12H
FIRES-T3 1339             1  INPUT CARD)
FIRES-T3 1340          460 FORMAT (//,57H  - - - - PROGRAM TERMINATED - TIME STEP CARD WAS -
FIRES-T3 1341             1- - -,//1X,A4,I6,F10.2,I5,4F10.2,4I5)
FIRES-T3 1342          470 FORMAT (///,30H  NO TIME INTERVAL ESTABLISHED)
FIRES-T3 1343          480 FORMAT (///,19H  PROBLEM COMPLETED)
FIRES-T3 1344          490 FORMAT (/2X,17HTIME STEP NUMBER ,I4,8H - TIME ,F7.3,13H - TIME STE
FIRES-T3 1345             1P ,F7.3/)
FIRES-T3 1346          500 FORMAT (/5X,50H NUMBER OF NON-ZERO FLOW OR TEMPERATURE CONDITIONS,
FIRES-T3 1347             1I5)
FIRES-T3 1348          510 FORMAT (/5X,24H FIRE BOUNDARY CONDITION,4(/7X,5HFIRE(,I1,4H) = ,F1
FIRES-T3 1349             10.3,2X))
FIRES-T3 1350          520 FORMAT (I5,32H O. C. ITERATIONS WERE PERFORMED)
FIRES-T3 1351          530 FORMAT (//I5,33H SYSTEM ITERATIONS WERE PERFORMED)
FIRES-T3 1352              END
```

```
FIRES-T3 1353              SUBROUTINE HCONDC (AT,A,NP,MATL,XYS,T,Q,LM,MMTYPE,BAREA,THICK,X,Y,
FIRES-T3 1354             1Z,VOLUME)
FIRES-T3 1355       C
FIRES-T3 1356       C
FIRES-T3 1357       C      SUBROUTINE *HCONDC* FORMS CONDUCTIVITY AND HEAT CAPACITY MATRICES
FIRES-T3 1358       C
FIRES-T3 1359       C
FIRES-T3 1360              COMMON /CONTROL/ ITITLE(6),IREAD(80),NIN,NOUT,NPUNCH,NUMNP,NELID,N
FIRES-T3 1361             1EL2D,NEL3D,NUMEL,MRAND,NMAT,NFBC1D,NFBC2D,NFBC3D,NDCMAT,NDCTYP
FIRES-T3 1362              DIMENSION AT(1), A(NP,1), MATL(1), XYS(1), T(1), Q(1), S(8,8), LM(
FIRES-T3 1363             1(1), FSTU(8), B(3,8), MMTYPE(1), BAREA(1), THICK(1), X(1), Y(1), Z(
FIRES-T3 1364             21), FCS(2), SI(4), TI(4), XX(4), YY(4), DPSTU(2,4), CJAC(3,3), VOL
FIRES-T3 1365             3UME(1)
FIRES-T3 1366              DATA FCS/-0.57735027,+0.57735027/
FIRES-T3 1367              DATA SI/-1.,1.,1.,-1./
FIRES-T3 1368              DATA TI/-1.,-1.,1.,1./
FIRES-T3 1369       C
FIRES-T3 1370       C
FIRES-T3 1371       C      INITIALIZE THE SYSTEMS CONDUCTIVITY MATRIX TO 0.0
FIRES-T3 1372       C      AND THE SYSTEMS HEAT CAPACITY MATRIX TO 0.0
FIRES-T3 1373       C
FIRES-T3 1374              DO 10 I=1,NUMNP
FIRES-T3 1375           10 Q(I)=0.
FIRES-T3 1376              MB=MRAND*NUMNP
FIRES-T3 1377              DO 20 I=1,MB
FIRES-T3 1378           20 A(I)=0.0
FIRES-T3 1379       C
FIRES-T3 1380       C
FIRES-T3 1381       C      O N E - D I M E N S I O N A L   E L E M E N T S
FIRES-T3 1382       C
FIRES-T3 1383       C
FIRES-T3 1384              IF (NELID.EQ.0) GO TO 5
```

```
FIRES-T3 1385          NLM=0
FIRES-T3 1386          DO 40 N=1,NEL1D
FIRES-T3 1387          NLM=NLM+2
FIRES-T3 1388          DO 30 I=1,2
FIRES-T3 1389          DO 30 J=1,2
FIRES-T3 1390       30 S(I,J)=0.0
FIRES-T3 1391          II=LM(NLM-1)
FIRES-T3 1392          KK=LM(NLM)
FIRES-T3 1393          AA=X(II)-X(KK)
FIRES-T3 1394          BB=Y(II)-Y(KK)
FIRES-T3 1395          CC=Z(II)-Z(KK)
FIRES-T3 1396          XL=SQRT(AA*AA+BB*BB+CC*CC)
FIRES-T3 1397          AT(N)=0.5*(T(II)+T(KK))
FIRES-T3 1398          TEMP=AT(N)
FIRES-T3 1399          MS=MMTYPE(N)
FIRES-T3 1400          MS=(MS-1)*6
FIRES-T3 1401          J=MATL(MS+1)
FIRES-T3 1402          K=MATL(MS+2)
FIRES-T3 1403          COND=VMAT(K,XYS(J),XYS(J+K),XYS(J+K+K),TEMP,10H    K(T)    )
FIRES-T3 1404          J=MATL(MS+3)
FIRES-T3 1405          K=MATL(MS+4)
FIRES-T3 1406          SPHT=VMAT(K,XYS(J),XYS(J+K),XYS(J+K+K),TEMP,10H    CP(T)   )
FIRES-T3 1407          J=MATL(MS+5)
FIRES-T3 1408          K=MATL(MS+6)
FIRES-T3 1409          DENS=VMAT(K,XYS(J),XYS(J+K),XYS(J+K+K),TEMP,10H     D(T)   )
FIRES-T3 1410          S(1,1)=BAREA(N)*COND/XL
FIRES-T3 1411          S(1,2)=-S(1,1)
FIRES-T3 1412          S(2,1)=S(1,2)
FIRES-T3 1413          S(2,2)=S(1,1)
FIRES-T3 1414          QSTORE=SPHT*DENS*XL*BAREA(N)/2.
FIRES-T3 1415    C
FIRES-T3 1416    C     ADD ELEMENT CONDUCTIVITY AND CAPACITY TO SYSTEM MATRICES
FIRES-T3 1417    C
FIRES-T3 1418          Q(II)=Q(II)+QSTORE
FIRES-T3 1419          Q(KK)=Q(KK)+QSTORE
FIRES-T3 1420          A(II,1)=A(II,1)+S(1,1)
FIRES-T3 1421          JJ=KK-II+1
FIRES-T3 1422          IF (JJ.GT.0) A(II,JJ)=A(II,JJ)+S(1,2)
FIRES-T3 1423          JJ=II-KK+1
FIRES-T3 1424          IF (JJ.GT.0) A(KK,JJ)=A(KK,JJ)+S(1,2)
FIRES-T3 1425          A(KK,1)=A(KK,1)+S(2,2)
FIRES-T3 1426       40 CONTINUE
FIRES-T3 1427    C
FIRES-T3 1428    C
FIRES-T3 1429    C     T W O - D I M E N S I O N A L   E L E M E N T S
FIRES-T3 1430    C
FIRES-T3 1431    C
FIRES-T3 1432       50 IF (NEL2D.EQ.0) GO TO 270
FIRES-T3 1433          NLM=2*NEL1D
FIRES-T3 1434          DO 260 N=1,NEL2D
FIRES-T3 1435          N1=N+NEL1D
FIRES-T3 1436          NLM=NLM+4
FIRES-T3 1437          DO 60 I=1,4
FIRES-T3 1438          DO 60 J=1,4
FIRES-T3 1439       60 S(I,J)=0.0
FIRES-T3 1440          LL1=LM(NLM-3)
FIRES-T3 1441          LL2=LM(NLM-2)
FIRES-T3 1442          LL3=LM(NLM-1)
FIRES-T3 1443          LL4=LM(NLM)
FIRES-T3 1444          AT(N1)=0.25*(T(LL1)+T(LL2)+T(LL3)+T(LL4))
FIRES-T3 1445    C
FIRES-T3 1446    C     TEST FOR ORIENTATION OF 2-D ELEMENT  -  X-Y, X-Z, OR Y-Z PLANE
```

```
FIRES-T3 1447          C
FIRES-T3 1448                JO=LM(NLM-3)
FIRES-T3 1449                ZZZ=Z(JO)
FIRES-T3 1450                DO 70 I=1,3
FIRES-T3 1451                J=LM(NLM-3+I)
FIRES-T3 1452                DZ=ABS(ZZZ-Z(J))
FIRES-T3 1453                IF (DZ.GT.0.00001) GO TO 90
FIRES-T3 1454             70 CONTINUE
FIRES-T3 1455                DO 80 I=1,4
FIRES-T3 1456                J=LM(NLM-4+I)
FIRES-T3 1457                XX(I)=X(J)
FIRES-T3 1458             80 YY(I)=Y(J)
FIRES-T3 1459                GO TO 160
FIRES-T3 1460             90 YYY=Y(JO)
FIRES-T3 1461                DO 100 I=1,3
FIRES-T3 1462                J=LM(NLM-3+I)
FIRES-T3 1463                DY=ABS(YYY-Y(J))
FIRES-T3 1464                IF (DY.GT.0.00001) GO TO 120
FIRES-T3 1465            100 CONTINUE
FIRES-T3 1466                DO 110 I=1,4
FIRES-T3 1467                J=LM(NLM-4+I)
FIRES-T3 1468                XX(I)=X(J)
FIRES-T3 1469            110 YY(I)=Z(J)
FIRES-T3 1470                GO TO 160
FIRES-T3 1471            120 XXX=X(JO)
FIRES-T3 1472                DO 130 I=1,3
FIRES-T3 1473                J=LM(NLM-3+I)
FIRES-T3 1474                DX=ABS(XXX-X(J))
FIRES-T3 1475                IF (DX.GT.0.00001) GO TO 150
FIRES-T3 1476            130 CONTINUE
FIRES-T3 1477                DO 140 I=1,4
FIRES-T3 1478                J=LM(NLM-4+I)
FIRES-T3 1479                XX(I)=Y(J)
FIRES-T3 1480            140 YY(I)=Z(J)
FIRES-T3 1481                GO TO 160
FIRES-T3 1482            150 WRITE (NOUT,370) N
FIRES-T3 1483                STOP
FIRES-T3 1484            160 VOL=0.0
FIRES-T3 1485                DO 220 III=1,2
FIRES-T3 1486                DO 220 JJJ=1,2
FIRES-T3 1487                SE=POS(III)
FIRES-T3 1488                TE=POS(JJJ)
FIRES-T3 1489                DO 170 I=1,4
FIRES-T3 1490                PSTU(I)=(1.+SE*SI(I))*(1.+TE*TI(I))/4.
FIRES-T3 1491                DPSTU(1,I)=SI(I)*(1.+TE*TI(I))/4.
FIRES-T3 1492            170 DPSTU(2,I)=TI(I)*(1.+SE*SI(I))/4.
FIRES-T3 1493                DO 180 I=1,2
FIRES-T3 1494                CJAC(I,1)=0.0
FIRES-T3 1495                CJAC(I,2)=0.0
FIRES-T3 1496                DO 180 J=1,4
FIRES-T3 1497                CJAC(I,1)=CJAC(I,1)+DPSTU(I,J)*XX(J)
FIRES-T3 1498            180 CJAC(I,2)=CJAC(I,2)+DPSTU(I,J)*YY(J)
FIRES-T3 1499                CALL INVMAT (CJAC,DETJ,2)
FIRES-T3 1500                VOL=VOL+DETJ*THICK(N)
FIRES-T3 1501                DO 190 I=1,2
FIRES-T3 1502                DO 190 J=1,4
FIRES-T3 1503                B(I,J)=0.0
FIRES-T3 1504                DO 190 K=1,2
FIRES-T3 1505            190 B(I,J)=B(I,J)+CJAC(I,K)*DPSTU(K,J)
FIRES-T3 1506                ATT=0.
FIRES-T3 1507                DO 200 I=1,4
FIRES-T3 1508                L=LM(NLM-4+I)
```

```
FIRES-T3 1509          200 ATT=ATT+PSTU(I)*T(L)
FIRES-T3 1510              TEMP=ATT
FIRES-T3 1511              MS=MMTYPE(N1)
FIRES-T3 1512              MS=(MS-1)*6
FIRES-T3 1513              J=MATL(MS+1)
FIRES-T3 1514              K=MATL(MS+2)
FIRES-T3 1515              COND=VMAT(K,XYS(J),XYS(J+K),XYS(J+K+K),TEMP,10H    K(T)    )
FIRES-T3 1516              J=MATL(MS+3)
FIRES-T3 1517              K=MATL(MS+4)
FIRES-T3 1518              SPHT=VMAT(K,XYS(J),XYS(J+K),XYS(J+K+K),TEMP,10H    CP(T)   )
FIRES-T3 1519              J=MATL(MS+5)
FIRES-T3 1520              K=MATL(MS+6)
FIRES-T3 1521              DENS=VMAT(K,XYS(J),XYS(J+K),XYS(J+K+K),TEMP,10H     D(T)   )
FIRES-T3 1522              DETCON=DETJ*COND*THICK(N)
FIRES-T3 1523              DO 210 I=1,4
FIRES-T3 1524              DO 210 J=1,4
FIRES-T3 1525              DO 210 K=1,2
FIRES-T3 1526          210 S(I,J)=S(I,J)+DETCON*B(K,I)*B(K,J)
FIRES-T3 1527          220 CONTINUE
FIRES-T3 1528              QSTORE=DENS*SPHT*VOL/4.
FIRES-T3 1529        C
FIRES-T3 1530        C     ADD ELEMENT CAPACITY MATRIX TO SYSTEM CAPACITY MATRIX
FIRES-T3 1531        C
FIRES-T3 1532              DO 230 L=1,4
FIRES-T3 1533              I=LM(NLM-4+L)
FIRES-T3 1534          230 Q(I)=Q(I)+QSTORE
FIRES-T3 1535        C
FIRES-T3 1536        C     ADD ELEMENT CONDUCTIVITY TO SYSTEM CONDUCTIVITY MATRIX
FIRES-T3 1537        C
FIRES-T3 1538              DO 250 L=1,4
FIRES-T3 1539              I=LM(NLM-4+L)
FIRES-T3 1540              DO 250 M=1,4
FIRES-T3 1541              J=LM(NLM-4+M)-I+1
FIRES-T3 1542              IF (J) 250,250,240
FIRES-T3 1543          240 A(I,J)=A(I,J)+S(L,M)
FIRES-T3 1544          250 CONTINUE
FIRES-T3 1545          260 CONTINUE
FIRES-T3 1546        C
FIRES-T3 1547        C
FIRES-T3 1548        C     T H R E E - D I M E N S I O N A L   E L E M E N T S
FIRES-T3 1549        C
FIRES-T3 1550        C
FIRES-T3 1551          270 IF (NEL3D.EQ.0) GO TO 360
FIRES-T3 1552              REWIND 6
FIRES-T3 1553              NLM=2*NEL1D+4*NEL2D
FIRES-T3 1554              DO 350 N=1,NEL3D
FIRES-T3 1555              N1=N+NEL1D+NEL2D
FIRES-T3 1556              NLM=NLM+8
FIRES-T3 1557              DO 280 I=1,8
FIRES-T3 1558              DO 280 J=1,8
FIRES-T3 1559          280 S(I,J)=0.0
FIRES-T3 1560              LL1=LM(NLM-7)
FIRES-T3 1561              LL2=LM(NLM-6)
FIRES-T3 1562              LL3=LM(NLM-5)
FIRES-T3 1563              LL4=LM(NLM-4)
FIRES-T3 1564              LL5=LM(NLM-3)
FIRES-T3 1565              LL6=LM(NLM-2)
FIRES-T3 1566              LL7=LM(NLM-1)
FIRES-T3 1567              LL8=LM(NLM)
FIRES-T3 1568              AT(N1)=.125*(T(LL1)+T(LL2)+T(LL3)+T(LL4)+T(LL5)+T(LL6)+T(LL7)+T(LL
FIRES-T3 1569             18))
FIRES-T3 1570              DO 310 III=1,2
```

```
FIRES-T3 1571          DO 310 JJJ=1,2
FIRES-T3 1572          DO 310 KKK=1,2
FIRES-T3 1573          READ (6) DETJ,(PSTU(I),I=1,8),((B(I,J),J=1,8),I=1,3)
FIRES-T3 1574          ATT=0.
FIRES-T3 1575          DO 290 I=1,8
FIRES-T3 1576          L=LM(NLM-8+I)
FIRES-T3 1577      290 ATT=ATT+PSTU(I)*T(L)
FIRES-T3 1578          TEMP=ATT
FIRES-T3 1579          MS=MATYPE(N1)
FIRES-T3 1580          MS=(MS-1)*6
FIRES-T3 1581          J=MATL(MS+1)
FIRES-T3 1582          K=MATL(MS+2)
FIRES-T3 1583          COND=VMAT(K,XYS(J),XYS(J+K),XYS(J+K+K),TEMP,10H   K(T)   )
FIRES-T3 1584          J=MATL(MS+3)
FIRES-T3 1585          K=MATL(MS+4)
FIRES-T3 1586          SPHT=VMAT(K,XYS(J),XYS(J+K),XYS(J+K+K),TEMP,10H   CP(T)  )
FIRES-T3 1587          J=MATL(MS+5)
FIRES-T3 1588          K=MATL(MS+6)
FIRES-T3 1589          DENS=VMAT(K,XYS(J),XYS(J+K),XYS(J+K+K),TEMP,10H    D(T)  )
FIRES-T3 1590          DETCON=DETJ*COND
FIRES-T3 1591          DO 300 I=1,8
FIRES-T3 1592          DO 300 J=1,8
FIRES-T3 1593          DO 300 K=1,3
FIRES-T3 1594      300 S(I,J)=S(I,J)+DETCON*B(K,I)*B(K,J)
FIRES-T3 1595      310 CONTINUE
FIRES-T3 1596          VOL=VOLUME(N)
FIRES-T3 1597          QSTORE=DENS*SPHT*VOL/8.
FIRES-T3 1598    C
FIRES-T3 1599    C     ADD ELEMENT CAPACITY MATRIX TO SYSTEM CAPACITY MATRIX
FIRES-T3 1600    C
FIRES-T3 1601          DO 320 L=1,8
FIRES-T3 1602          I=LM(NLM-8+L)
FIRES-T3 1603      320 Q(I)=Q(I)+QSTORE
FIRES-T3 1604    C
FIRES-T3 1605    C     ADD ELEMENT CONDUCTIVITY TO THE SYSTEMS CONDUCTIVITY MATRIX - A
FIRES-T3 1606    C
FIRES-T3 1607          DO 340 L=1,8
FIRES-T3 1608          I=LM(NLM-8+L)
FIRES-T3 1609          DO 340 M=1,8
FIRES-T3 1610          J=LM(NLM-8+M)-I+1
FIRES-T3 1611          IF (J) 340,340,330
FIRES-T3 1612      330 A(I,J)=A(I,J)+S(L,M)
FIRES-T3 1613      340 CONTINUE
FIRES-T3 1614      350 CONTINUE
FIRES-T3 1615    C
FIRES-T3 1616      360 RETURN
FIRES-T3 1617    C
FIRES-T3 1618    C
FIRES-T3 1619      370 FORMAT (//31H STOP-ERROR IN 2-D ELEMENT NO. ,I5,/30H NOT IN X-Y, X
FIRES-T3 1620         1-Z, OR Y-Z PLANE)
FIRES-T3 1621          END
```

```
FIRES-T3 1622          SUBROUTINE HATEMP (ITOF,D,KODE,P,A,ND,MAIN,FT,J)
FIRES-T3 1623    C
FIRES-T3 1624    C
FIRES-T3 1625    C     SUBROUTINE XHATEMP APPLIES THE FIXED TEMPERATURE OR FLOW
FIRES-T3 1626    C     BOUNDARY CONDITIONS
FIRES-T3 1627    C
```

```
FIRES-T3 1628          C
FIRES-T3 1629                COMMON /CONTROL/ ITITLE(6),IREAD(80),NIN,NOUT,NPUNCH,NUMNP,NELIC,N
FIRES-T3 1630               1EL2D,NEL3D,NUMEL,MBAND,NMAT,NFBC1D,NFBC2D,NFBC3D,NBCMAT,NBCTYP
FIRES-T3 1631                DIMENSION D(1), KODE(1), B(1), A(NP,1), FT(1), J(1)
FIRES-T3 1632                IF (MAIN.NE.1) GO TO 30
FIRES-T3 1633          C
FIRES-T3 1634          C     INITIALIZE TEMPERATURE AND FLOW B.C. TO 0.0
FIRES-T3 1635          C
FIRES-T3 1636                DO 10 I=1,NUMNP
FIRES-T3 1637             10 D(I)=0.0
FIRES-T3 1638          C
FIRES-T3 1639                IF (ITOF.EQ.0) GO TO 30
FIRES-T3 1640          C
FIRES-T3 1641                WRITE (NOUT,100)
FIRES-T3 1642          C
FIRES-T3 1643          C     INPUT NON-ZERO TEMPERATURE AND FLOW B.C.
FIRES-T3 1644          C
FIRES-T3 1645                READ (NIN,110) (J(I),FT(I),I=1,ITOF)
FIRES-T3 1646                WRITE (NOUT,120)
FIRES-T3 1647          C
FIRES-T3 1648          C     OUTPUT THE NON-ZERO BOUNDARY CONDITIONS AND STORE IN MATRIX D
FIRES-T3 1649          C
FIRES-T3 1650                DO 20 I=1,ITOF
FIRES-T3 1651                II=J(I)
FIRES-T3 1652                D(II)=FT(I)
FIRES-T3 1653                JJ=KODE(II)
FIRES-T3 1654                WRITE (NOUT,130) II,JJ,D(II)
FIRES-T3 1655             20 CONTINUE
FIRES-T3 1656          C
FIRES-T3 1657             30 DO 90 N=1,NUMNP
FIRES-T3 1658          C
FIRES-T3 1659          C     MODIFY MATRIX B FOR FLOW B.C.
FIRES-T3 1660          C
FIRES-T3 1661                B(N)=B(N)+D(N)
FIRES-T3 1662                IF (KODE(N).EQ.4HFLOW) GO TO 90
FIRES-T3 1663          C
FIRES-T3 1664          C     MODIFY A AND B MATRIX FOR TEMPERATURE B.C.
FIRES-T3 1665          C
FIRES-T3 1666                DO 80 M=2,MBAND
FIRES-T3 1667                K=N-M+1
FIRES-T3 1668                IF (K) 50,50,40
FIRES-T3 1669             40 B(K)=B(K)-A(K,M)*D(N)
FIRES-T3 1670                A(K,M)=0.0
FIRES-T3 1671             50 L=N+M-1
FIRES-T3 1672                IF (NUMNP-L) 70,60,60
FIRES-T3 1673             60 B(L)=B(L)-A(N,M)*D(N)
FIRES-T3 1674             70 A(N,M)=0.0
FIRES-T3 1675             80 CONTINUE
FIRES-T3 1676                A(N,1)=1.0
FIRES-T3 1677                B(N)=C(N)
FIRES-T3 1678             90 CONTINUE
FIRES-T3 1679          C
FIRES-T3 1680                RETURN
FIRES-T3 1681          C
FIRES-T3 1682          C
FIRES-T3 1683            100 FORMAT (//5X,31HVALUES OF TEMPERATURES OR FLOWS/10X,32HFOR NON-ZER
FIRES-T3 1684               10 BOUNDARY CONDITIONS)
FIRES-T3 1685            110 FORMAT (5(I5,F10.2))
FIRES-T3 1686            120 FORMAT (/,8H    NODE,7X,4HTYPE,10X,5HVALUE)
FIRES-T3 1687            130 FORMAT (I8,7X,A4,5X,F10.2)
FIRES-T3 1688                END
```

```
FIRES-T3 1689          SUBROUTINE MSYM (KKK,B,MA,A,NP)
FIRES-T3 1690      C
FIRES-T3 1691      C
FIRES-T3 1692      C   SUBROUTINE *MSYM* IS AN EQUATION SOLVER
FIRES-T3 1693      C   BASED ON A MODIFIED SYMSOL - VARIABLE BANDWIDTH WITH ZEROS IN BAND
FIRES-T3 1694      C
FIRES-T3 1695      C
FIRES-T3 1696          COMMON /CONTROL/ ITITLE(6),IREAD(80),NIN,NOUT,NPUNCH,NUMNP,NEL1D,N
FIRES-T3 1697         1EL2D,NEL3D,NUMEL,MBAND,NMAT,NFBC1D,NFBC2D,NFBC3D,NBCMAT,NBCTYP
FIRES-T3 1698          DIMENSION B(1), MA(1), A(NP,1)
FIRES-T3 1699      C
FIRES-T3 1700          NEQ=NUMNP
FIRES-T3 1701      C
FIRES-T3 1702          GO TO (10,70), KKK
FIRES-T3 1703      C
FIRES-T3 1704      C   ***************************************************************
FIRES-T3 1705      C
FIRES-T3 1706      C   REDUCE MATRIX..... A
FIRES-T3 1707      C
FIRES-T3 1708      C   ***************************************************************
FIRES-T3 1709      C
FIRES-T3 1710       10 NEQQ=NEQ-1
FIRES-T3 1711          DO 60 N=1,NEQQ
FIRES-T3 1712      C
FIRES-T3 1713          M=MBAND
FIRES-T3 1714          DO 20 I=2,MBAND
FIRES-T3 1715          IF (A(N,M).NE.0.) GO TO 30
FIRES-T3 1716       20 M=M-1
FIRES-T3 1717       30 MA(N)=M
FIRES-T3 1718      C
FIRES-T3 1719          I=N
FIRES-T3 1720          DO 50 L=2,M
FIRES-T3 1721          I=I+1
FIRES-T3 1722          CC=A(N,L)/A(N,1)
FIRES-T3 1723          IF (CC.EQ.0.) GO TO 50
FIRES-T3 1724          J=0
FIRES-T3 1725          DO 40 K=L,M
FIRES-T3 1726          J=J+1
FIRES-T3 1727       40 A(I,J)=A(I,J)-CC*A(N,K)
FIRES-T3 1728          A(N,L)=CC
FIRES-T3 1729       50 CONTINUE
FIRES-T3 1730       60 CONTINUE
FIRES-T3 1731          GO TO 120
FIRES-T3 1732      C
FIRES-T3 1733      C   ***************************************************************
FIRES-T3 1734      C
FIRES-T3 1735      C   REDUCE VECTOR..... B AND BACKSUBSTITUTE
FIRES-T3 1736      C
FIRES-T3 1737      C   ***************************************************************
FIRES-T3 1738      C
FIRES-T3 1739       70 DO 90 N=1,NEQQ
FIRES-T3 1740          CC=B(N)
FIRES-T3 1741          IF (CC.EQ.0.) GO TO 90
FIRES-T3 1742          M=MA(N)
FIRES-T3 1743          I=N
FIRES-T3 1744          DO 80 L=2,M
FIRES-T3 1745          I=I+1
FIRES-T3 1746       80 B(I)=B(I)-CC*A(N,L)
FIRES-T3 1747          B(N)=CC/A(N,1)
FIRES-T3 1748       90 CONTINUE
FIRES-T3 1749          B(NEQ)=B(NEQ)/A(NEQ,1)
FIRES-T3 1750      C
```

```
FIRES-T3 1751          NN=NEQ
FIRES-T3 1752          DO 110 K=1,NEQO
FIRES-T3 1753          NN=NN-1
FIRES-T3 1754          M=MA(NN)
FIRES-T3 1755          I=NN
FIRES-T3 1756          DO 100 K=2,M
FIRES-T3 1757          I=I+1
FIRES-T3 1758      100 B(NN)=B(NN)-A(NN,K)*B(I)
FIRES-T3 1759      110 CONTINUE
FIRES-T3 1760      120 RETURN
FIRES-T3 1761          END
```

```
FIRES-T3 1762          SUBROUTINE PROUT (K,T,AT,LM,T1,B,MAIN,NCON,I1)
FIRES-T3 1763      C
FIRES-T3 1764      C
FIRES-T3 1765      C   SUBROUTINE *PROUT* PRINTS TEMPERATURE DISTRIBUTIONS
FIRES-T3 1766      C     ( BOTH NODAL AND ELEMENT )
FIRES-T3 1767      C
FIRES-T3 1768      C
FIRES-T3 1769          COMMON /CONTROL/ ITITLE(6),IREAD(80),NIN,NOUT,NPUNCH,NUMNP,NEL1D,N
FIRES-T3 1770         1EL2D,NEL3D,NUMEL,MBAND,NMAT,NFBC1D,NFBC2D,NFBC3D,NBCMAT,NBCTYP
FIRES-T3 1771          DIMENSION T(1), AT(1), T1(1), B(1), LM(1)
FIRES-T3 1772      C
FIRES-T3 1773      C
FIRES-T3 1774          GO TO (10,20,30,40), K
FIRES-T3 1775      C
FIRES-T3 1776       10 CONTINUE
FIRES-T3 1777      C
FIRES-T3 1778      C   DEBUGGING OUTPUT FOR TEMPERATURES AT BEGINNING OF SYSTEM CYCLE
FIRES-T3 1779      C
FIRES-T3 1780          WRITE (NOUT,140) MAIN
FIRES-T3 1781          WRITE (NOUT,230) (N,T(N),N=1,NUMNP)
FIRES-T3 1782          RETURN
FIRES-T3 1783      C
FIRES-T3 1784       20 CONTINUE
FIRES-T3 1785      C
FIRES-T3 1786      C   DEBUGGING OUTPUT TEMPERATURES FOR FIRE B.C. CYCLE
FIRES-T3 1787      C
FIRES-T3 1788          WRITE (NOUT,150) NCON
FIRES-T3 1789          WRITE (NOUT,230) (N,B(N),N=1,NUMNP)
FIRES-T3 1790          RETURN
FIRES-T3 1791      C
FIRES-T3 1792       30 CONTINUE
FIRES-T3 1793      C
FIRES-T3 1794      C   OUTPUT DATA FOR DUMP WHEN PROBLEM HAS NOT CONVERGED AFTER
FIRES-T3 1795      C   PERMISSIBLE NUMBER OF CYCLES
FIRES-T3 1796      C
FIRES-T3 1797          WRITE (NOUT,160)
FIRES-T3 1798          WRITE (NOUT,170) MAIN,NCON
FIRES-T3 1799          WRITE (NOUT,180)
FIRES-T3 1800          WRITE (NOUT,230) (N,T1(N),N=1,NUMNP)
FIRES-T3 1801          WRITE (NOUT,190)
FIRES-T3 1802          WRITE (NOUT,230) (N,T(N),N=1,NUMNP)
FIRES-T3 1803          WRITE (NOUT,200)
FIRES-T3 1804          WRITE (NOUT,230) (N,B(N),N=1,NUMNP)
FIRES-T3 1805          STOP
FIRES-T3 1806      C
FIRES-T3 1807       40 CONTINUE
```

```
FIRES-T3 1808          C
FIRES-T3 1809          C     OUTPUT OF RESULTS FOR A TIME STEP
FIRES-T3 1810          C
FIRES-T3 1811                IF (II.EQ.1.OR.II.EQ.3) 50,60
FIRES-T3 1812             50 CONTINUE
FIRES-T3 1813          C
FIRES-T3 1814          C     OUTPUT NODAL POINT TEMPERTURES
FIRES-T3 1815          C
FIRES-T3 1816                WRITE (NOUT,210)
FIRES-T3 1817                WRITE (NOUT,220)
FIRES-T3 1818                WRITE (NOUT,230) (N,T(N),N=1,NUMNP)
FIRES-T3 1819             60 CONTINUE
FIRES-T3 1820                IF (II.EQ.2.OR.II.EQ.3) 70,130
FIRES-T3 1821          C
FIRES-T3 1822          C     OUTPUT ELEMENT TEMPERATURES
FIRES-T3 1823          C
FIRES-T3 1824          C     ONE-DIMENSIONAL ELEMENTS
FIRES-T3 1825          C
FIRES-T3 1826             70 IF (NEL1D.EQ.0) GO TO 90
FIRES-T3 1827                NLM=0
FIRES-T3 1828                WRITE (NOUT,240)
FIRES-T3 1829                WRITE (NOUT,220)
FIRES-T3 1830                DO 80 N=1,NEL1D
FIRES-T3 1831                NLM=NLM+2
FIRES-T3 1832                LL1=LM(NLM-1)
FIRES-T3 1833                LL2=LM(NLM)
FIRES-T3 1834             80 AT(N)=0.5*(T(LL1)+T(LL2))
FIRES-T3 1835                WRITE (NOUT,230) (N,AT(N),N=1,NEL1D)
FIRES-T3 1836          C
FIRES-T3 1837          C     TWO-DIMENSIONAL ELEMENTS
FIRES-T3 1838          C
FIRES-T3 1839             90 IF (NEL2D.EQ.0) GO TO 110
FIRES-T3 1840                NLM=2*NEL1D
FIRES-T3 1841                WRITE (NOUT,250)
FIRES-T3 1842                WRITE (NOUT,220)
FIRES-T3 1843                DO 100 N=1,NEL2D
FIRES-T3 1844                NLM=NLM+4
FIRES-T3 1845                LL1=LM(NLM-3)
FIRES-T3 1846                LL2=LM(NLM-2)
FIRES-T3 1847                LL3=LM(NLM-1)
FIRES-T3 1848                LL4=LM(NLM)
FIRES-T3 1849            100 AT(N+NEL1D)=0.25*(T(LL1)+T(LL2)+T(LL3)+T(LL4))
FIRES-T3 1850                WRITE (NOUT,230) (N,AT(N+NEL1D),N=1,NEL2D)
FIRES-T3 1851          C
FIRES-T3 1852          C     THREE-DIMENSIONAL ELEMENTS
FIRES-T3 1853          C
FIRES-T3 1854            110 IF (NEL3D.EQ.0) GO TO 130
FIRES-T3 1855                NLM=2*NEL1D+4*NEL2D
FIRES-T3 1856                WRITE (NOUT,260)
FIRES-T3 1857                WRITE (NOUT,220)
FIRES-T3 1858                DO 120 N=1,NEL3D
FIRES-T3 1859                NLM=NLM+8
FIRES-T3 1860                LL1=LM(NLM-7)
FIRES-T3 1861                LL2=LM(NLM-6)
FIRES-T3 1862                LL3=LM(NLM-5)
FIRES-T3 1863                LL4=LM(NLM-4)
FIRES-T3 1864                LL5=LM(NLM-3)
FIRES-T3 1865                LL6=LM(NLM-2)
FIRES-T3 1866                LL7=LM(NLM-1)
FIRES-T3 1867                LL8=LM(NLM)
FIRES-T3 1868                NI=N+NEL1D+NEL2D
FIRES-T3 1869            120 AT(NI)=0.125*(T(LL1)+T(LL2)+T(LL3)+T(LL4)+T(LL5)+T(LL6)+T(LL7)+T(L
```

```
FIRES-T3 1870          1L9))
FIRES-T3 1871           N2=NEL1D+NEL2D
FIRES-T3 1872           WRITE (NOUT,230) (N,AT(N+N2),N=1,NEL3D)
FIRES-T3 1873      C
FIRES-T3 1874        130 RETURN
FIRES-T3 1875      C
FIRES-T3 1876      C
FIRES-T3 1877        140 FORMAT (/,62H  NODAL POINT TEMPERATURES AT BEGINNING OF SYSTEM CYC
FIRES-T3 1878          1LE NUMBER,I6/)
FIRES-T3 1879        150 FORMAT (/,40H  NODAL POINT TEMPERATURE FOR B.C. CYCLE,I5/)
FIRES-T3 1880        160 FORMAT (//,20H  PROGRAM TERMINATED,/,59H  CONVERGENCE NOT OBTAINED
FIRES-T3 1881          1 IN REQUIRED NUMBER OF ITERATIONS)
FIRES-T3 1882        170 FORMAT (/,15H  SYSTEM CYCLE ,I5,16H AND B.C. CYCLE ,I5)
FIRES-T3 1883        180 FORMAT (//,33H  SYSTEM NODAL POINT TEMPERATURES)
FIRES-T3 1884        190 FORMAT (//,53H  NODAL POINT TEMPERATURES AT BEGINNING OF B.C. CYCL
FIRES-T3 1885          1E)
FIRES-T3 1886        200 FORMAT (//,47H  NODAL POINT TEMPERATURES AT END OF B.C. CYCLE)
FIRES-T3 1887        210 FORMAT (//54H ------------ NODAL POINT TEMPERATURES --------------
FIRES-T3 1888          1-/)
FIRES-T3 1889        220 FORMAT (/1X,4(15H     N     TEMP. ))
FIRES-T3 1890        230 FORMAT (4(I6,F9.2))
FIRES-T3 1891        240 FORMAT (//,57H -------------- TEMPERATURE OF 1-D ELEMENTS --------
FIRES-T3 1892          1-----/)
FIRES-T3 1893        250 FORMAT (//,57H -------------- TEMPERATURE OF 2-D ELEMENTS --------
FIRES-T3 1894          1-----/)
FIRES-T3 1895        260 FORMAT (//,57H -------------- TEMPERATURE OF 3-D ELEMENTS --------
FIRES-T3 1896          1-----/)
FIRES-T3 1897           END
```

```
FIRES-T3 1898           SUBROUTINE PUOUT (I1,I2,T,AT,X,Y,Z,TIME,IP1,IP2,LM,JP)
FIRES-T3 1899      C
FIRES-T3 1900      C
FIRES-T3 1901      C    SUBROUTINE *PUOUT* PUNCHES THE TEMPERATURE DISTRIBUTIONS THAT
FIRES-T3 1902      C    RESULT FROM THE ANALYSIS DONE IN THE PROGRAM.
FIRES-T3 1903      C       JP - IDENTIFIER TO BE USED IN LAST 8 COLUMNS
FIRES-T3 1904      C       IP1 - COUNTER FOR NODAL DATA CARDS PUNCHED
FIRES-T3 1905      C       IP2 - COUNTER FOR ELEMENT DATA CARDS PUNCHED
FIRES-T3 1906      C
FIRES-T3 1907      C
FIRES-T3 1908           COMMON /CONTROL/ ITITLE(6),IREAD(80),NIN,NOUT,NPUNCH,NUMNF,NEL1D,N
FIRES-T3 1909          1EL2D,NEL3D,NUMEL,MBAND,NMAT,NFBC1D,NFBC2D,NFBC3D,NBCMAT,NBCTYP
FIRES-T3 1910           DIMENSION T(1), AT(1), X(1), Y(1), Z(1), LM(1)
FIRES-T3 1911           INTEGER ELEM
FIRES-T3 1912           NP=NELACH
FIRES-T3 1913      C
FIRES-T3 1914           IF (I2.EQ.1.OR.I2.EQ.3) 10,100
FIRES-T3 1915      C
FIRES-T3 1916      C    PUNCHING NODAL DATA
FIRES-T3 1917      C
FIRES-T3 1918        10 WRITE (NOUT,240)
FIRES-T3 1919           NODE=4HNODE
FIRES-T3 1920           IF (JP.EQ.3H   ) GO TO 20
FIRES-T3 1921           ENCODE (4,250,NODE) JP
FIRES-T3 1922        20 CONTINUE
FIRES-T3 1923           IF (IP1.NE.0) GO TO 60
FIRES-T3 1924      C
FIRES-T3 1925      C    NODAL COORDINATES PUNCHED THE FIRST TIME TEMPERATURE DATA IS
FIRES-T3 1926      C    REQUESTED
```

```
FIRES-T3 1927          C
FIRES-T3 1928                IP1=IP1+1
FIRES-T3 1929                WRITE (NP,260) ITITLE,NODE,IP1
FIRES-T3 1930                IP1=IP1+1
FIRES-T3 1931                WRITE (NP,270) NODE,IP1
FIRES-T3 1932                IP1=IP1+1
FIRES-T3 1933                WRITE (NP,280) NODE,IP1
FIRES-T3 1934                N1=1
FIRES-T3 1935             30 N2=N1+2
FIRES-T3 1936                IP1=IP1+1
FIRES-T3 1937                IF (NUMNP-N2) 50,40,40
FIRES-T3 1938             40 WRITE (NP,290) (I,X(I),Y(I),Z(I),I=N1,N2),NODE,IP1
FIRES-T3 1939                IF (N2.EQ.NUMNP) GO TO 60
FIRES-T3 1940                N1=N2+1
FIRES-T3 1941                GO TO 30
FIRES-T3 1942             50 N2=NUMNP
FIRES-T3 1943                N=NUMNP+1-N1
FIRES-T3 1944                M=72-N*22
FIRES-T3 1945                ENCODE (30,300,L) N,M
FIRES-T3 1946                WRITE (NP,L) (I,X(I),Y(I),Z(I),I=N1,N2),NODE,IP1
FIRES-T3 1947          C
FIRES-T3 1948          C     PUNCHING NODAL POINT TEMPERATURES
FIRES-T3 1949          C
FIRES-T3 1950             60 IP1=IP1+1
FIRES-T3 1951                WRITE (NP,310) TIME,NUMNP,NODE,IP1
FIRES-T3 1952                N1=1
FIRES-T3 1953             70 N2=N1+6
FIRES-T3 1954                IP1=IP1+1
FIRES-T3 1955                IF (NUMNP-N2) 90,80,80
FIRES-T3 1956             80 WRITE (NP,320) (I,T(I),I=N1,N2),NODE,IP1
FIRES-T3 1957                IF (N2.EQ.NUMNP) GO TO 100
FIRES-T3 1958                N1=N2+1
FIRES-T3 1959                GO TO 70
FIRES-T3 1960             90 N2=NUMNP
FIRES-T3 1961                N=NUMNP+1-N1
FIRES-T3 1962                M=72-N*10
FIRES-T3 1963                ENCODE (30,330,L) N,M
FIRES-T3 1964                WRITE (NP,L) (I,T(I),I=N1,N2),NODE,IP1
FIRES-T3 1965            100 IF (I2.EQ.2.OR.I2.EQ.3) 110,230
FIRES-T3 1966          C
FIRES-T3 1967          C     PUNCHING ELEMENT DATA
FIRES-T3 1968          C
FIRES-T3 1969            110 WRITE (NOUT,340)
FIRES-T3 1970                IF (IP2.NE.0) GO TO 130
FIRES-T3 1971                ELEM=4HELEM
FIRES-T3 1972                IF (JP.EQ.3H   ) GO TO 120
FIRES-T3 1973                ENCODE (4,350,ELEM) JP
FIRES-T3 1974            120 CONTINUE
FIRES-T3 1975          C
FIRES-T3 1976          C     PUNCHING ELEMENT TEMPERATURES IN ORDER 1-D, 2-D, 3-D.
FIRES-T3 1977          C
FIRES-T3 1978            130 IP2=IP2+1
FIRES-T3 1979                WRITE (NP,360) TIME,NUMEL,ELEM,IP2
FIRES-T3 1980                IF (I1.EQ.2.OR.I1.EQ.3) GO TO 190
FIRES-T3 1981          C
FIRES-T3 1982          C     CALCULATE THE AVERAGE ELEMENT TEMPERATURE
FIRES-T3 1983          C
FIRES-T3 1984                IF (NELID.EQ.0) GO TO 150
FIRES-T3 1985                NLM=0
FIRES-T3 1986                DO 140 N=1,NELID
FIRES-T3 1987                NLM=NLM+2
FIRES-T3 1988                L1=LM(NLM-1)
```

```
FIRES-T3 1989          LL2=LM(NLM)
FIRES-T3 1990      140 AT(N)=0.5*(T(LL1)+T(LL2))
FIRES-T3 1991      150 IF (NEL2D.EQ.0) GO TO 170
FIRES-T3 1992          NLM=2*NEL1D
FIRES-T3 1993          DO 160 N=1,NEL2D
FIRES-T3 1994          NLM=NLM+4
FIRES-T3 1995          LL1=LM(NLM-3)
FIRES-T3 1996          LL2=LM(NLM-2)
FIRES-T3 1997          LL3=LM(NLM-1)
FIRES-T3 1998          LL4=LM(NLM)
FIRES-T3 1999      160 AT(N+NEL1D)=0.25*(T(LL1)+T(LL2)+T(LL3)+T(LL4))
FIRES-T3 2000      170 IF (NEL3D.EQ.0) GO TO 190
FIRES-T3 2001          NLM=2*NEL1D+4*NEL2D
FIRES-T3 2002          DO 180 N=1,NEL3D
FIRES-T3 2003          NLM=NLM+8
FIRES-T3 2004          LL1=LM(NLM-7)
FIRES-T3 2005          LL2=LM(NLM-6)
FIRES-T3 2006          LL3=LM(NLM-5)
FIRES-T3 2007          LL4=LM(NLM-4)
FIRES-T3 2008          LL5=LM(NLM-3)
FIRES-T3 2009          LL6=LM(NLM-2)
FIRES-T3 2010          LL7=LM(NLM-1)
FIRES-T3 2011          LL8=LM(NLM)
FIRES-T3 2012          N1=N+NEL1D+NEL2D
FIRES-T3 2013      180 AT(N1)=.125*(T(LL1)+T(LL2)+T(LL3)+T(LL4)+T(LL5)+T(LL6)+T(LL7)+T(LL
FIRES-T3 2014         18))
FIRES-T3 2015    C
FIRES-T3 2016      190 CONTINUE
FIRES-T3 2017          N1=1
FIRES-T3 2018      200 N2=N1+6
FIRES-T3 2019          IP2=IP2+1
FIRES-T3 2020          IF (NUMEL-N2) 220,210,210
FIRES-T3 2021      210 WRITE (NP,320) (I,AT(I),I=N1,N2),ELEM,IP2
FIRES-T3 2022          IF (N2.EQ.NUMEL) GO TO 230
FIRES-T3 2023          N1=N2+1
FIRES-T3 2024          GO TO 200
FIRES-T3 2025      220 N2=NUMEL
FIRES-T3 2026          N=NUMEL+1-N1
FIRES-T3 2027          M=72-N*10
FIRES-T3 2028          ENCODE (30,330,L) N,M
FIRES-T3 2029          WRITE (NP,L) (I,AT(I),I=N1,N2),ELEM,IP2
FIRES-T3 2030      230 CONTINUE
FIRES-T3 2031    C
FIRES-T3 2032          RETURN
FIRES-T3 2033    C
FIRES-T3 2034    C
FIRES-T3 2035      240 FORMAT (//,37H  . . . . PUNCHING NODAL DATA . . . .)
FIRES-T3 2036      250 FORMAT (1HN,A3)
FIRES-T3 2037      260 FORMAT (7A10,A2,A4,I4)
FIRES-T3 2038      270 FORMAT (52H  NODAL POINT TEMPERATURES FOR SELECT TIME INTERVALS,20
FIRES-T3 2039         1X,A4,I4)
FIRES-T3 2040      280 FORMAT (40H  NODAL POINT COORDINATES - NUMBER,X,Y,Z,32X,A4,I4)
FIRES-T3 2041      290 FORMAT (3(I4,3F6.3),6X,A4,I4)
FIRES-T3 2042      300 FORMAT (1H(,I1,11H(I4,3F6.3),,I2,8HX,A4,I4))
FIRES-T3 2043      310 FORMAT (41H  ----NODAL POINT TEMPERATURES AT TIME = ,F7.3,3H - ,I1
FIRES-T3 2044         1,6H NODES,12X,A4,I4)
FIRES-T3 2045      320 FORMAT (7(I4,F6.1),2X,A4,I4)
FIRES-T3 2046      330 FORMAT (1H(,I1,10H(I4,F5.1),,I2,8HX,A4,I4))
FIRES-T3 2047      340 FORMAT (//,39H  . . . . PUNCHING ELEMENT DATA . . . .)
FIRES-T3 2048      350 FORMAT (1HE,A3)
FIRES-T3 2049      360 FORMAT (37H  ----ELEMENT TEMPERATURES AT TIME = ,F7.3,3H - ,I1,6H
FIRES-T3 2050         1ELEMENTS,12X,A4,I4)
```

```
FIRES-T3 2051                 END


FIRES-T3 2052                 SUBROUTINE FIREMAT (MAT,FXYS,NSTORE)
FIRES-T3 2053           C
FIRES-T3 2054           C
FIRES-T3 2055           C     SUBROUTINE *FIREMAT* INPUTS THE VARIABLES REQUIRED IN THE
FIRES-T3 2056           C     ASSESSMENT OF THE HEAT FLOW ASSOCIATED WITH BOTH LINEAR AND
FIRES-T3 2057           C     NON-LINEAR FIRE BOUNDARY CONDITIONS
FIRES-T3 2058           C
FIRES-T3 2059           C
FIRES-T3 2060                 COMMON /CONTROL/ ITITLE(6),IREAD(80),NIN,NOUT,NPUNCH,NUMNP,NEL1D,N
FIRES-T3 2061                1EL2D,NEL3D,NUMEL,MBAND,NMAT,NFBC1D,NFBC2D,NFBC3D,NBCMAT,NBCTYP
FIRES-T3 2062                 DIMENSION MAT(1), FXYS(1)
FIRES-T3 2063           C
FIRES-T3 2064           C     OUTPUT PAGE HEADING
FIRES-T3 2065           C
FIRES-T3 2066                 WRITE (NOUT,40)
FIRES-T3 2067                 WRITE (NOUT,50)
FIRES-T3 2068                 WRITE (NOUT,60) ITITLE
FIRES-T3 2069           C
FIRES-T3 2070                 IF (NBCTYP.EQ.10HLINEAR BC ) GO TO 20
FIRES-T3 2071           C
FIRES-T3 2072           C     NON-LINEAR FIRE BOUNDARY CONDITION
FIRES-T3 2073           C
FIRES-T3 2074                 WRITE (NOUT,70)
FIRES-T3 2075                 WRITE (NOUT,50)
FIRES-T3 2076                 WRITE (NOUT,80)
FIRES-T3 2077                 READ (NIN,90) SP,TSHIFT
FIRES-T3 2078                 WRITE (NOUT,100) SP,TSHIFT
FIRES-T3 2079                 WRITE (NOUT,110)
FIRES-T3 2080           C
FIRES-T3 2081                 FXYS(1)=SP
FIRES-T3 2082                 FXYS(2)=TSHIFT
FIRES-T3 2083                 NSTORE=3
FIRES-T3 2084           C
FIRES-T3 2085           C     INPUT DIFFERENT MATERIAL PROPERTIES FOR FIRE BC
FIRES-T3 2086           C
FIRES-T3 2087                 DO 10 I=1,NBCMAT
FIRES-T3 2088                 MAT(I)=NSTORE
FIRES-T3 2089                 READ (NIN,90) A,P,V,AB,EF,ES
FIRES-T3 2090                 WRITE (NOUT,120) I,A,P,V,AB,EF,ES
FIRES-T3 2091                 FXYS(NSTORE)=A
FIRES-T3 2092                 FXYS(NSTORE+1)=P
FIRES-T3 2093                 FXYS(NSTORE+2)=V
FIRES-T3 2094                 FXYS(NSTORE+3)=AB
FIRES-T3 2095                 FXYS(NSTORE+4)=EF
FIRES-T3 2096                 FXYS(NSTORE+5)=ES
FIRES-T3 2097                 NSTORE=NSTORE+6
FIRES-T3 2098              10 CONTINUE
FIRES-T3 2099                 RETURN
FIRES-T3 2100           C
FIRES-T3 2101              20 CONTINUE
FIRES-T3 2102           C
FIRES-T3 2103           C     LINEAR FIRE BOUNDARY CONDITION
FIRES-T3 2104           C
FIRES-T3 2105                 WRITE (NOUT,130)
FIRES-T3 2106                 WRITE (NOUT,50)
FIRES-T3 2107                 WRITE (NOUT,140)
```

```
FIRES-T3 2108          C
FIRES-T3 2109                NSTORE=1
FIRES-T3 2110                DO 30 I=1,NBCMAT
FIRES-T3 2111                WRITE (NOUT,150) I
FIRES-T3 2112                READ (NIN,160) K
FIRES-T3 2113                MS=(I-1)*2
FIRES-T3 2114                MAT(MS+1)=NSTORE
FIRES-T3 2115                MAT(MS+2)=K
FIRES-T3 2116          C
FIRES-T3 2117                CALL MATIN (K,FXYS(NSTORE),FXYS(NSTORE+K),FXYS(NSTORE+K+K))
FIRES-T3 2118          C
FIRES-T3 2119                NSTORE=NSTORE+3*K
FIRES-T3 2120                IF (K.EQ.0) NSTORE=NSTORE+1
FIRES-T3 2121             30 CONTINUE
FIRES-T3 2122          C
FIRES-T3 2123                RETURN
FIRES-T3 2124          C
FIRES-T3 2125          C
FIRES-T3 2126             40 FORMAT (1H6,5(/))
FIRES-T3 2127             50 FORMAT (61H ***********************************************************
FIRES-T3 2128               1******)
FIRES-T3 2129             60 FORMAT (/5X50HFIRES-T3  -  FIRE RESPONSE OF STRUCTURES - THERMAL,/
FIRES-T3 2130               1/1X,6A10)
FIRES-T3 2131             70 FORMAT (/5X,34HNON-LINEAR FIRE BOUNDARY CONDITION,/)
FIRES-T3 2132             80 FORMAT (//1X,60HQ=A*(TF-TS)**N+SB*V*(AB*EF*(TF+TSHIFT)**4-ES*(TS+T
FIRES-T3 2133               1SHIFT)**4))
FIRES-T3 2134             90 FORMAT (8E10.0)
FIRES-T3 2135            100 FORMAT (//1X,5HWHERE/6X,28HTF - PSUEDO FIRE TEMPERATURE,/6X,24HTS
FIRES-T3 2136               1- SURFACE TEMPERATURE,/6X,33HSB - STEFAN BOLZTMANN CONSTANT = ,E12
FIRES-T3 2137               2.4/6X,47HTSHIFT - SHIFT TO ABSOLUTE TEMPERATURE SCALE = ,F8.1/1X,3
FIRES-T3 2138               3HAND)
FIRES-T3 2139            110 FORMAT (//58H MAT  CONVECT  CONVECT     VIEW  ABSORPT     FIRE  SU
FIRES-T3 2140               1RFACE,/58H NUM   FACTOR    POWER   FACTOR            EMISSIV  EMISS
FIRES-T3 2141               2IV,/10X,3H(A),6X,3H(N),6X,3H(V),5X,4H(AB),5X,4H(EF),5X,4H(ES))
FIRES-T3 2142            120 FORMAT (/14,6F9.3)
FIRES-T3 2143            130 FORMAT (/5X,30HLINEAR FIRE BOUNDARY CONDITION,/)
FIRES-T3 2144            140 FORMAT (//9X,16HQ = H(T)*(TF-TS)//10X,5HWHERE,/15X,31HH(T) - HEAT
FIRES-T3 2145               1TRANSFER COEFFICENT,/15X,28HTF - PSUEDO FIRE TEMPERATURE,/15X,24HT
FIRES-T3 2146               2S - SURFACE TEMPERATURE,/15X,33HT - AVERAGE TEMPERATUTE (TF+TS)/2,
FIRES-T3 2147               3//)
FIRES-T3 2148            150 FORMAT (//,25H    . . . MATERIAL NUMBER ,I4,6H . . .)
FIRES-T3 2149            160 FORMAT (I5)
FIRES-T3 2150                END
```

```
FIRES-T3 2151                SUBROUTINE FIREBC (X,Y,Z,KCODE,DAREA,THICK,LI,LJ,LK,LL,LMAT,LFIRE,A
FIRES-T3 2152               1IJKL,LELEM)
FIRES-T3 2153          C
FIRES-T3 2154          C
FIRES-T3 2155          C     SUBROUTINE *FIREBC* INPUTS THE GEOMETRIC DESCRIPTION OF THE
FIRES-T3 2156          C     SURFACE OF THE SYSTEM THAT WILL BE DIRECTLY EXPOSED TO THE
FIRES-T3 2157          C     FIRE ENVIRONMENT
FIRES-T3 2158          C
FIRES-T3 2159          C
FIRES-T3 2160                COMMON /CONTROL/ ITITLE(6),IREAD(80),NIN,NOUT,NPUNCH,NUMNP,NELID,N
FIRES-T3 2161               1EL2D,NEL3D,NUMEL,NBAND,NMAT,NFBC1D,NFBC2D,NFBC3D,NBCMAT,NBCTYP
FIRES-T3 2162                COMMON /SURFACE/ NS1,NS2,NS3
FIRES-T3 2163                DIMENSION X(1), Y(1), KODE(1), LI(1), LJ(1), LMAT(1), LFIRE(1), Z(
FIRES-T3 2164               1)1, LK(1), LL(1), AIJKL(1), DAREA(1), THICK(1), LELEM(1)
```

```
FIRES-T3 2227          C
FIRES-T3 2228                DO 70 I=I1,I2
FIRES-T3 2229                IF (LMAT(I).GT.NDCMAT) GO TO 80
FIRES-T3 2230                II=LI(I)
FIRES-T3 2231                JJ=LJ(I-NFBC1D)
FIRES-T3 2232                IF (KCDE(II).EQ.4HTEMP.OR.KODE(JJ).EQ.4HTEMP) GO TO 80
FIRES-T3 2233             70 CONTINUE
FIRES-T3 2234                GO TO 90
FIRES-T3 2235          C
FIRES-T3 2236             80 I0=I-NFBC1D
FIRES-T3 2237                WRITE (NOUT,280) I0,LI(I),LJ(I0),LMAT(I),LFIRE(I),LELEM(I)
FIRES-T3 2238                STOP
FIRES-T3 2239          C
FIRES-T3 2240          C     CALCULATE AREA OF FIRE B.C. SURFACE ELEMENT
FIRES-T3 2241          C
FIRES-T3 2242             90 CONTINUE
FIRES-T3 2243                DO 100 I=I1,I2
FIRES-T3 2244                II=LI(I)
FIRES-T3 2245                JJ=LJ(I-NFBC1D)
FIRES-T3 2246                DX=X(II)-X(JJ)
FIRES-T3 2247                DY=Y(II)-Y(JJ)
FIRES-T3 2248                DZ=Z(II)-Z(JJ)
FIRES-T3 2249                D=DX*DX+DY*DY+DZ*DZ
FIRES-T3 2250                IK=LELEM(I)
FIRES-T3 2251            100 AIJKL(I)=SQRT(D)*THICK(IK)
FIRES-T3 2252          C
FIRES-T3 2253          C     OUTPUT SURFACE ELEMENT DATA
FIRES-T3 2254          C
FIRES-T3 2255                WRITE (NOUT,300)
FIRES-T3 2256                WRITE (NOUT,330) (I,LI(I+NFBC1D),LJ(I),LMAT(I+NFBC1D),LFIRE(I+NFBC
FIRES-T3 2257               1D),AIJKL(I+NFBC1D),I=1,NS2)
FIRES-T3 2258          C
FIRES-T3 2259          C     REDUCE AREA TO 1/2 FOR FUTURE CALCULATIONS
FIRES-T3 2260          C
FIRES-T3 2261                DO 110 I=I1,I2
FIRES-T3 2262            110 AIJKL(I)=AIJKL(I)/2.
FIRES-T3 2263          C
FIRES-T3 2264          C     T H R E E - D I M E N S I O N A L   E L E M E N T S
FIRES-T3 2265          C
FIRES-T3 2266            120 IF (NS3.EQ.0) GO TO 190
FIRES-T3 2267                WRITE (NOUT,220) NS3
FIRES-T3 2268          C
FIRES-T3 2269          C     INPUT FIRE B.C. DATA  -  TWO ELEMENTS PER CARD
FIRES-T3 2270          C
FIRES-T3 2271                I1=NFBC1D+NFBC2D+1
FIRES-T3 2272                I2=NFBC1D+NFBC2D+NS3
FIRES-T3 2273                N1=NFBC1D+NFBC2D
FIRES-T3 2274                READ (NIN,230) (LI(I),LJ(I-NFBC2D),LK(I-N1),LL(I-N1),LMAT(I),LFIRE
FIRES-T3 2275               1(I),I=I1,I2)
FIRES-T3 2276          C
FIRES-T3 2277          C     CHECK VALIDITY OF MATERIAL REQUIREMENTS AND PREVIOUSLY DECLARED
FIRES-T3 2278          C     BOUNDARY CONDITIONS.  FOR A SURFACE TO BE CONSIDERED A FIRE B.C.
FIRES-T3 2279          C     IT MUST BE BOUNDED BY NODES THAT HAVE A DECLARED FLOW B.C.
FIRES-T3 2280          C
FIRES-T3 2281                DO 130 I=1,NS3
FIRES-T3 2282                IF (LMAT(I+N1).GT.NDCMAT) GO TO 140
FIRES-T3 2283                II=LI(I+N1)
FIRES-T3 2284                JJ=LJ(I+NFBC2D)
FIRES-T3 2285                KK=LK(I)
FIRES-T3 2286                LLL=LL(I)
FIRES-T3 2287                IF (KCDE(II).EQ.4HTEMP.OR.KODE(JJ).EQ.4HTEMP) GO TO 140
FIRES-T3 2288                IF (KCDE(KK).EQ.4HTEMP.OR.KCDE(LLL).EQ.4HTEMP) GO TO 140
```

```
  130 CONTINUE
      GO TO 150
C
  140 CONTINUE
      WRITE (NOUT,260) I,LI(I+N1),LJ(I+NFBC2D),LK(I),LL(I),LMAT(I+N1),LF
     1IRE(I+N1)
      STOP
C
C     CALCULATE THE  AREA  OF THE FIRE BC SURFACE ELEMENTS
C
  150 CONTINUE
      DO 170 I=1,NS3
      II=LI(I+N1)
      JJ=LJ(NFBC2D+I)
      KK=LK(I)
      DX=X(II)-X(JJ)
      DY=Y(II)-Y(JJ)
      DZ=Z(II)-Z(JJ)
      D=DX*DX+DY*DY+DZ*DZ
      XL1=SQRT(D)
      DX=X(JJ)-X(KK)
      DY=Y(JJ)-Y(KK)
      DZ=Z(JJ)-Z(KK)
      D=DX*DX+DY*DY+DZ*DZ
      XL2=SQRT(D)
      AIJKL(I+N1)=XL1*XL2
      IF (LK(I)-LL(I)) 170,160,170
  160 AIJKL(I+N1)=0.5*AIJKL(I+N1)
  170 CONTINUE
C
C     OUTPUT SURFACE ELEMENT DATA
C
      WRITE (NOUT,310)
      WRITE (NOUT,340) (I,LI(I+N1),LJ(I+NFBC2D),LK(I),LL(I),LMAT(I+N1),L
     1FIRE(I+N1),AIJKL(I+N1),I=1,NS3)
C
C     REDUCE THE SURFACE  AREA  BY 1/4 TO AID IN FUTURE COMPUTATION
C
      DO 180 I=I1,I2
  180 AIJKL(I)=.25*AIJKL(I)
C
  190 RETURN
C
C
C
  200 FORMAT (////16H . . . THERE ARE,I4,40H 1-D SURFACE NODES EXPOSED T
     1O FIRE . . .)
  210 FORMAT (////16H . . . THERE ARE,I4,41H 2-D SURFACE ELEMENTS EXPOSE
     1D TO FIRE . .)
  220 FORMAT (////16H . . . THERE ARE,I4,41H 3-D SURFACE ELEMENTS EXPOSE
     1D TO FIRE . .)
  230 FORMAT (12I5)
  240 FORMAT (16I5)
  250 FORMAT (15I5)
  260 FORMAT (5(/),54H  - - - PROGRAM TERMINATED - FIRE BC INPUT ERROR -
     1 - -,1X,7I5)
  270 FORMAT (5(/),54H  - - - PROGRAM TERMINATED - FIRE BC INPUT ERROR -
     1 - -,1X,5I5)
  280 FORMAT (5(/),54H  - - - PROGRAM TERMINATED - FIRE BC INPUT ERROR -
     1 - -,1X,6I5)
  290 FORMAT (//9X,47HDESCRIPTION OF SURFACE DIRECTLY EXPOSED TO FIRE,//
     138H FIREBC   NODE    MAT   FIRE       AREA/28H SURFACE      I    TYPE
```

```
FIRES-T3 2351          2   TYPE/)
FIRES-T3 2352      300 FORMAT (//9X,47HDESCRIPTION OF SURFACE DIRECTLY EXPOSED TO FIRE,//
FIRES-T3 2353         145H FIREBC   NODE   NODE    MAT   FIRE       AREA/35H SURFACE      I
FIRES-T3 2354         2       J   TYPE   TYPE/)
FIRES-T3 2355      310 FORMAT (//9X,47HDESCRIPTION OF SURFACE DIRECTLY EXPOSED TO FIRE,//
FIRES-T3 2356         159H FIREBC   NODE   NODE   NODE   NODE    MAT   FIRE       AREA/49H
FIRES-T3 2357         2 SURFACE     I      J      K      L    TYPE   TYPE/)
FIRES-T3 2358      320 FORMAT (4I7,F10.3)
FIRES-T3 2359      330 FORMAT (5I7,F10.3)
FIRES-T3 2360      340 FORMAT (7I7,F10.3)
FIRES-T3 2361      350 FORMAT (80R1)
FIRES-T3 2362      360 FORMAT (6(/),45H - - - PROGRAM TERMINATED - INPUT ERROR - - -,//1X
FIRES-T3 2363         1,80R1)
FIRES-T3 2364          END
```

```
FIRES-T3 2365          SUBROUTINE FIRE (LI,LJ,LK,LL,LMAT,LFIRE,AIJKL,MAT,FXYS,T,TFIRE,B)
FIRES-T3 2366    C
FIRES-T3 2367    C
FIRES-T3 2368    C     SUBROUTINE *FIRE* CALCULATES THE HEAT FLOW ASSOCIATED WITH A FIRE
FIRES-T3 2369    C     REPRESENTED THROUGH TEMPERATURES TFIRE(I).  THESE HEAT FLOWS
FIRES-T3 2370    C     ARE DETERMINED UPON THE BASIS OF THE ASSUMED TEMPERATURE VECTOR T.
FIRES-T3 2371    C
FIRES-T3 2372    C
FIRES-T3 2373          COMMON /CONTROL/ ITITLE(6),IREAD(80),NIN,NOUT,NPUNCH,NUMNP,NELID,N
FIRES-T3 2374         1EL2D,NEL3D,NUMEL,MBAND,NMAT,NFBC1D,NFBC2D,NFBC3D,NBCMAT,NBCTYP
FIRES-T3 2375          COMMON /SURFACE/ NS1,NS2,NS3
FIRES-T3 2376          DIMENSION LI(1), LJ(1), LMAT(1), LFIRE(1), AIJKL(1), MAT(1), FXYS(
FIRES-T3 2377         11), T(1), TFIRE(1), TF4(4), B(1), LK(1), LL(1)
FIRES-T3 2378    C
FIRES-T3 2379    C     IF BOUNDARY CONDITION IS NONLINEAR TAKE FIRE TEMPERATURES TO
FIRES-T3 2380    C     THEIR FOURTH POWERS
FIRES-T3 2381    C
FIRES-T3 2382          IF (NBCTYP.EQ.10HLINEAR BC ) GO TO 20
FIRES-T3 2383          SB=FXYS(1)
FIRES-T3 2384          TSHIFT=FXYS(2)
FIRES-T3 2385          DO 10 I=1,4
FIRES-T3 2386          TF=TFIRE(I)+TSHIFT
FIRES-T3 2387          TF=TF*TF
FIRES-T3 2388       10 TF4(I)=TF*TF
FIRES-T3 2389    C
FIRES-T3 2390    C     O N E - D I M E N S I O N A L   E L E M E N T S
FIRES-T3 2391    C
FIRES-T3 2392       20 IF (NS1.EQ.0) GO TO 40
FIRES-T3 2393          DO 30 N=1,NS1
FIRES-T3 2394    C
FIRES-T3 2395    C     ESTABLISH BASIC FIRE B.C. VARIABLES FOR THIS SURFACE ELEMENT
FIRES-T3 2396    C
FIRES-T3 2397          N3=N
FIRES-T3 2398          I=LI(N)
FIRES-T3 2399          M=LMAT(N)
FIRES-T3 2400          LF=LFIRE(N)
FIRES-T3 2401          TF=TFIRE(LF)
FIRES-T3 2402          TS=T(I)
FIRES-T3 2403    C
FIRES-T3 2404    C     FIND HEAT FLOW DUE TO FIRE B.C.
FIRES-T3 2405    C
FIRES-T3 2406          Q=QFIRE(TF,TS,LF,NBCTYP,M,N3,TSHIFT,SB,TF4,MAT,FXYS,AIJKL)
FIRES-T3 2407    C
```

```
FIRES-T3 2408          C     ADD HEAT FLOW TO NODES BOUNDING SURFACE ELEMENT
FIRES-T3 2409          C
FIRES-T3 2410                B(I)=B(I)+Q
FIRES-T3 2411             30 CONTINUE
FIRES-T3 2412          C
FIRES-T3 2413          C     T W O - D I M E N S I O N A L   E L E M E N T S
FIRES-T3 2414          C
FIRES-T3 2415             40 IF (NS2.EQ.0) GO TO 60
FIRES-T3 2416                DO 50 N=1,NS2
FIRES-T3 2417          C
FIRES-T3 2418          C     ESTABLISH BASIC FIRE B.C. VARIABLES FOR THIS SURFACE ELEMENT
FIRES-T3 2419          C
FIRES-T3 2420                N3=N+NFBC1D
FIRES-T3 2421                I=LI(N3)
FIRES-T3 2422                J=LJ(N)
FIRES-T3 2423                M=LMAT(N3)
FIRES-T3 2424                LF=LFIRE(N3)
FIRES-T3 2425                TF=TFIRE(LF)
FIRES-T3 2426                TS=0.5*(T(I)+T(J))
FIRES-T3 2427          C
FIRES-T3 2428          C     FIND HEAT FLOW DUE TO FIRE B.C.
FIRES-T3 2429          C
FIRES-T3 2430                Q=QFIRE(TF,TS,LF,NBCTYP,M,N3,TSHIFT,SB,TF4,MAT,FXYS,AIJKL)
FIRES-T3 2431          C
FIRES-T3 2432          C     ADD HEAT FLOW TO NODES BOUNDING SURFACE ELEMENT
FIRES-T3 2433          C
FIRES-T3 2434                B(I)=B(I)+Q
FIRES-T3 2435                B(J)=B(J)+Q
FIRES-T3 2436             50 CONTINUE
FIRES-T3 2437          C
FIRES-T3 2438          C     T H R E E - D I M E N S I O N A L   E L E M E N T S
FIRES-T3 2439          C
FIRES-T3 2440             60 IF (NS3.EQ.0) GO TO 80
FIRES-T3 2441                DO 70 N=1,NS3
FIRES-T3 2442          C
FIRES-T3 2443          C     ESTABLISH BASIC FIRE B.C. VARIABLES FOR THIS SURFACE ELEMENT
FIRES-T3 2444          C
FIRES-T3 2445                N3=N+NFBC1D+NFBC2D
FIRES-T3 2446                I=LI(N3)
FIRES-T3 2447                J=LJ(N+NFBC2D)
FIRES-T3 2448                NK=LK(N)
FIRES-T3 2449                NL=LL(N)
FIRES-T3 2450                M=LMAT(N3)
FIRES-T3 2451                LF=LFIRE(N3)
FIRES-T3 2452                TF=TFIRE(LF)
FIRES-T3 2453                TS=.25*(T(I)+T(J)+T(NK)+T(NL))
FIRES-T3 2454          C
FIRES-T3 2455          C     FIND HEAT FLOW DUE TO FIRE B.C.
FIRES-T3 2456          C
FIRES-T3 2457                Q=QFIRE(TF,TS,LF,NBCTYP,M,N3,TSHIFT,SB,TF4,MAT,FXYS,AIJKL)
FIRES-T3 2458          C
FIRES-T3 2459          C     ADD HEAT FLOW TO NODES BOUNDING SURFACE ELEMENT
FIRES-T3 2460          C
FIRES-T3 2461                B(I)=B(I)+Q
FIRES-T3 2462                B(J)=B(J)+Q
FIRES-T3 2463                B(NK)=B(NK)+Q
FIRES-T3 2464                B(NL)=B(NL)+Q
FIRES-T3 2465             70 CONTINUE
FIRES-T3 2466          C
FIRES-T3 2467             80 RETURN
FIRES-T3 2468                END
```

```
FIRES-T3 2469          FUNCTION QFIRE (TF,TS,LF,NBCTYP,M,N3,TSHIFT,SE,TF4,MAT,FXYS,AIJKL)
FIRES-T3 2470      C
FIRES-T3 2471      C
FIRES-T3 2472      C   FUNCTION *QFIRE* FINDS HEAT FLOW DUE TO FIRE ON SURFACE ELEMENT
FIRES-T3 2473      C
FIRES-T3 2474      C
FIRES-T3 2475          DIMENSION TF4(1), MAT(1), FXYS(1), AIJKL(1)
FIRES-T3 2476      C
FIRES-T3 2477      C
FIRES-T3 2478          DT=TF-TS
FIRES-T3 2479          IF (NBCTYP.EQ.1CHNON-LIN BC) GO TO 10
FIRES-T3 2480      C
FIRES-T3 2481      C   LINEAR FIRE BOUNDARY CONDITION
FIRES-T3 2482      C
FIRES-T3 2483          M=(M-1)*2
FIRES-T3 2484          JJ=MAT(M+1)
FIRES-T3 2485          K=MAT(M+2)
FIRES-T3 2486          TA=0.5*(TF+TS)
FIRES-T3 2487          H=VMAT(K,FXYS(JJ),FXYS(JJ+K),FXYS(JJ+K+K),TA,10H  H(T)     )
FIRES-T3 2488          Q=AIJKL(N3)*H*DT
FIRES-T3 2489          GO TO 50
FIRES-T3 2490      C
FIRES-T3 2491       10 CONTINUE
FIRES-T3 2492      C
FIRES-T3 2493      C   NON-LINEAR FIRE BOUNDARY CONDITION
FIRES-T3 2494      C
FIRES-T3 2495          K=MAT(M)
FIRES-T3 2496          A=FXYS(K)
FIRES-T3 2497          QC=0.0
FIRES-T3 2498          IF (A.EQ.0) GO TO 30
FIRES-T3 2499      C
FIRES-T3 2500      C   CALCULATE CONVECTION TERM - QC
FIRES-T3 2501      C
FIRES-T3 2502          P=FXYS(K+1)
FIRES-T3 2503          IF (P.EQ.1.0) GO TO 20
FIRES-T3 2504          SIGN=1.0
FIRES-T3 2505          IF (DT.LT.0) SIGN=-1.0
FIRES-T3 2506          DT=SIGN*DT
FIRES-T3 2507          QC=SIGN*A*DT**P
FIRES-T3 2508          GO TO 30
FIRES-T3 2509       20 QC=A*DT
FIRES-T3 2510       30 V=FXYS(K+2)
FIRES-T3 2511          QR=0.0
FIRES-T3 2512          IF (V.EQ.0) GO TO 40
FIRES-T3 2513      C
FIRES-T3 2514      C   CALCULATE RADIATION TERM - QR
FIRES-T3 2515      C
FIRES-T3 2516          TS=TS+TSHIFT
FIRES-T3 2517          TS=TS*TS
FIRES-T3 2518          TS=TS*TS
FIRES-T3 2519          AB=FXYS(K+3)
FIRES-T3 2520          EF=FXYS(K+4)
FIRES-T3 2521          ES=FXYS(K+5)
FIRES-T3 2522          QR=SE*V*(AB*EF*TF4(LF)-ES*TS)
FIRES-T3 2523       40 Q=AIJKL(N3)*(QC+QR)
FIRES-T3 2524       50 QFIRE=Q
FIRES-T3 2525          RETURN
FIRES-T3 2526      C
FIRES-T3 2527          END
```

```
FIRES-T3 2528          SUBROUTINE EXOELS (X,Y,Z,LM,BAREA,THICK,VOLUME,IEL,IMAT,VEL)
FIRES-T3 2529      C
FIRES-T3 2530      C
FIRES-T3 2531      C   SUBROUTINE *EXOELS* INPUTS DATA DESCRIBING ALL ELEMENTS WHICH HAVE
FIRES-T3 2532      C   INTERNAL HEAT GENERATION
FIRES-T3 2533      C
FIRES-T3 2534      C
FIRES-T3 2535          COMMON /CONTROL/ ITITLE(6),IREAD(80),NIN,NOUT,NPUNCH,NUMNP,NEL1D,N
FIRES-T3 2536         1EL2D,NEL3D,NUMEL,MBAND,NMAT,NFBC1D,NFBC2D,NFBC3D,NBCMAT,NBCTYP
FIRES-T3 2537          COMMON /EXOTH/ NINT1D,NINT2D,NINT3D,NINT,NCINT
FIRES-T3 2538          DIMENSION X(1), Y(1), Z(1), LM(1), BAREA(1), THICK(1), VOLUME(1),
FIRES-T3 2539         1IEL(1), IMAT(1), VEL(1)
FIRES-T3 2540      C
FIRES-T3 2541      C   O N E - D I M E N S I O N A L   E L E M E N T S
FIRES-T3 2542      C
FIRES-T3 2543          IF (NINT1D.EQ.0) GO TO 20
FIRES-T3 2544      C
FIRES-T3 2545      C   INPUT 1-D ELEMENTS WITH INTERNAL HEAT GENERATION - 8 ELEMENTS/CARD
FIRES-T3 2546      C
FIRES-T3 2547          READ (NIN,70) (IEL(I),IMAT(I),I=1,NINT1D)
FIRES-T3 2548      C
FIRES-T3 2549      C   FIND VOLUME OF ELEMENTS AND OUTPUT DATA
FIRES-T3 2550      C
FIRES-T3 2551          DO 10 N=1,NINT1D
FIRES-T3 2552          IE=IEL(N)
FIRES-T3 2553          II=LM(2*IE-1)
FIRES-T3 2554          JJ=LM(2*IE)
FIRES-T3 2555          DX=X(II)-X(JJ)
FIRES-T3 2556          DY=Y(II)-Y(JJ)
FIRES-T3 2557          DZ=Z(II)-Z(JJ)
FIRES-T3 2558          DL=SQRT(DX*DX+DY*DY+DZ*DZ)
FIRES-T3 2559       10 VEL(N)=DL*BAREA(IE)
FIRES-T3 2560          WRITE (NOUT,80) NINT1D
FIRES-T3 2561          WRITE (NOUT,90) (I,IEL(I),IMAT(I),VEL(I),I=1,NINT1D)
FIRES-T3 2562      C
FIRES-T3 2563      C   T W O - D I M E N S I O N A L   E L E M E N T S
FIRES-T3 2564      C
FIRES-T3 2565       20 IF (NINT2D.EQ.0) GO TO 40
FIRES-T3 2566      C
FIRES-T3 2567      C   INPUT 2-D ELEMENTS WITH INTERNAL HEAT GENERATION - 8 ELEMENTS/CARD
FIRES-T3 2568      C
FIRES-T3 2569          I1=NINT1D+1
FIRES-T3 2570          I2=NINT1D+NINT2D
FIRES-T3 2571          READ (NIN,70) (IEL(I),IMAT(I),I=I1,I2)
FIRES-T3 2572      C
FIRES-T3 2573      C   FIND VOLUME OF ELEMENTS AND OUTPUT DATA
FIRES-T3 2574      C
FIRES-T3 2575          DO 30 N=I1,I2
FIRES-T3 2576          IE=IEL(N)
FIRES-T3 2577          IARG=2*NEL1D+4*IE-3
FIRES-T3 2578          II=LM(IARG)
FIRES-T3 2579          JJ=LM(IARG+1)
FIRES-T3 2580          KK=LM(IARG+2)
FIRES-T3 2581          LL=LM(IARG+3)
FIRES-T3 2582          AJ=X(JJ)-X(II)
FIRES-T3 2583          AK=X(KK)-X(II)
FIRES-T3 2584          BJ=Y(JJ)-Y(II)
FIRES-T3 2585          BK=Y(KK)-Y(II)
FIRES-T3 2586          AREA=(AJ*BK-AK*BJ)/2.
FIRES-T3 2587          AJ=X(KK)-X(II)
FIRES-T3 2588          AK=X(LL)-X(II)
FIRES-T3 2589          BJ=Y(KK)-Y(II)
```

```
FIRES-T3 2590          BK=Y(LL)-Y(II)
FIRES-T3 2591          AREA=AREA+(AJ*BK-AK*BJ)/2.
FIRES-T3 2592       30 VEL(N)=AREA*THICK(IE)
FIRES-T3 2593          WRITE (NOUT,100) NINT2D
FIRES-T3 2594          WRITE (NOUT,90) (I,IEL(I+NINT1D),IMAT(I+NINT1D),VEL(I+NINT1D),I=1,
FIRES-T3 2595         1NINT2D)
FIRES-T3 2596 C
FIRES-T3 2597 C        T H R E E - D I M E N S I O N A L   E L E M E N T S
FIRES-T3 2598 C
FIRES-T3 2599       40 IF (NINT3D.EQ.0) GO TO 60
FIRES-T3 2600 C
FIRES-T3 2601 C        INPUT 3-D ELEMENTS WITH INTERNAL HEAT GENERATION - 8 ELEMENTS/CARD
FIRES-T3 2602 C
FIRES-T3 2603          I1=NINT1D+NINT2D+1
FIRES-T3 2604          I2=NINT
FIRES-T3 2605          READ (NIN,70) (IEL(I),IMAT(I),I=I1,I2)
FIRES-T3 2606 C
FIRES-T3 2607 C        FIND VOLUME OF ELEMENTS AND OUTPUT DATA
FIRES-T3 2608 C
FIRES-T3 2609          DO 50 N=I1,I2
FIRES-T3 2610          IE=IEL(N)
FIRES-T3 2611       50 VEL(N)=VOLUME(IE)
FIRES-T3 2612          N1=NINT1D+NINT2D
FIRES-T3 2613          WRITE (NOUT,110) NINT3D
FIRES-T3 2614          WRITE (NOUT,90) (I,IEL(I+N1),IMAT(I+N1),I=1,NINT2D)
FIRES-T3 2615 C
FIRES-T3 2616 C
FIRES-T3 2617       60 RETURN
FIRES-T3 2618 C
FIRES-T3 2619 C
FIRES-T3 2620 C
FIRES-T3 2621 C
FIRES-T3 2622       70 FORMAT (8(2I5))
FIRES-T3 2623       80 FORMAT (///9X,16H. . . THERE ARE ,I4,28H 1-D EXOTHERMIC ELEMENTS .
FIRES-T3 2624         1 .//2(30H          N   EL  FUN     VOLUME))
FIRES-T3 2625       90 FORMAT (2(I10,2I5,F10.4))
FIRES-T3 2626      100 FORMAT (///9X,16H. . . THERE ARE ,I4,28H 2-D EXOTHERMIC ELEMENTS .
FIRES-T3 2627         1 .//2(30H          N   EL  FUN     VOLUME))
FIRES-T3 2628      110 FORMAT (///9X,16H. . . THERE ARE ,I4,28H 3-D EXOTHERMIC ELEMENTS .
FIRES-T3 2629         1 .//2(30H          N   EL  FUN     VOLUME))
FIRES-T3 2630          END
```

```
FIRES-T3 2631          SUBROUTINE EXOFUN (IEXO,EXYS,NSTORE)
FIRES-T3 2632 C
FIRES-T3 2633 C
FIRES-T3 2634 C        SUBROUTINE *EXOFUN* INPUTS THE EXOTHERMIC HEAT GENERATION CURVE
FIRES-T3 2635 C        AS A LINEARIZED FUNCTION OF TIME
FIRES-T3 2636 C
FIRES-T3 2637 C
FIRES-T3 2638          COMMON /CONTROL/ TITLE(6),IREAD(80),NIN,NOUT,NPUNCH,NUMNP,NELID,N
FIRES-T3 2639         1EL2D,NEL3D,NUMEL,MBAND,NMAT,NFBC1D,NFBC2D,NFBC3D,NBCMAT,NBCTYP
FIRES-T3 2640          COMMON /EXOTH/ NINT1D,NINT2D,NINT3D,NINT,NGINT
FIRES-T3 2641          DIMENSION IEXO(1), EXYS(1)
FIRES-T3 2642          NSTORE=1
FIRES-T3 2643 C
FIRES-T3 2644 C        OUTPUT PAGE HEADING
FIRES-T3 2645 C
FIRES-T3 2646          WRITE (NOUT,40)
```

```
FIRES-T3 2647          WRITE (NOUT,50)
FIRES-T3 2648          WRITE (NOUT,60) ITITLE
FIRES-T3 2649          WRITE (NOUT,70) NOINT
FIRES-T3 2650          WRITE (NOUT,50)
FIRES-T3 2651    C
FIRES-T3 2652          DO 30 N=1,NOINT
FIRES-T3 2653    C
FIRES-T3 2654    C     READ CONTROL CARD
FIRES-T3 2655    C
FIRES-T3 2656    C        NSTORE = IEXO(1) - STARTING POINT FOR FUNCTION N IN EXYS
FIRES-T3 2657    C        MK = IEXO(2) - NUMBER OF POINTS IN INPUT HEATING CURVE
FIRES-T3 2658    C        MT = IEXO(3) - TYPE OF INPUT HEATING DATA
FIRES-T3 2659    C                       EQ. 0 - HEAT RATE PER UNIT VOLUME
FIRES-T3 2660    C                       EQ. 1 - HEAT RATE PER UNIT MASS
FIRES-T3 2661    C
FIRES-T3 2662          WRITE (NOUT,110) N
FIRES-T3 2663          READ (NIN,120) MK,MT
FIRES-T3 2664          MS=(N-1)*3
FIRES-T3 2665          IEXO(MS+1)=NSTORE
FIRES-T3 2666          IEXO(MS+2)=MK
FIRES-T3 2667          IEXO(MS+3)=MT
FIRES-T3 2668    C
FIRES-T3 2669    C     INPUT HEATING FUNCTION
FIRES-T3 2670    C
FIRES-T3 2671          N1=NSTORE-1
FIRES-T3 2672          READ (NIN,130) (EXYS(N1+I),EXYS(N1+MK+I),I=1,MK)
FIRES-T3 2673          M=MK-1
FIRES-T3 2674    C
FIRES-T3 2675    C     DETERMINE SLOPES AND PRINT HEATING FUNCTION
FIRES-T3 2676    C
FIRES-T3 2677          DO 10 I=1,M
FIRES-T3 2678          N1=NSTORE+I-1
FIRES-T3 2679       10 EXYS(N1+MK+MK)=(EXYS(N1+MK+1)-EXYS(N1+MK))/(EXYS(N1+1)-EXYS(N1))
FIRES-T3 2680          WRITE (NOUT,80)
FIRES-T3 2681          DO 20 I=1,M
FIRES-T3 2682          N1=NSTORE+I-1
FIRES-T3 2683          WRITE (NOUT,90) I,EXYS(N1),EXYS(N1+MK)
FIRES-T3 2684       20 WRITE (NOUT,100) EXYS(N1+MK+MK)
FIRES-T3 2685          WRITE (NOUT,90) MK,EXYS(NSTORE+MK-1),EXYS(NSTORE+MK+MK-1)
FIRES-T3 2686          NSTORE=NSTORE+3*MK
FIRES-T3 2687       30 CONTINUE
FIRES-T3 2688          RETURN
FIRES-T3 2689    C
FIRES-T3 2690    C
FIRES-T3 2691    C
FIRES-T3 2692    C
FIRES-T3 2693       40 FORMAT (1H0,5(/))
FIRES-T3 2694       50 FORMAT (61H ***********************************************
FIRES-T3 2695         1******)
FIRES-T3 2696       60 FORMAT (/5X50HFIRES-T3  -  FIRE RESPONSE OF STRUCTURES - THERMAL,/
FIRES-T3 2697         1/1X,6A10)
FIRES-T3 2698       70 FORMAT (/5X,36HINTERNAL HEAT GENERATION INFORMATION,//5X,5HTHERE A
FIRES-T3 2699         1RE,I4,25H DIFFERENT HEAT FUNCTIONS/)
FIRES-T3 2700       80 FORMAT (/5X,19HNODE              TIME,6X,5H HEAT,7X,5HSLOPE,/)
FIRES-T3 2701       90 FORMAT (I9,F13.1,6X,G11.3)
FIRES-T3 2702      100 FORMAT (39X,G11.3)
FIRES-T3 2703      110 FORMAT (////,26H . . . . FUNCTION NUMBER ,I4,9H  . . . .,/)
FIRES-T3 2704      120 FORMAT (2I5)
FIRES-T3 2705      130 FORMAT (8F10.0)
FIRES-T3 2706          END
```

```
FIRES-T3 2707          SUBROUTINE QEXO (LM,IEL,IMAT,IEXO,EXYS,AT,MATL,VEL,MMTYPE,Q,XYS,TI
FIRES-T3 2708         1ME)
FIRES-T3 2709    C
FIRES-T3 2710    C
FIRES-T3 2711    C     SUBROUTINE *QEXO* COMPUTES NODAL HEAT FLOW DUE TO EXOTHERMIC
FIRES-T3 2712    C     REACTION WITHIN ELEMENTS
FIRES-T3 2713    C
FIRES-T3 2714    C
FIRES-T3 2715          COMMON /CONTROL/ ITITLE(6),IREAD(80),NIN,NOUT,NPUNCH,NUMNF,NEL1D,N
FIRES-T3 2716         1EL2D,NEL3D,NUMEL,MBAND,NMAT,NFBC1D,NFBC2D,NFBC3D,NBCMAT,NBCTYP
FIRES-T3 2717          COMMON /EXOTH/ NINT1D,NINT2D,NINT3D,NINT,NGINT
FIRES-T3 2718          DIMENSION LM(1), IEL(1), IMAT(1), IEXO(1), EXYS(1), AT(1), MATL(1)
FIRES-T3 2719         1, VEL(1), MMTYPE(1), B(1), XYS(1)
FIRES-T3 2720    C
FIRES-T3 2721    C     O N E - D I M E N S I O N A L   E L E M E N T S
FIRES-T3 2722    C
FIRES-T3 2723          IF (NINT1D.EQ.0) GO TO 30
FIRES-T3 2724          DO 20 N=1,NINT1D
FIRES-T3 2725          IE=IEL(N)
FIRES-T3 2726          II=LM(2*IE-1)
FIRES-T3 2727          JJ=LM(2*IE)
FIRES-T3 2728          MS=IMAT(N)
FIRES-T3 2729          MS=3*(MS-1)
FIRES-T3 2730          J=IEXO(MS+1)
FIRES-T3 2731          K=IEXO(MS+2)
FIRES-T3 2732          LTYPE=IEXO(MS+3)
FIRES-T3 2733          Q=VMAT(K,EXYS(J),EXYS(J+K),EXYS(J+K+K),TIME,10HHEAT FUNCT)
FIRES-T3 2734          IF (LTYPE.EQ.0) GO TO 10
FIRES-T3 2735          TEMP=AT(IE)
FIRES-T3 2736          MS=MMTYPE(IE)
FIRES-T3 2737          MS=(MS-1)*6
FIRES-T3 2738          J=MATL(MS+5)
FIRES-T3 2739          K=MATL(MS+6)
FIRES-T3 2740          DENS=VMAT(K,XYS(J),XYS(J+K),XYS(J+K+K),TEMP,10H       DENS)
FIRES-T3 2741          Q=Q*DENS
FIRES-T3 2742       10 QADD=Q*VEL(N)/2.
FIRES-T3 2743          B(II)=B(II)+QADD
FIRES-T3 2744       20 B(JJ)=B(JJ)+QADD
FIRES-T3 2745    C
FIRES-T3 2746    C     T W O - D I M E N S I O N A L   E L E M E N T S
FIRES-T3 2747    C
FIRES-T3 2748       30 IF (NINT2D.EQ.0) GO TO 60
FIRES-T3 2749          I1=NINT1D+1
FIRES-T3 2750          I2=NINT1D+NINT2D
FIRES-T3 2751          DO 50 N=I1,I2
FIRES-T3 2752          IE=IEL(N)
FIRES-T3 2753          N1=2*NEL1D+4*IE
FIRES-T3 2754          II=LM(N1-3)
FIRES-T3 2755          JJ=LM(N1-2)
FIRES-T3 2756          KK=LM(N1-1)
FIRES-T3 2757          LL=LM(N1)
FIRES-T3 2758          MS=IMAT(N)
FIRES-T3 2759          MS=3*(MS-1)
FIRES-T3 2760          J=IEXO(MS+1)
FIRES-T3 2761          K=IEXO(MS+2)
FIRES-T3 2762          LTYPE=IEXO(MS+3)
FIRES-T3 2763          Q=VMAT(K,EXYS(J),EXYS(J+K),EXYS(J+K+K),TIME,10HHEAT FUNCT)
FIRES-T3 2764          IF (LTYPE.EQ.0) GO TO 40
FIRES-T3 2765          TEMP=AT(NEL1D+IE)
FIRES-T3 2766          MS=MMTYPE(NEL1D+IE)
FIRES-T3 2767          MS=(MS-1)*6
FIRES-T3 2768          J=MATL(MS+5)
```

```
FIRES-T3 2769          K=MATL(MS+6)
FIRES-T3 2770          DENS=VMAT(K,XYS(J),XYS(J+K),XYS(J+K+K),TEMP,10H       DENS)
FIRES-T3 2771          Q=Q*DENS
FIRES-T3 2772       40 QADD=C*VEL(N)/4.
FIRES-T3 2773          B(II)=B(II)+QADD
FIRES-T3 2774          B(JJ)=B(JJ)+QADD
FIRES-T3 2775          B(KK)=B(KK)+QADD
FIRES-T3 2776       50 B(LL)=B(LL)+QADD
FIRES-T3 2777    C
FIRES-T3 2778    C     T H R E E - D I M E N S I O N A L   E L E M E N T S
FIRES-T3 2779    C
FIRES-T3 2780       60 IF (NINT3D.EQ.0) GO TO 90
FIRES-T3 2781          I1=NINT1D+NINT2D+1
FIRES-T3 2782          I2=NINT
FIRES-T3 2783          DO 80 N=I1,I2
FIRES-T3 2784          IE=IEL(N)
FIRES-T3 2785          N1=2*NEL1D+4*NEL2D+8*IE
FIRES-T3 2786          II=LM(N1-7)
FIRES-T3 2787          JJ=LM(N1-6)
FIRES-T3 2788          KK=LM(N1-5)
FIRES-T3 2789          LL=LM(N1-4)
FIRES-T3 2790          III=LM(N1-3)
FIRES-T3 2791          JJJ=LM(N1-2)
FIRES-T3 2792          KKK=LM(N1-1)
FIRES-T3 2793          LLL=LM(N1)
FIRES-T3 2794          MS=IMAT(N)
FIRES-T3 2795          MS=(MS-1)*3
FIRES-T3 2796          J=IEXO(MS+1)
FIRES-T3 2797          K=IEXO(MS+2)
FIRES-T3 2798          LTYPE=IEXO(MS+3)
FIRES-T3 2799          Q=VMAT(K,EXYS(J),EXYS(J+K),EXYS(J+K+K),TIME,10HHEAT FUNCT)
FIRES-T3 2800          IF (LTYPE.EQ.0) GO TO 70
FIRES-T3 2801          TEMP=AT(NEL1D+NEL2D+IE)
FIRES-T3 2802          MS=MMTYPE(NEL1D+NEL2D+IE)
FIRES-T3 2803          MS=(MS-1)*6
FIRES-T3 2804          K=MATL(MS+6)
FIRES-T3 2805          J=MATL(MS+5)
FIRES-T3 2806          DENS=VMAT(K,XYS(J),XYS(J+K),XYS(J+K+K),TEMP,10H       DENS)
FIRES-T3 2807          Q=Q*DENS
FIRES-T3 2808       70 QADD=Q*VEL(N)/8.
FIRES-T3 2809          B(II)=B(II)+QADD
FIRES-T3 2810          B(JJ)=B(JJ)+QADD
FIRES-T3 2811          B(KK)=B(KK)+QADD
FIRES-T3 2812          B(LL)=B(LL)+QADD
FIRES-T3 2813          B(III)=B(III)+QADD
FIRES-T3 2814          B(JJJ)=B(JJJ)+QADD
FIRES-T3 2815          B(KKK)=B(KKK)+QADD
FIRES-T3 2816       80 B(LLL)=B(LLL)+QADD
FIRES-T3 2817    C
FIRES-T3 2818       90 RETURN
FIRES-T3 2819          END
```

RECENT REPORTS OF THE FIRE RESEARCH GROUP, UNIVERSITY OF CALIFORNIA, BERKELEY

1976
UCB FRG Report No.

76-1 Pagni, P. J., and Shih, T. M., "A Preliminary Analysis of Excess Pyrolyzate," June 1976. To be published in *16th International Symposium on Combustion*, Combustion Institute.

76-2 Pagni, P. J., *The Burning of Urethane Mattresses*, January 1976.

76-3 Demetrius, J. A., Parker, H. A., Williamson, R. B., et al., "Fire Containment Tests of Aircraft Interior Panels," May 1976. Published in *Journal of Fire & Flammability*, 7, 257-278 (1976)

76-4 Yuen, W. W., and Tien, C. L., "A Simple Calculation Scheme for the Luminous-Flame Emissivity," June 1976. To be published in *16th International Symposium on Combustion*, Combustion Institute.

76-5 Buckius, R. O., and Tien, C. L., "Infrared Flame Radiation," June 1976. Published in *International Journal of Heat Mass Transfer*, 20, 93-106 (1977)

76-6 Mathews, R. D., and Sawyer, R. F., "Limiting Oxygen Index Measurement and Interpretation in an Opposed Flow Diffusion Flame Apparatus," Revised edition, March 1976. Published in *Journal of Fire & Flammability*, 7, 200-216 (1976)

76-7 Williamson, R. B., "Fire Performance Under Full Scale Test Conditions -- A State Transition Model," June 1976. To be published in *16th International Symposium on Combustion*, Combustion Institute.

76-8 Chan, C., and Pagni, P. J. *Flame Spread in Luminar Opposed Flow.*

76-9 Felske, J. D., and Tien, C. L., *Milne-Eddington Nongray Approximation for Radiative Transfer in Gases and Soot Clouds.*

76-10 Cheung, Y. K., and Tien, C. L., *A New Finite-Difference Scheme for Convection-Type Problems.*

76-11 Buckius, R. O., and Tien, C. L., *Nongray Radiative Transfer in Sooty Gaseous Media.*

76-12 Bresler, B., Thielen, G., and Nizamuddin, Z., *Limit State Behavior of Reinforced Concrete Frames in Fire Environments*, and Bresler, B., *Response of Reinforced Concrete Frames to Fire*, September 1976.

76-13 Crossman, E. R. F. W., *Cost Effective Techniques for Improving Return Rate in Fire Oriented Mail Survey.*

76-14 Zachary, W. B., Crossman, E. R. F. W., and Quan, E. C., *The San Francisco Residential High-Rise Fire Safety Investigation.*

76-15 Sahota, M. S., *Heat and Mass Transfer in Porous Concrete Structures Subject to Fires*, PhD Dissertation, September 1976.

76-16 Babrauskas, V., *Fire Endurance in Buildings*, PhD Dissertation, October 1976.

RECENT REPORTS OF THE FIRE RESEARCH GROUP, UNIVERSITY OF CALIFORNIA, BERKELEY

1977
UCB FRG Report No.

77-1 Becker, J. M., and Bresler, B., "Reinforced Concrete Frames in Fire Environments," January 1977. Published in *ASCE Journal of the Structural Division*, 103, 211-224 (1977)

77-2 Pagni, P. J., Tien, C. L., Shih, T. M., and Yuen, W. W., "Excess Pyrolyzate Production by Cellular Plastics," *Final Report to the Products Research Committee*, February 1977.

77-3 Shih, T. M., and Pagni, P. J., "Analytic Incorporation of Probability Density Functions in Turbulent Flames," April 1977. Submitted to the *International Journal of Heat and Mass Transfer.*

77-4 Shih, T. M., and Pagni, P. J., "Wake Turbulent Flames," April 1977. Presented at the *National Heat Transfer Conference, August 15, 1977, Salt Lake City.*

77-5 Pitz, W. J., and Sawyer, R. F., "Deflection Mapping in the Study of Polymer Burning," April 1977. Presented at the *1977 Spring Meeting, Western States Section/The Combustion Institute, Seattle, Paper*, No. 77-21.

77-6 Shih, T. M., and Pagni, P. J., *Excess Pyrolyzate from Diffusion Flames*, June 1977.

77-7 Shih, T. M., and Pagni, P. J., "Laminar Mixed Mode Forced and Free Diffusion Flames," June 1977. Submitted to the *Journal of Heat Transfer.*

77-8 Iding, R., Bresler, B., and Nizamuddin, Z., *FIRES-II a Computer Program for the FIre REsponse of Structures-Reinforced Concrete Frames*, Revised Version, July 1977.

77-9 Wickstrom, U., *A Numerical Procedure for Calculating Temperature in Hollow Structures Exposed to Fire*, August 1977.

77-10 Sahota, M. S., and Pagni, P. J., " Heat and Mass Transfer in Structures Exposed to Fires," August 1977. Submitted to the *Journal of Heat and Mass Transfer.*

77-11 Shih, T. M., and Pagni, P. J., "Parametric Expansion Method Two-Point Boundary Value Problems," August 1977. Submitted to the *Journal of Computational Physics*.

77-12 Bard, S., Clow, K. H., and Pagni, P. J., "Combustion of Cellular Urethane," September 1977. Submitted to *Combustion Science & Technology.*

77-13 Felske, J. D., and Tien, C. L., "The Use of the Milne-Eddington Absorption Coefficient for Radiative Heat Transfer in Combustion Systems," August 1977. Published in *Journal of Heat Transfer*, 99, (1977)

77-14 Babrauskas, V., and Williamson, R. B., "Post Flashover Compartment Fires -- Basis of a Theoretical Model," October 1977. To be published in *Fire & Materials.*

77-15 Iding, R., and Bresler, B., *FIRES-T III a Computer Program for the FIre Response of Structures--Thermo Three Dimensional Version*, October 1977.

NIST-114
(REV. 6-93)
ADMAN 4.09

U.S. DEPARTMENT OF COMMERCE
NATIONAL INSTITUTE OF STANDARDS AND TECHNOLOGY

MANUSCRIPT REVIEW AND APPROVAL

(ERB USE ONLY)	
ERB CONTROL NUMBER	DIVISION
PUBLICATION REPORT NUMBER: NIST GCR 95-682	CATEGORY CODE
PUBLICATION DATE: June1996	NUMBER PRINTED PAGES

INSTRUCTIONS: ATTACH ORIGINAL OF THIS FORM TO ONE (1) COPY OF MANUSCRIPT AND SEND TO THE SECRETARY, APPROPRIATE EDITORIAL REVIEW BOARD

TITLE AND SUBTITLE (CITE IN FULL)

FIRES - T3 a Computer Program for the Fire Response of Structures -- Thermal (Three-Demensional Version)

CONTRACT OR GRANT NUMBER: NBS-G7-9006-10/77

TYPE OF REPORT AND/OR PERIOD COVERED: October 1977

AUTHOR(S) (LAST NAME, FIRST INITIAL, SECOND INITIAL)

Iding, R., Bresler, B., and Nizamuddin
Department of Civil Engineering
University of California, Berkeley, CA

PERFORMING ORGANIZATION (CHECK (X) ONE BOX)
- [ ] NIST/GAITHERSBURG
- [ ] NIST/BOULDER
- [ ] JILA/BOULDER

LABORATORY AND DIVISION NAMES (FIRST NIST AUTHOR ONLY)

SPONSORING ORGANIZATION NAME AND COMPLETE ADDRESS (STREET, CITY, STATE, ZIP)

U.S. Department of Commerce
National Instititute of Standards and Technology, Gaithersburg, MD 20899

and

National Science Foundation
Washington, DC

PROPOSED FOR NIST PUBLICATION
- [ ] JOURNAL OF RESEARCH (NIST JRES)
- [ ] J. PHYS. & CHEM. REF. DATA (JPCRD)
- [ ] HANDBOOK (NIST HB)
- [ ] SPECIAL PUBLICATION (NIST SP)
- [ ] TECHNICAL NOTE (NIST TN)
- [ ] MONOGRAPH (NIST MN)
- [ ] NATL. STD. REF. DATA SERIES (NIST NSRDS)
- [ ] FEDERAL INF. PROCESS. STDS. (NIST FIPS)
- [ ] LIST OF PUBLICATIONS (NIST LP)
- [ ] NIST INTERAGENCY/INTERNAL REPORT (NISTIR)
- [ ] LETTER CIRCULAR
- [ ] BUILDING SCIENCE SERIES
- [ ] PRODUCT STANDARDS
- [x] OTHER NIST-GCR

PROPOSED FOR NON-NIST PUBLICATION (CITE FULLY) [ ] U.S. [ ] FOREIGN

PUBLISHING MEDIUM
- [ ] PAPER
- [ ] CD-ROM
- [ ] DISKETTE (SPECIFY)
- [ ] OTHER (SPECIFY)

SUPPLEMENTARY NOTES

ABSTRACT (A 2000-CHARACTER OR LESS FACTUAL SUMMARY OF MOST SIGNIFICANT INFORMATION. IF DOCUMENT INCLUDES A SIGNIFICANT BIBLIOGRAPHY OR LITERATURE SURVEY, CITE IT HERE. SPELL OUT ACRONYMS ON FIRST REFERENCE.) (CONTINUE ON SEPARATE PAGE, IF NECESSARY.)

This report documents the computer program FIRES-T3 (Fire Response of Structures – Thermal – Three-Dimensional Version). The program evaluates the temperature distribution history of general three-dimensional solids or composites such as reinforced concrete subjected to fire environments. There are also options of two-dimensional and one-dimensional heat flow analyses. FIRES-T3 is based on a finite element formulation which considered the temperature dependence of thermal properties and the nonlinearities inherent in modeling the fire boundary condition. The finite element formulation, the idealization of the fire boundary condition, and the general numerical approach used in the program are discussed. Included in the report are appendices that provide input instructions for FIRES-T3, sample problems with listings of their input and output, and a complete Fortran listing of the computer program.

KEY WORDS (MAXIMUM OF 9; 28 CHARACTERS AND SPACES EACH; SEPARATE WITH SEMICOLONS; ALPHABETIC ORDER; CAPITALIZE ONLY PROPER NAMES)

computer modes; concrete slabs; fire models; heat transfer; steel structures; structural design

AVAILABILITY
- [x] UNLIMITED
- [ ] FOR OFFICIAL DISTRIBUTION - DO NOT RELEASE TO NTIS
- [ ] ORDER FROM SUPERINTENDENT OF DOCUMENTS, U.S. GPO, WASHINGTON, DC 20402
- [x] ORDER FROM NTIS, SPRINGFIELD, VA 22161

NOTE TO AUTHOR(S): IF YOU DO NOT WISH THIS MANUSCRIPT ANNOUNCED BEFORE PUBLICATION, PLEASE CHECK HERE. [ ]

WORDPERFECT