IN: Yang, J.C., et al., Editors, Solid Propellant Gas Generators: Proceedings of the 1995 Workshop, NISTIR 5766, June 28-29, 1995, 147-173 pp, 1995

SPECIES CONCENTRATION MEASUREMENTS

William M. Pitts
Building and Fire Research Laboratory
National Institute of Standards and Technology
Gaithersburg, MD 20899

Coworkers: George Mulholland, Brett Breuel, Dick Harris, Mike Glover, Darren Lowe, Steven Chung, Rik Johnsson, Yonas Makai (PL), David Hess (CSTL)

Solid Propellant Gas Generator Workshop
NIST, June 28, 1995

NIST

REAL-TIME CONCENTRATION MEASUREMENT

PROJECT OBJECTIVE

The objective of this effort is to evaluate possible methods for real-time measurements of concentrations of alternative fire fighting agents for dry-bay and nacelle fire applications. If one or more feasible approaches are identified early in the investigation, a demonstration system will be developed for characterization under actual test situations.

MAJOR TASKS

1. Review of the Concentration Measurement Literature
2. Evaluate and Test Instrumentation Developed with Air Force Funding
3. Evaluate and Test Hot-Film Probes
4. Development of Operating Procedures (Optional)

NIST

OUTLINE

1. Introduction
2. Fire Extinguishing Agent Sensor (FEAS)
3. Differential Infrared Rapid Agent Sensor (DIRRACS)
4. Combined Aspirated Hot-Film/Cold-Wire Probe
5. Statham Analyzer and Halonyzer
6. Literature Review

NIST

TIME RESOLUTION REQUIREMENTS

- Dry-bay application requires fire extinguishment in tens of milliseconds.

- In order to characterize concentration behavior must be able to make real-time measurements significantly faster than the event.

- A temporal resolution of one millisecond (1 kHz data rate) was chosen as design goal.

- Note that the required temporal resolution places constraints on spatial resolution.

- Compare current requirement with temporal response of existing Statham and Halonyzer instruments (0.25 s).

NIST

John Brown Associates Fire Extinguishing Agent Sensor (FEAS)

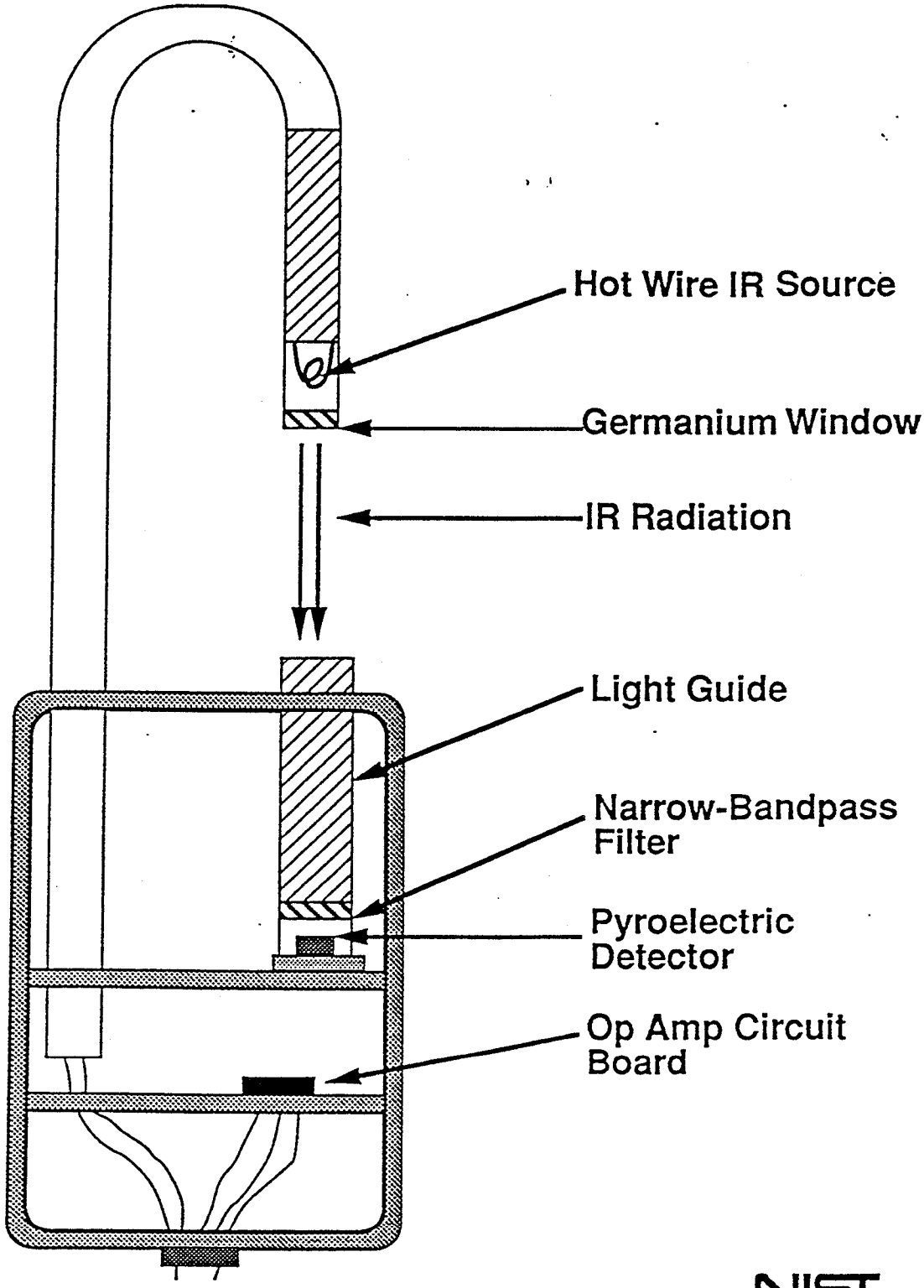

NIST

FREQUENCY RESPONSE OF THE FEAS

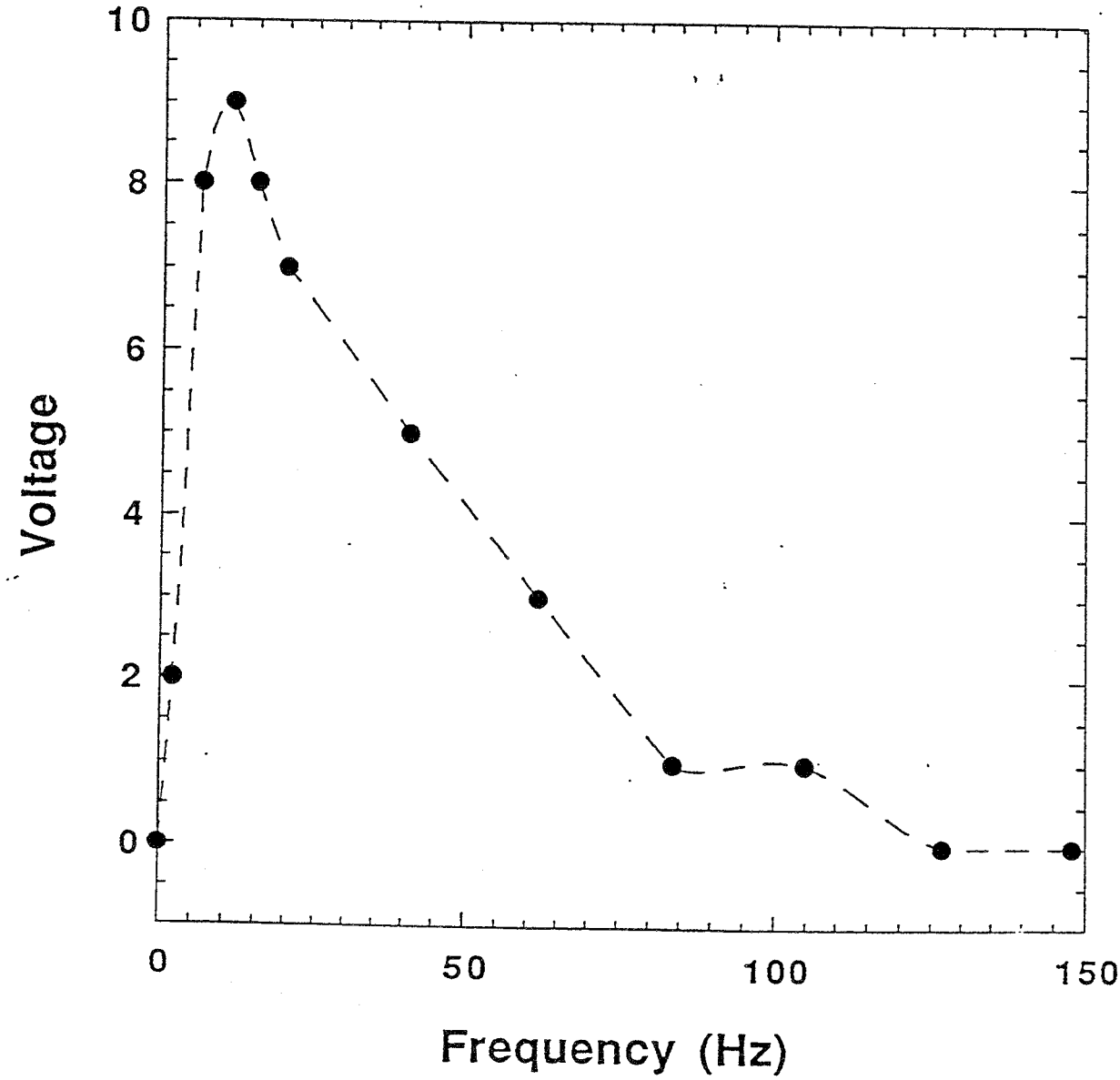

NIST

SCHEMATIC FOR THE DIFFERENTIAL INFRARED RAPID AGENT CONCENTRATION SENSOR (DIRRACS)

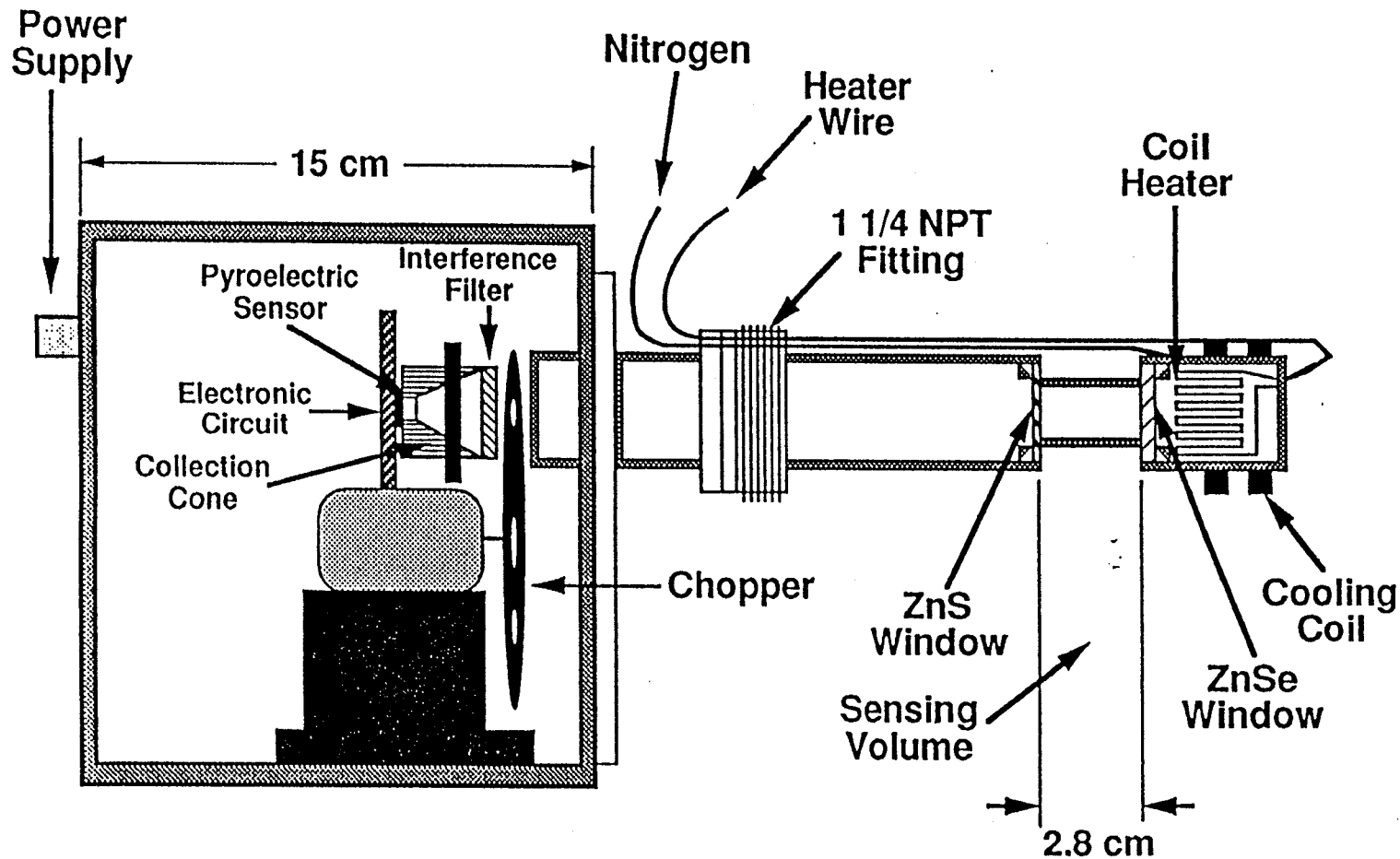

NIST

DIRRACS OUTPUT VOLTAGE

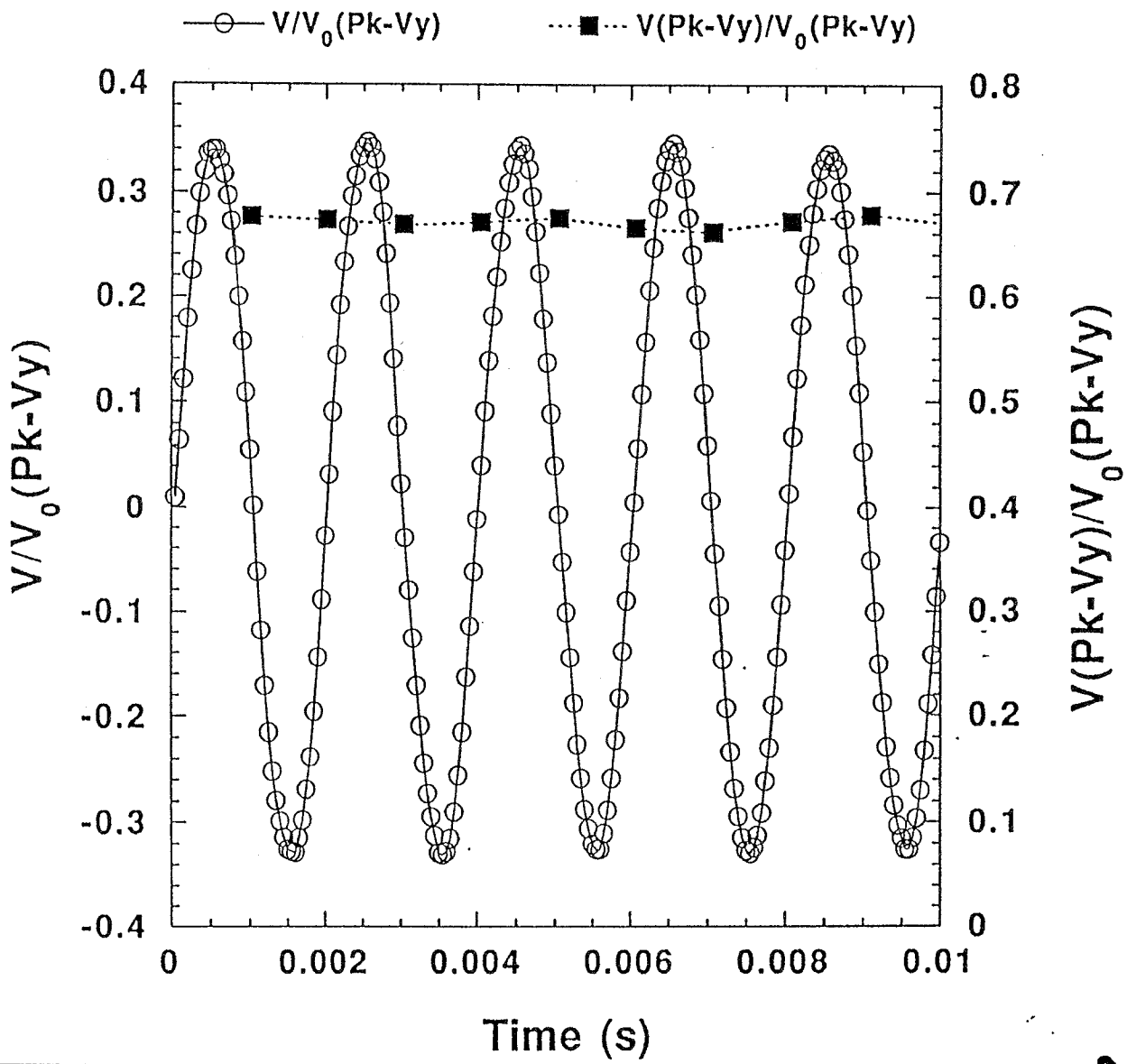

NIST

DIRRACS CALIBRATION

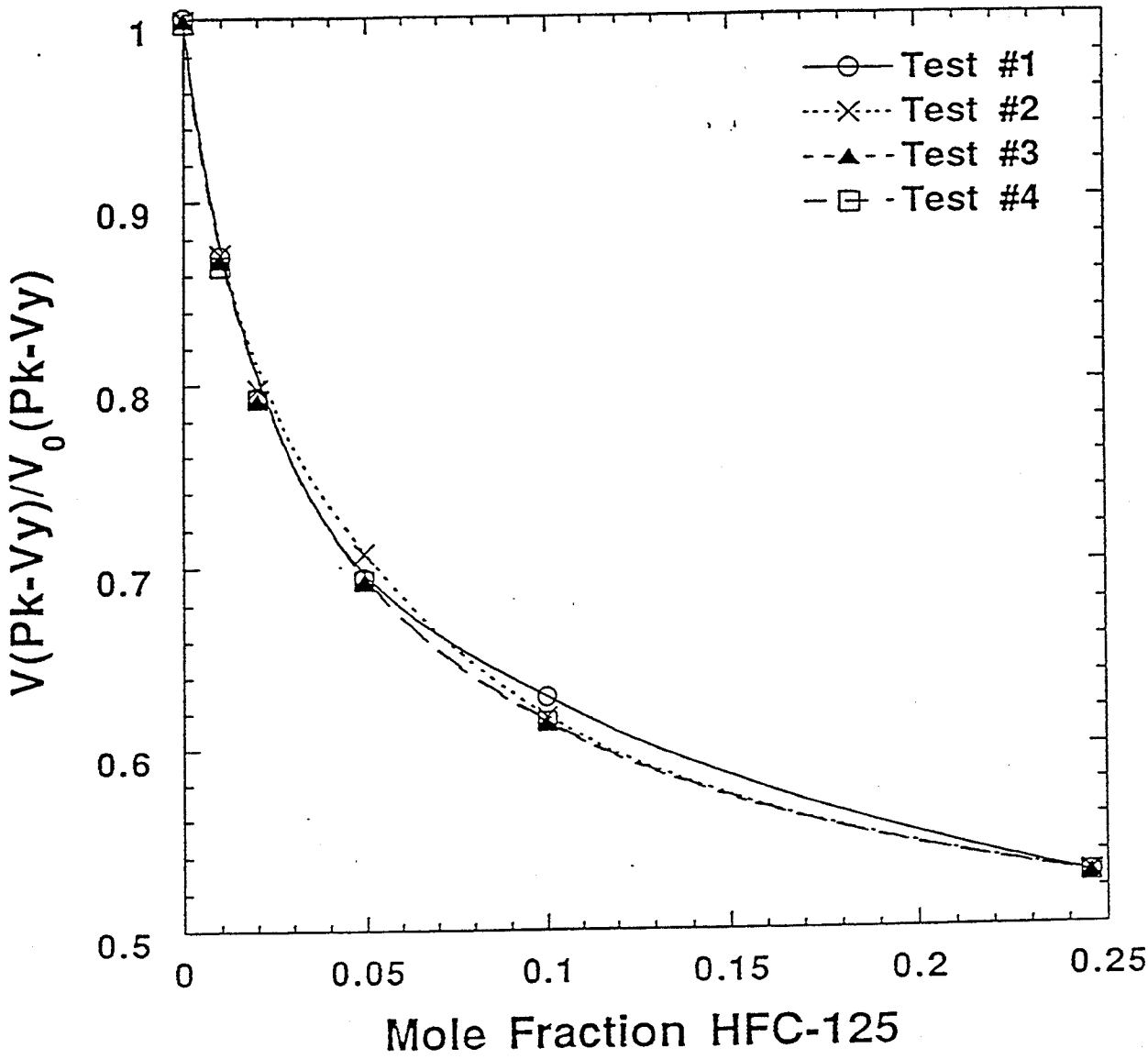

NIST

WRIGHT-PATTERSON DRY-BAY TEST FACILITY

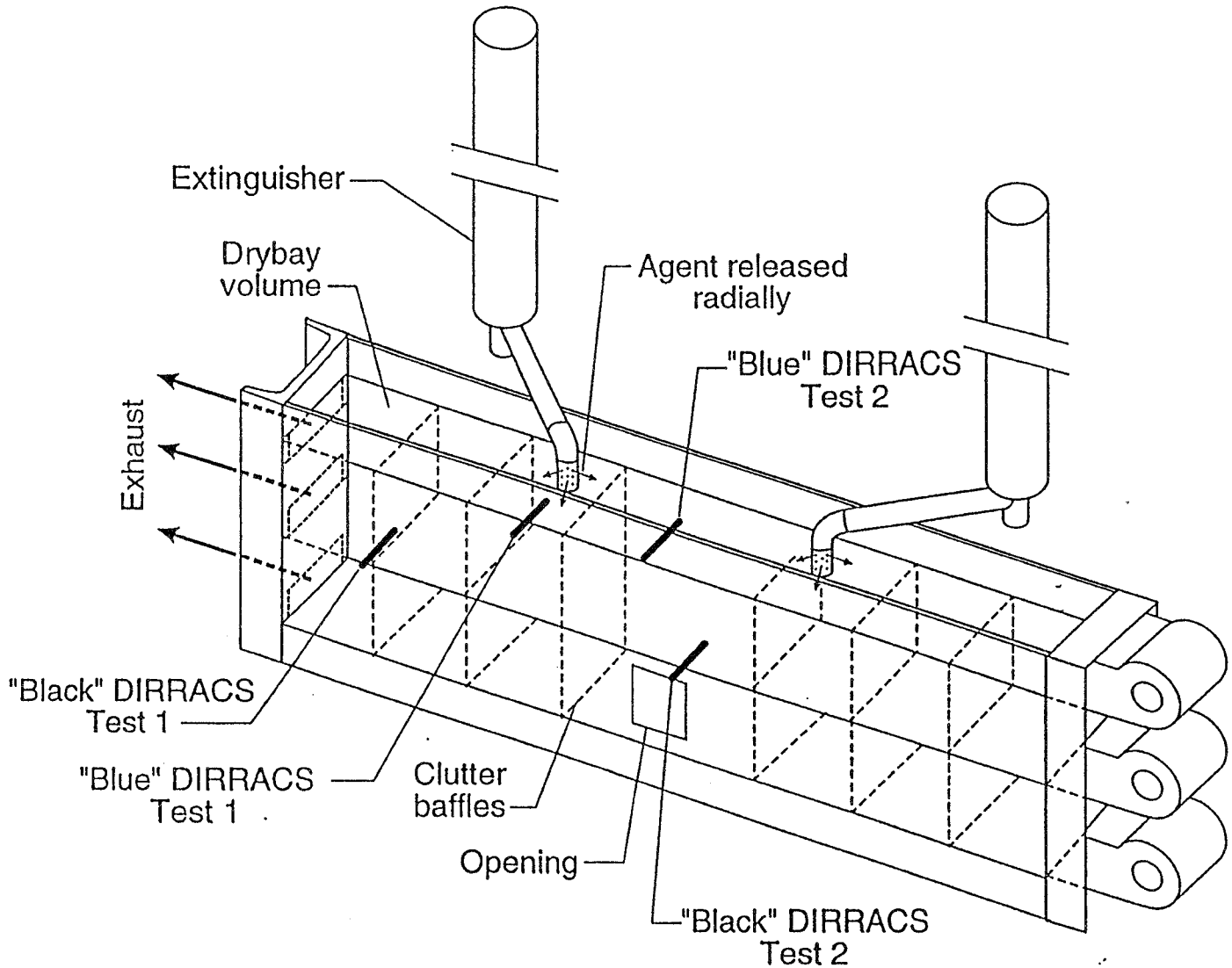

NIST

CONCENTRATION MEASUREMENTS DURING AGENT RELEASE INTO WRIGHT-PATTERSON AFB DRY-BAY FACILITY

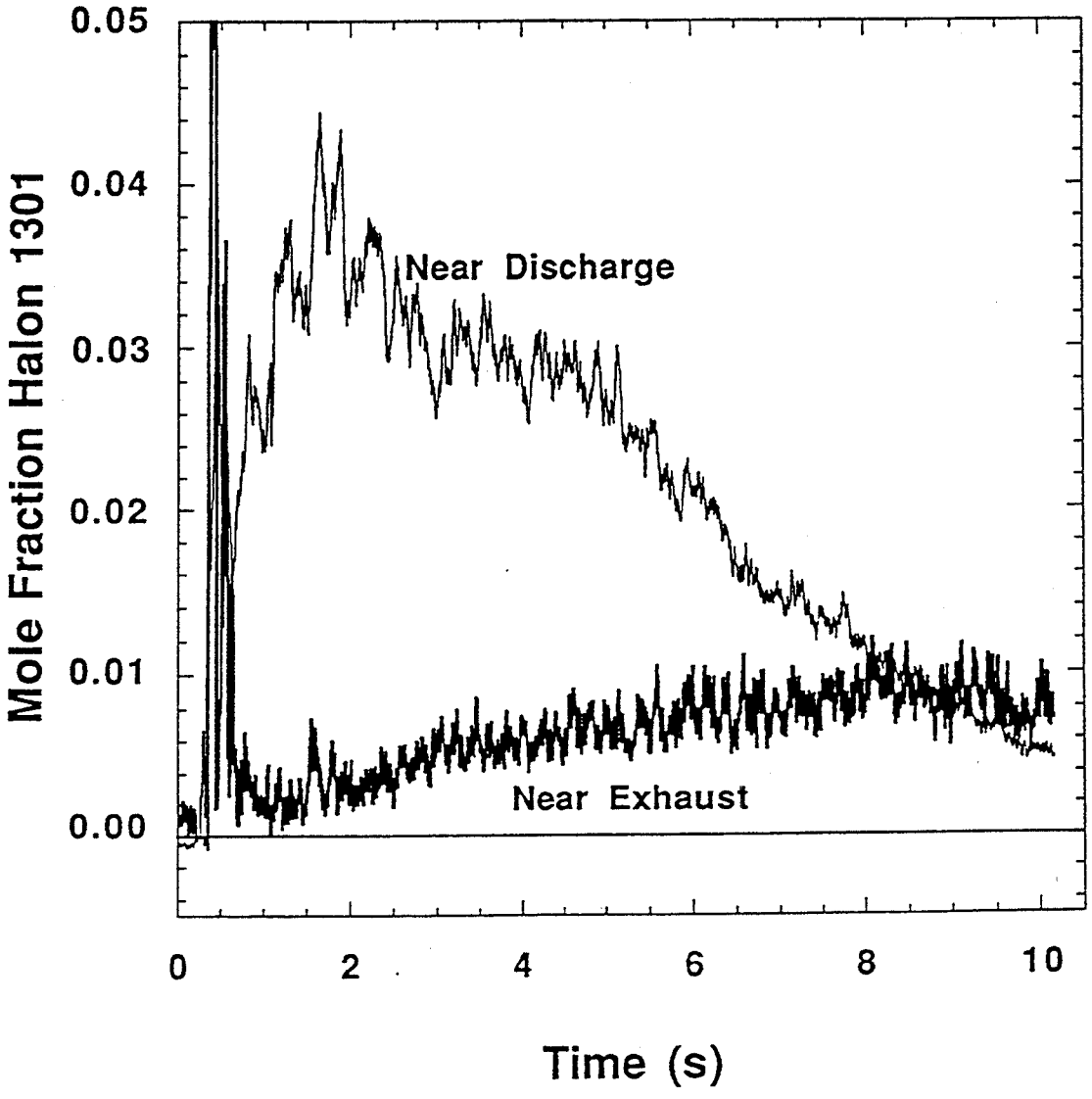

NIST

DIRRACS CONCENTRATION MEASUREMENT IN TURBULENT SPRAY-FLAME BURNER FACILITY

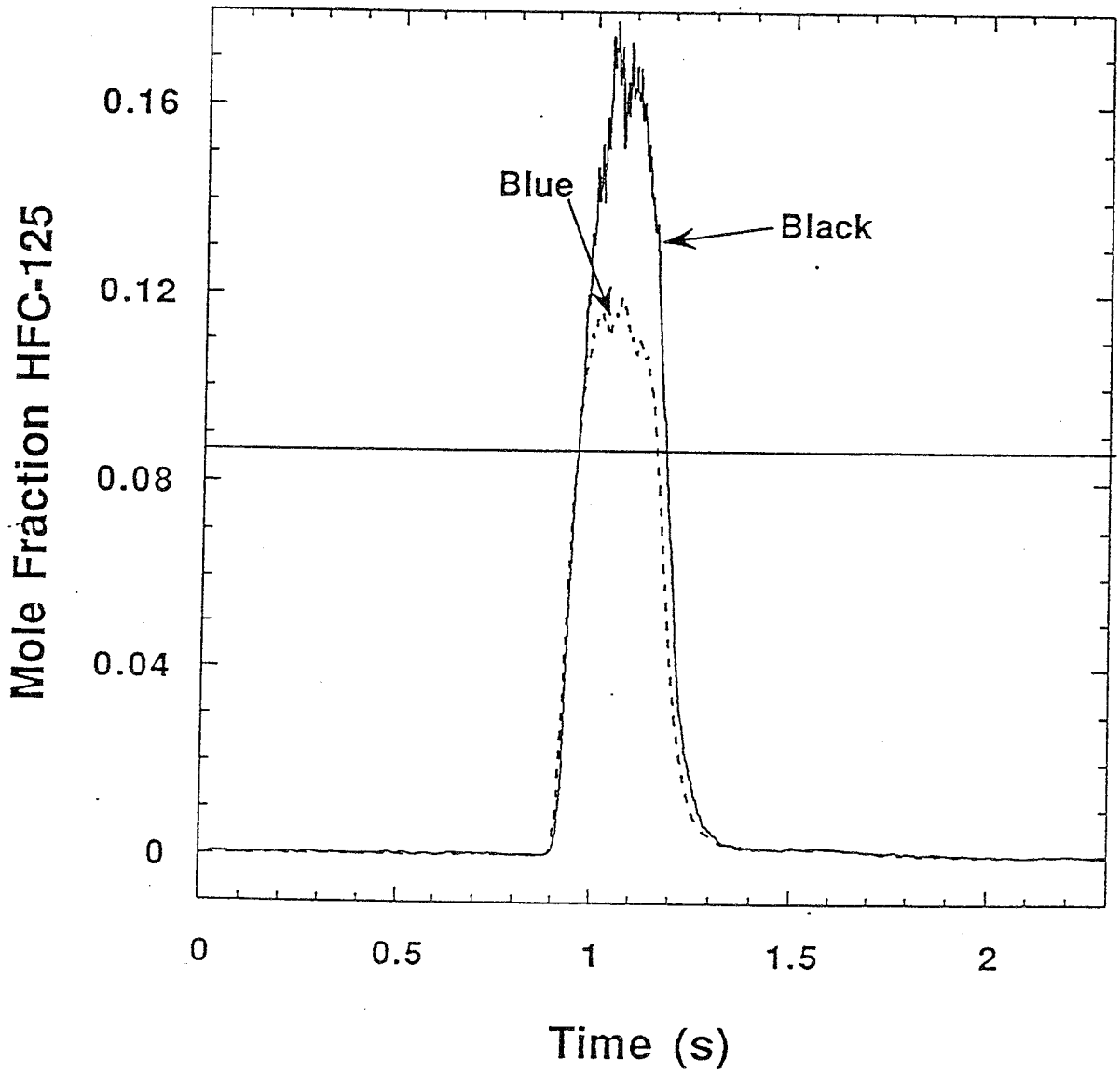

NIST

CURRENT STATUS OF DIRRACS

- Feasibility demonstrated.
- Sensitivity to flow velocity must be eliminated.
- Reduction of sampling volume is desirable.

NIST

COMBINED ASPIRATED HOT-FILM/ COLD-WIRE CONCENTRATION PROBE

- Hot-film anemometer measures heat loss from heated cylinder, normally used for velocity measurement, but also responds to concentration and temperature variations.
- Volume flow rate through a choked orifice only depends on upstream pressure, stagnation temperature, and gas molecular weight.
- Placing hot-film in aspirated tube containing choked orifice eliminates most sensitivity to velocity and creates probe sensitive to concentration and temperature changes.
- Utilize a cold wire as a resistance thermometer to record temperature.
- Proper calibration of the combined aspirated hot-film/cold wire probe allows concentration to be measured in binary mixtures.
- Sampling volume $\approx 1\ mm^3$, temporal resolution $\approx$ 1 ms

NIST

COMBINED ASPIRATED HOT-FILM/COLD-WIRE CONCENTRATION PROBE (TSI MODEL 1440S)

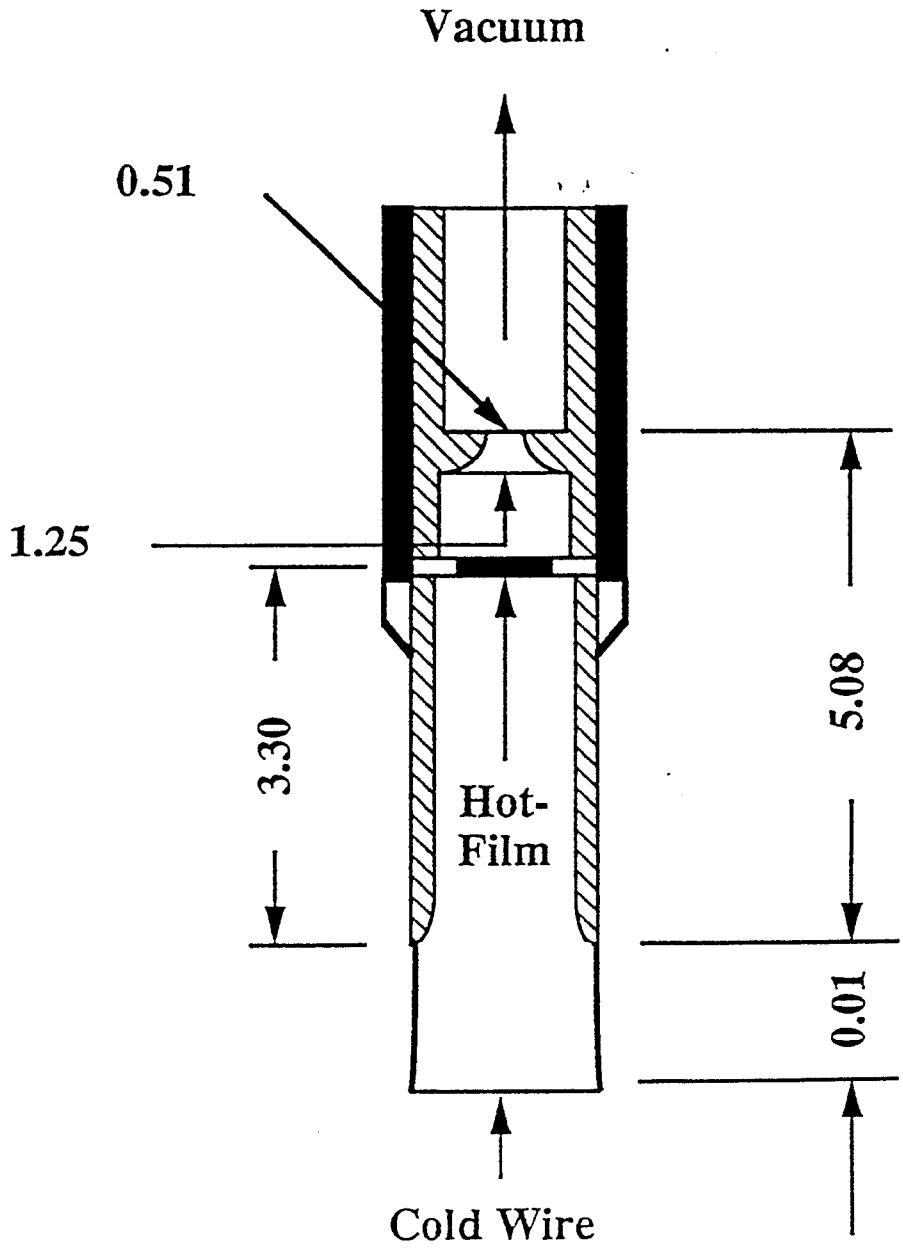

* All Measurements are in mm

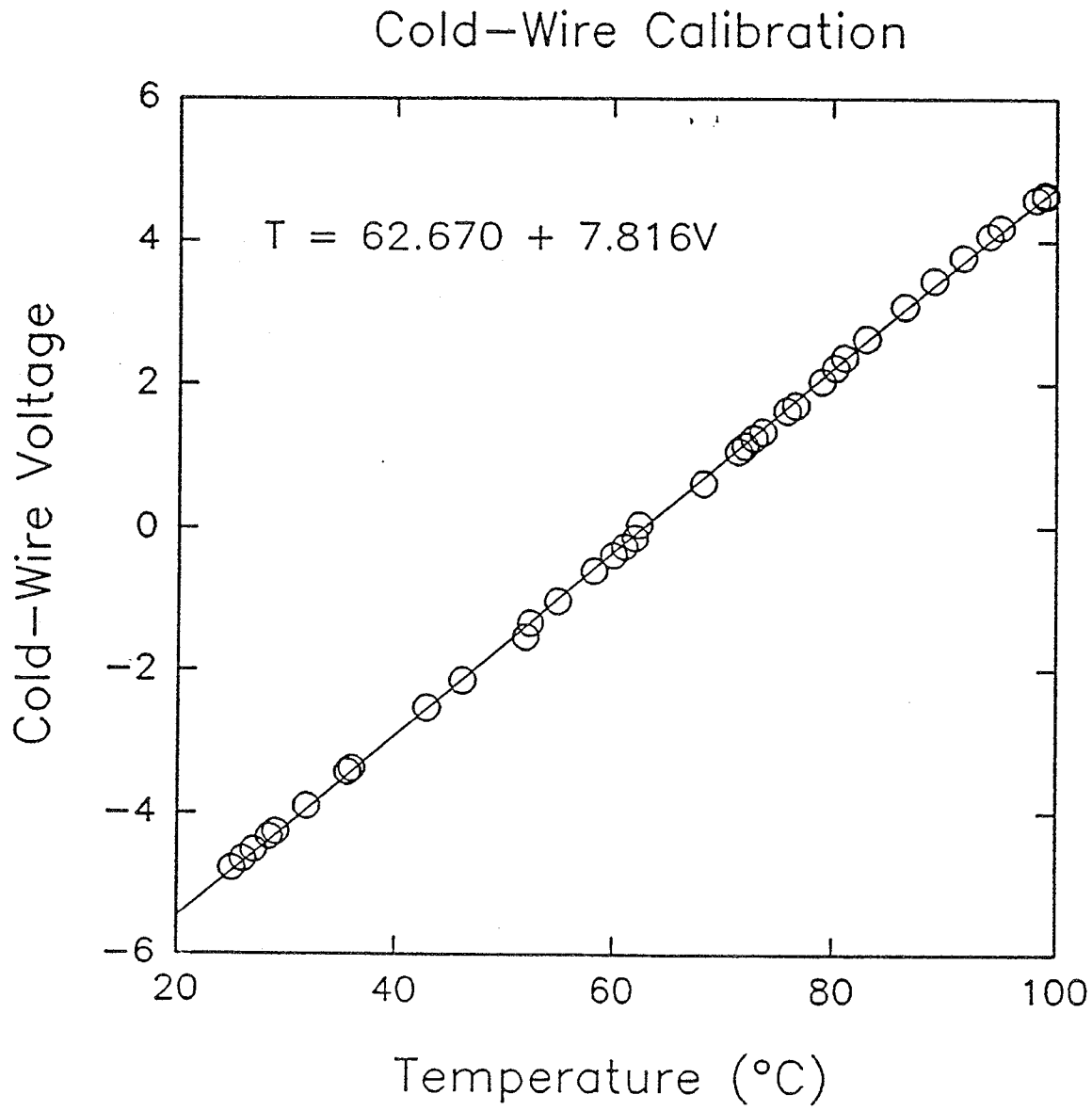
Cold–Wire Calibration
T = 62.670 + 7.816V
Cold–Wire Voltage
6
4
2
0
−2
−4
−6
20
40
60
80
100
Temperature (°C)

NIST

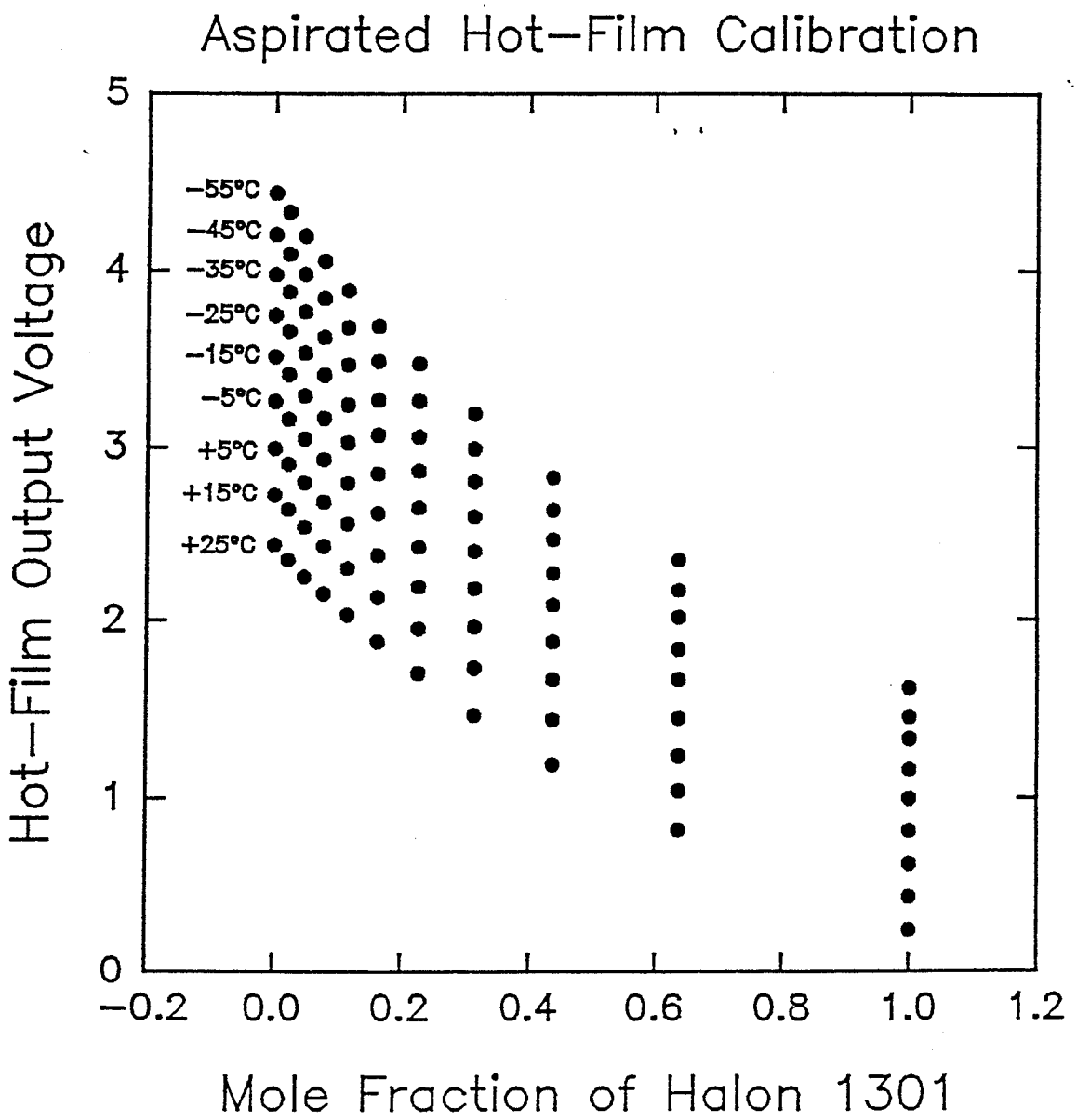
Aspirated Hot–Film Calibration
Hot–Film Output Voltage
Mole Fraction of Halon 1301
–55°C
–45°C
–35°C
–25°C
–15°C
–5°C
+5°C
+15°C
+25°C
5
4
3
2
1
0
–0.2
0.0
0.2
0.4
0.6
0.8
1.0
1.2

NIST

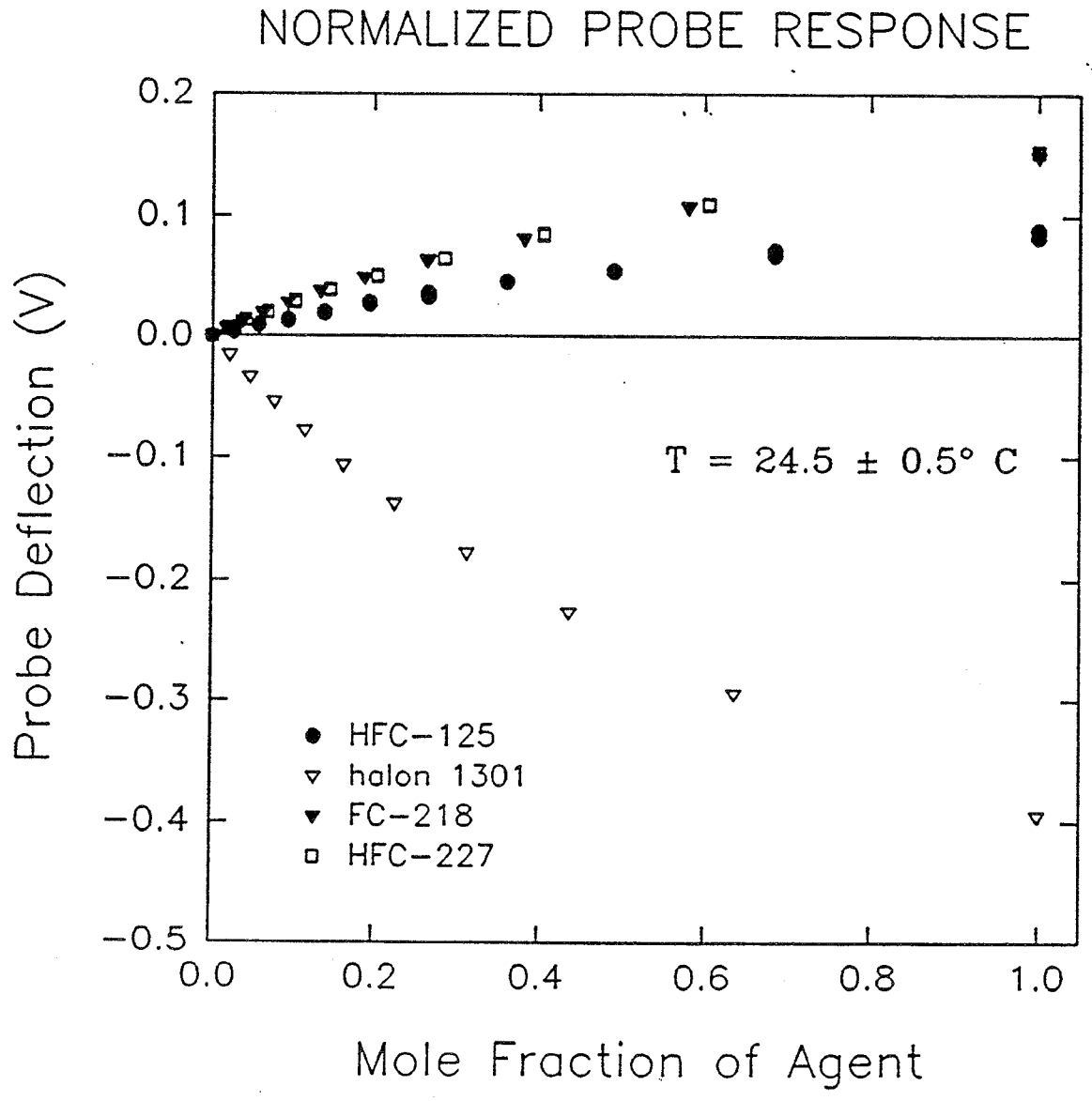
NORMALIZED PROBE RESPONSE
Probe Deflection (V)
0.2
0.1
0.0
−0.1
−0.2
−0.3
−0.4
−0.5
0.0
0.2
0.4
0.6
0.8
1.0
Mole Fraction of Agent
T = 24.5 ± 0.5° C
HFC−125
halon 1301
FC−218
HFC−227

NIST

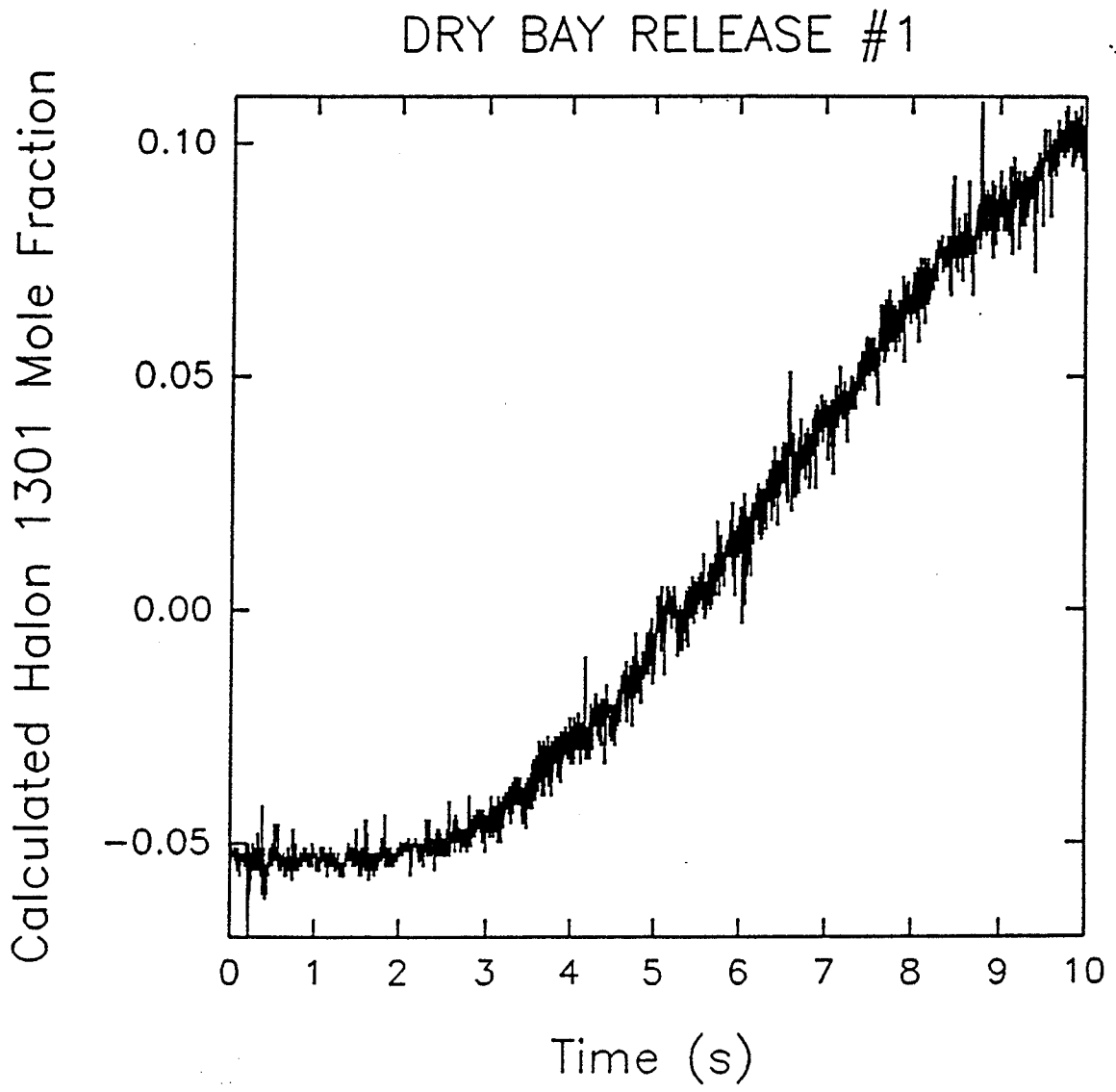
DRY BAY RELEASE #1
Calculated Halon 1301 Mole Fraction
0.10
0.05
0.00
−0.05
0
1
2
3
4
5
6
7
8
9
10
Time (s)

NIST

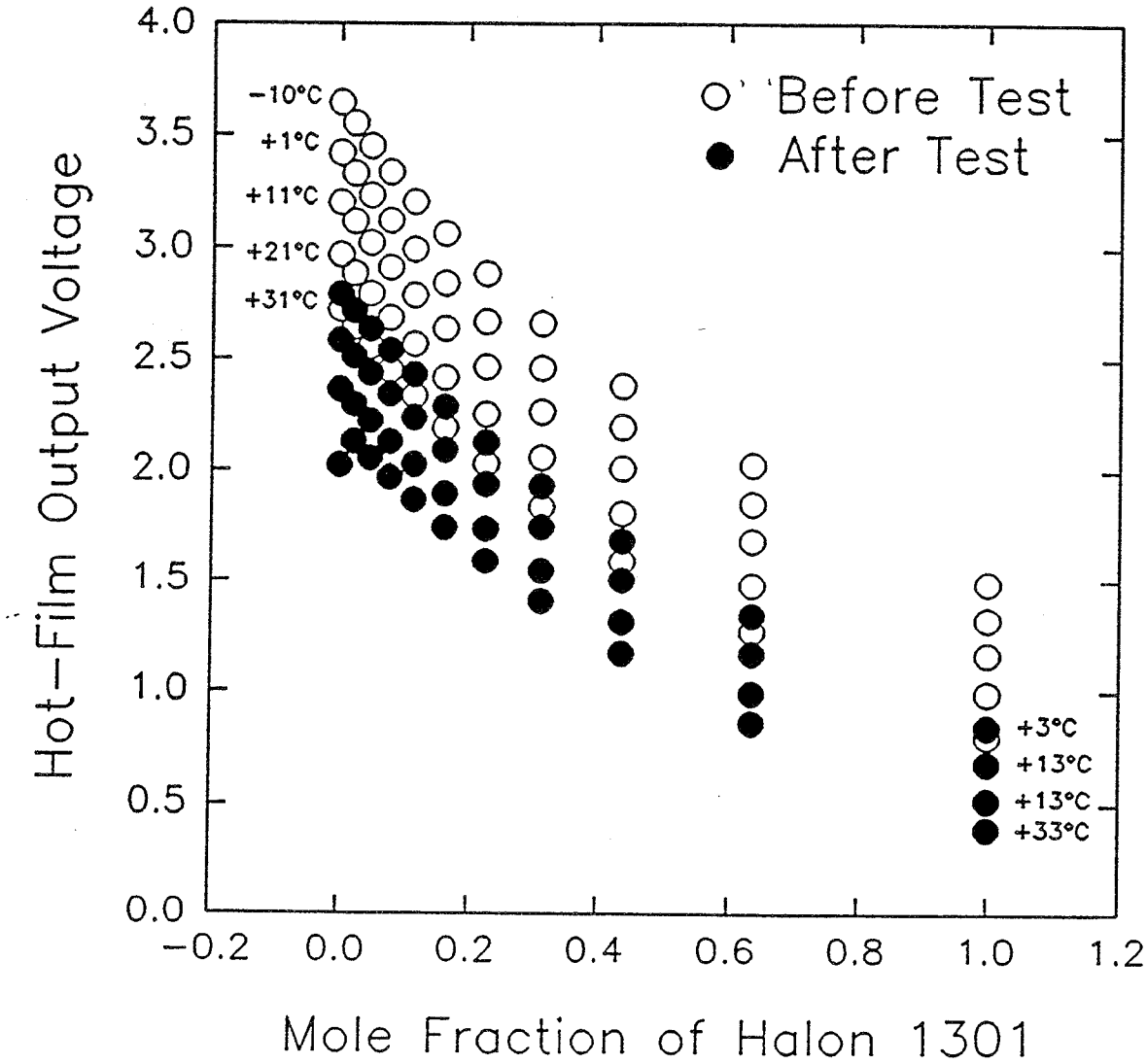
Before Test
After Test
−10°C
+1°C
+11°C
+21°C
+31°C
+3°C
+13°C
+13°C
+33°C
Hot−Film Output Voltage
Mole Fraction of Halon 1301
4.0
3.5
3.0
2.5
2.0
1.5
1.0
0.5
0.0
−0.2
0.0
0.2
0.4
0.6
0.8
1.0
1.2

NIST

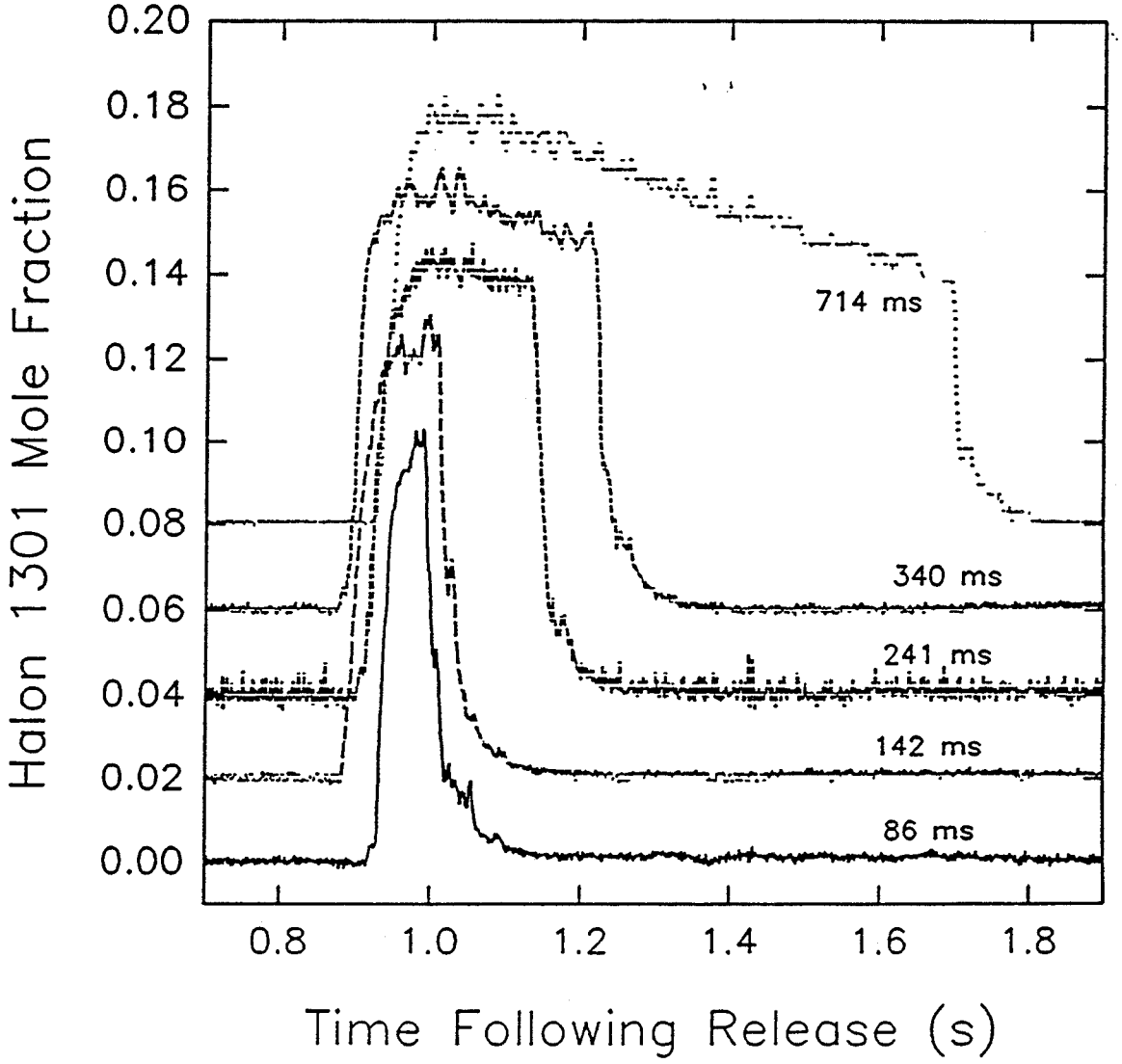
0.20
0.18
0.16
0.14
0.12
0.10
0.08
0.06
0.04
0.02
0.00
Halon 1301 Mole Fraction
714 ms
340 ms
241 ms
142 ms
86 ms
0.8
1.0
1.2
1.4
1.6
1.8
Time Following Release (s)

NIST

CURRENT STATUS OF COMBINED ASPIRATED HOT-FILM/COLD-WIRE PROBE

- Probe is subject to clogging during actual dry-bay tests (attributed to use of squib charge).
- Probe has an unexpected sensitivity to velocity fluctuations.
- Probe is capable of accurate measurements of agent concentration with high temporal and spatial resolution.
- Probe sensitivity depends on gas pairs considered.
- Additional development <u>might</u> lead to a probe which could be used in dry-bay and nacelle test facilities.

NIST

SCHEMATIC FOR A "GAS ANALYSIS APPARATUS" REPRODUCED FROM THE UNITED STATES PATENT OF YANIKOSKI (1952)

DEC 2 10 34 '69

Feb. 26, 1952 F. F. YANIKOSKI 2,586,899

GAS ANALYSIS APPARATUS

Filed Oct. 18, 1946

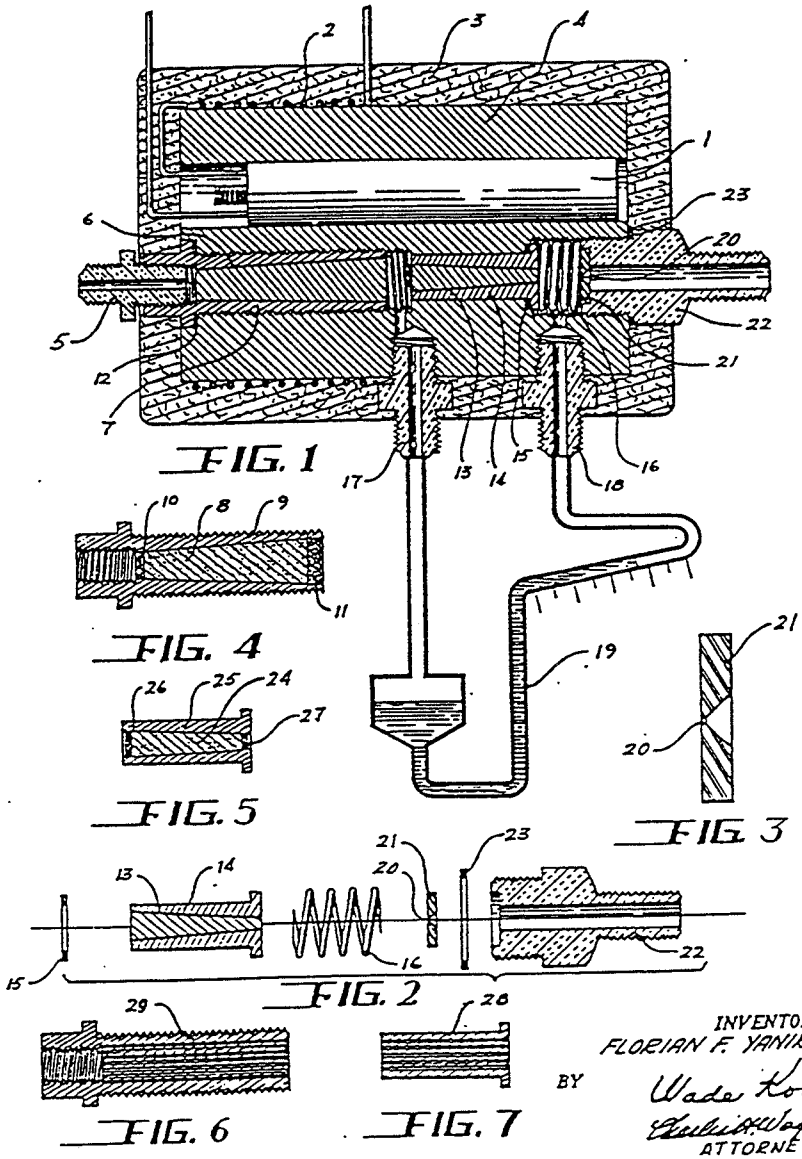

NIST

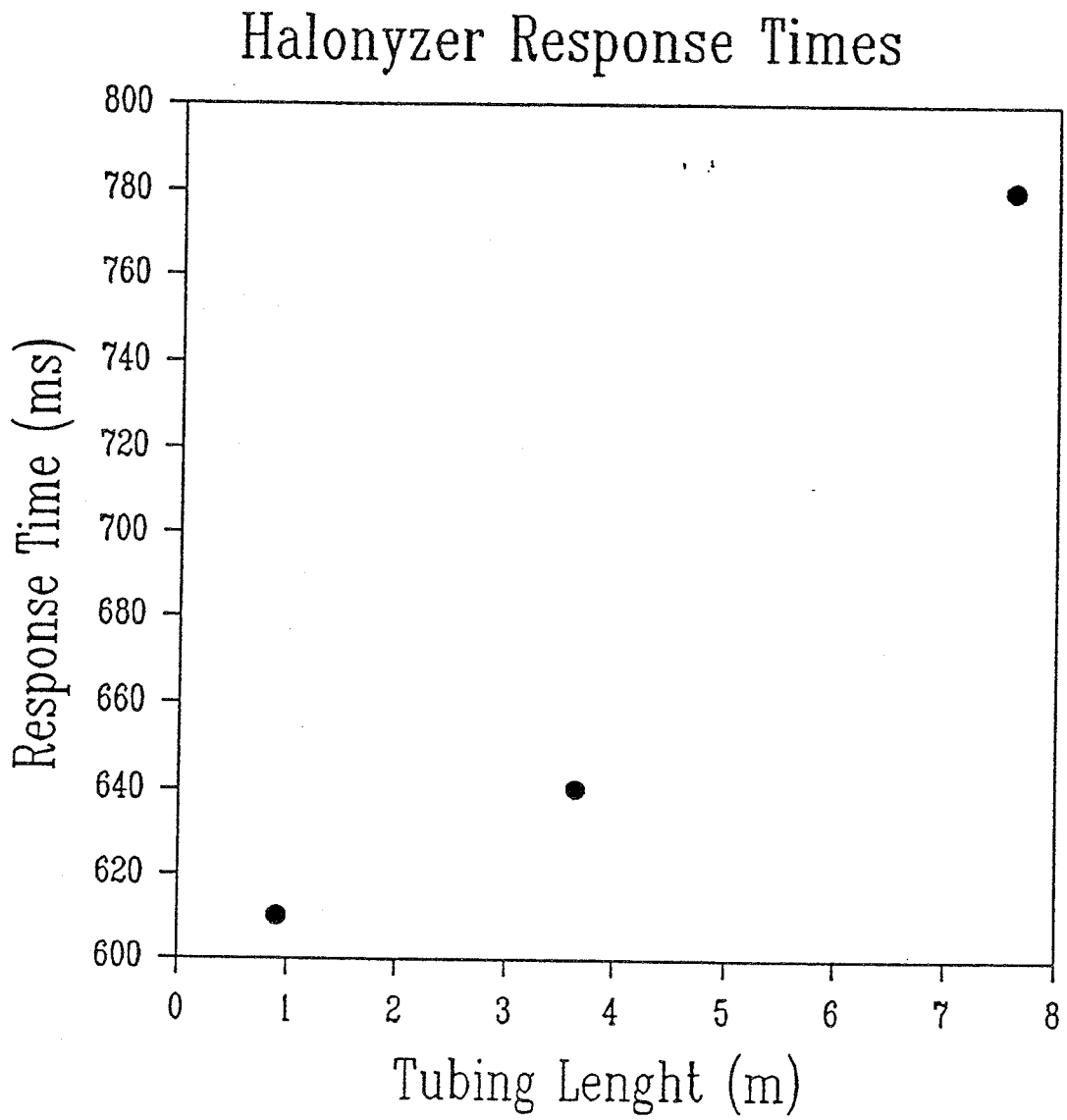

Response times for a Halonyzer concentration reading to change from 0 to 95% for a step increase in halon 1301 mole fraction to 100% as a function of sampling tube length. Data provided by W. Meserve and D. Van Ostrand of Pacific Scientific.

11.5 Literature Search For Additional Diagnostics for High-Speed Alternative-Agent Concentration Measurement

11.5.1 Introduction

11.5.2 "Standard" Chemical-Analysis Techniques

- 11.5.2.1 Gas-Solid and Gas-Liquid Chromatography.
- 11.5.2.2 Mass Spectrometry.
- 11.5.2.3 Standard Optical Absorption Techniques.

11.5.3 Fiber-Optic-Based Measurements of Concentration

- 11.5.3.1 Introduction To Fiber Optics.
- 11.5.3.2 Spatially Resolved Absorption Concentration Measurements Using Fiber Optics.
- 11.5.3.3 Other Fiber-Optic-Based Concentration Measurement Approaches.

11.5.4 Additional Optical-Based Techniques

- 11.5.4.1 Raman Spectroscopy.
- 11.5.4.2 Coherent Anti-Stokes Raman Spectroscopy (CARS).
- 11.5.4.3 Rayleigh Light Scattering.
- 11.5.4.4 Fluorescence Concentration Measurements.
- 11.5.4.5 Mie Scattering Concentration Measurements.
- 11.5.4.6 Specialized Concentration Measurements Based on Optical Absorption.
- 11.5.4.7 Optical Speckle Technique.
- 11.5.4.8 Miniature Mach-Zehnder Interferometer.

11.5.5 Acoustic Absorption

TECHNIQUES RECOMMENDED FOR CONSIDERATION BASED ON LITERATURE REVIEW

- Time-resolved mass spectrometry.
- Mid-infrared absorption used in conjunction with fiber optics for spatial resolution.
- Near-infrared absorption used in conjunction with fiber optics for spatial resolution.

NIST