VALIDATION OF A TURBULENT SPRAY FLAME FACILITY FOR THE ASSESSMENT OF HALON ALTERNATIVES[1]

W. Grosshandler, C. Presser, and D. Lowe
National Institute of Standards and Technology
Gaithersburg, MD 20899

INTRODUCTION

The work discussed in this paper is part of a larger effort at NIST focused on finding an alternative to halon 1301 for application to aircraft engine nacelle and dry bay in-flight fire protection. Alternative chemical compounds are sought which will perform similarly to halon 1301, and which do not create unacceptable safety, environmental, or systems compatibility problems.

A cup burner, an opposed flow diffusion flame, a turbulent spray flame, and a deflagration/detonation tube are being used to rank the relative combustion suppression effectiveness of the following agents: R-32 (CH_2F_2), R-32/R-125 (CH_2F_2/CHF_2CF_3), HFC-227 (C_3HF_7), R-22(CHF_2Cl), HFC-134a (CH_2FCF_3), FC-116 (C_2F_6), HCFC-124 ($CHFClCF_3$), R-125 (CHF_2CF_3), FC-218 (C_3F_8), FC-31-10 (C_4F_{10}), and FC-318 (cyclo-C_4F_8). Table 1 lists the fuels and agents to be evaluated and the experimental variables for each configuration.

The cup burner has been used previously to measure the critical flow of gaseous suppressant needed to extinguish a low velocity diffusion flame and has been the basis for ranking the relative effectiveness of various chemicals (*e.g.*, Sheinson *et al.*, 1989; Booth *et al.*, 1973). The agent concentration needed to extinguish a diffusion flame stabilized between counter-flowing streams of oxidizer and a vaporizing liquid fuel is being measured following the technique developed by Seshadri (1977). Unlike the cup burner, the effect of the flow field (strain rate) on the extinction process is an independently controlled parameter in the opposed-flow diffusion flame (OFDF). The speed of an accelerating turbulent flame near the detonation limit can reach magnitudes three orders higher than that of a laminar flame. A detonation tube based upon the design of Peraldi *et al.* (1986) is being used to vary the wave from a high-speed turbulent flame at lean conditions to a quasi-detonation at the stoichiometric point. A characteristic residence time for combustion in these three experiments can be estimated from the size of the respective reaction zones and flow velocities, which vary between 5 to 100 ms in the OFDF and cup burner, and 5 to 50 μs in the detonation tube. The turbulent spray flame discussed in this paper is designed to cover intermediate residence times and a more realistic flow field.

---

[1]Sponsored by the U.S. Air Force, Wright Patterson AFB, under the direction of M. Bennett, Flight Dynamics Laboratory, Vehicle Subsystems Division, Survivability Enhancement Branch, with Lt. K. Lee project manager.

Table 1. Flame Extinction Experiments

1. Cup Burner Diffusion Flame Characteristic time: 100 ms Agents: 11 listed, plus sodium bicarbonate	Fuels: C_7H_{16}, JP5, JP8, hydr. fluid 5606, 83282 Variables: agent concentration
2. Opposed-flow Diffusion Flame Characteristic time: 5 to 100 ms Agents: 11 listed, plus sodium bicarbonate	Fuels: heptane, JP8 Variables: strain rate, concentration
3. Turbulent spray flame Characteristic time: 1 to 10 ms Agents: 11 listed, plus sodium bicarbonate	Fuels: heptane, JP8, hydr. fluid 5606 Variables: temperature, velocity, agent concentration, injection period
4. Premixed Deflagration/Detonation wave Characteristic time: 5 to 50 μs Agents: 11 listed	Fuel: ethene Variables: agent concentration, fuel/air ratio

TURBULENT SPRAY BURNER

An engine nacelle fire is typically a turbulent diffusion flame stabilized behind an obstruction in a high speed air flow. Jet fuel, either as a spray or pre-vaporized, is the most likely supply of energy to the fire. Extinguishment occurs when a critical level of agent is mixed with the air upstream, and is transported to the flame where it can be entrained into the primary reaction zone. The process is affected by the turbulence intensity, velocity of the flow, and system temperature, as well as the agent concentration and properties.

A coaxial turbulent burner is used to simulate an idealized engine nacelle fire. The fuel, JP-8, is injected along the centerline through a pressure-jet nozzle that forms a 45° solid-cone spray. The nozzle is rated at 1.89 l/hr when the gauge pressure is 687 kPa. Air co-flows around the nozzle passage within an annular region which has an outer diameter of 50 mm. The nozzle is recessed about 80 mm from the exit of the annular casing. The flame, which is horizontal and easily viewed from the exit plane, is stabilized on a 35 mm diameter steel disk attached to the nozzle body. Figure 1 presents a cross-sectional view of the burner. The air flow is monitored with a critical orifice meter, yielding mean cold flow velocities up to 33 m/s. The inlet temperature of the air can be varied between ambient and 150 K using an electrical heater system.

The gaseous agents are injected impulsively into the air stream and dispersed uniformly across

the tube before they reach the flame. Prior to an experiment, the agent is transferred to and maintained as a gas in an evacuated one liter chamber at a gauge pressure between 39 and 680 kPa. At the desired moment, computer controlled solenoid valves are opened for the preselected amount of time (1 to 700 ms) and the agent flows into the air stream. The flow is measured by the pressure drop across a sharp-edge orifice plate and the overall pressure change in the vessel. A schematic of the injection system is shown in Fig. 2. Uniform dispersion across the combustion chamber is achieved by passing the agent/air mixture through screens before it encounters the stabilized spray flame.

CHARACTERIZATION OF FACILITY

The air and fuel flows were varied to ascertain how the flame stability was affected by the operating conditions. The fuel pressure was fixed at 687 ± 10 kPa (corresponding to a mass flow rate of around 0.45 g/s). The spray was ignited with a propane torch with a minimum amount of air flow. The flame extended well beyond the exit of the tube and was highly luminous under these conditions. As air flow increased, the flame attached itself to the stabilizing disk and the plume length decreased until the flame was stationed entirely within the tube passage. At high air flows no visible radiation was observed beyond the exit plane, although the flame itself maintained some luminosity. A moderate amount of soot formed on the nozzle face in a matter of minutes. A stable flame was sustained until blowout occurred at an air flow of 73 g/s. The average inlet velocity across the air duct was 33 m/s at this mass flow, which translates to a characteristic time in the reaction zone of about 1 ms.

The blowout experiment was repeated for fuel nozzle pressures 25% higher and lower. The reduced pressure resulted in an equivalent decrease in the amount of air necessary to extinguish the flame. Increasing the fuel flow had no appreciable affect on the blowout limit. Increasing the air temperature to 150°C yielded a blowout velocity which was about the same, but a mass flux which was 30% lower. This is unexpected since higher temperatures normally stabilize the flow. The explanation may lie in a secondary effect which the higher temperature may have on the structure of the fuel spray. The operating conditions chosen for baseline measurements were a fuel line pressure of 687 kPa (0.45 g/s), and an ambient air flow of 33 g/s. This produces a 19 kW flame with an overall equivalence ratio of about 0.18.

Under idealized conditions (incompressible flow, massless valves, no pressure losses), the injection system is designed to deliver a square-wave pulse of agent to the burner for the amount of time programmed by the computer control. The actual flow deviated substantially from this scenario. There is about a 15 ms delay between when the solenoid is triggered and the flow of the agent actually begins.

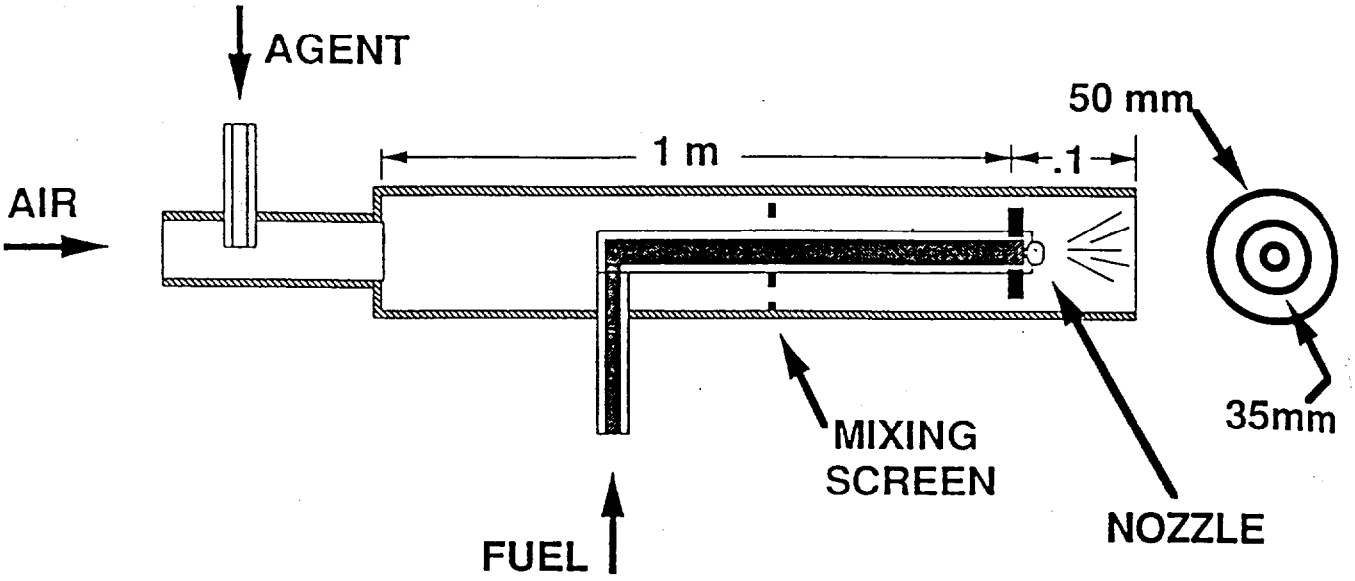

Figure 1. Cross-sectional view of turbulent spray burner

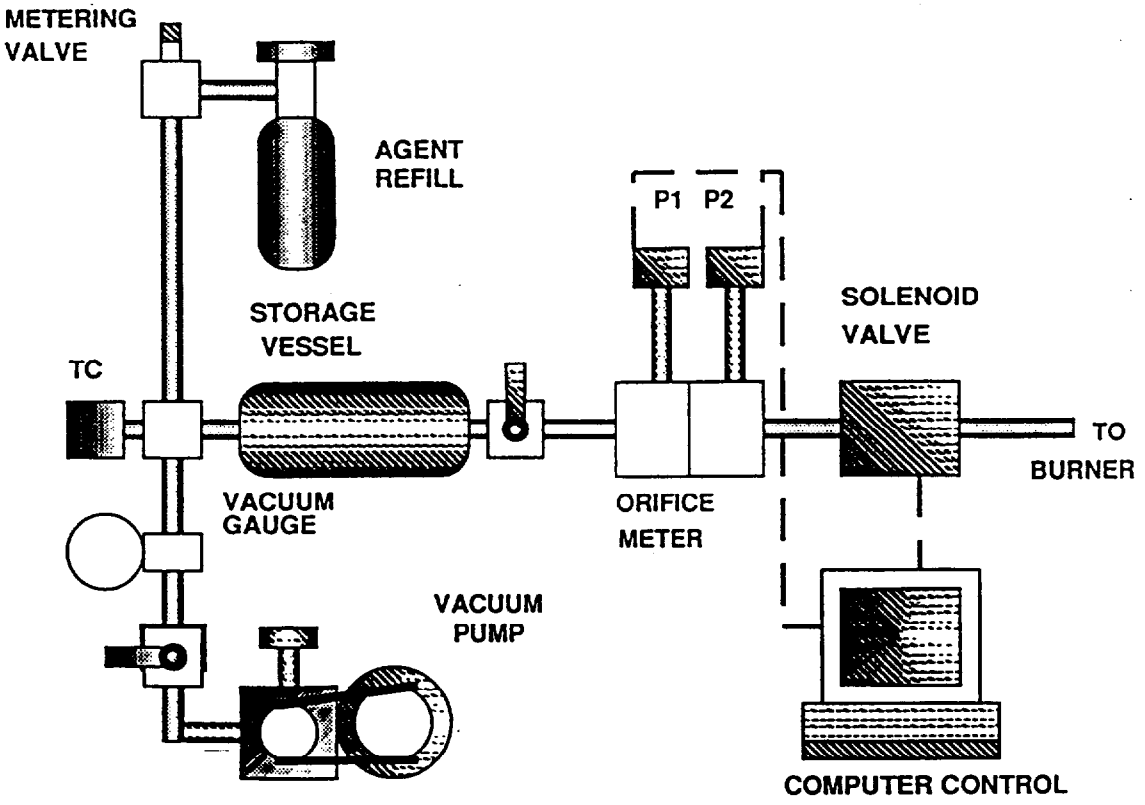

Figure 2. Schematic of gaseous agent injection system

When the valve begins to close, pressure waves are created which reverberate in the injection system at the acoustic velocity, causing the flow rate to modulate.

The mass of agent injected into the burner is determined from the total change in pressure over the entire injection period using the ideal gas equation of state. The initial temperature is measured, and the final temperature is determined by assuming the expansion occurs isentropically. The uncertainty in the total mass calculated is estimated to be 10%.

The pressure data are collected at a rate of 500 Hz, with the initial and final conditions found from the average of 200 points measured 0.2 s prior to the release of the agent, and about 0.5 s later, when the solenoid valves have fully closed. The system was checked using air compressed to 687 kPa by varying the time for the valves to be open and then measuring the amount of air injected into the burner. The solenoid valves were opened for successively longer periods of time, with the resulting mass delivered as shown in Fig. 3. The mass of air (solid symbols) increases linearly with time in the range between 25 and 200 ms. For short time settings, much less mass is delivered because the valves do not have sufficient time to fully open. The deviation from linear behavior when the valves are open for a long period results from the entire mass (10 g) contained in the injector storage vessel becoming depleted. Figure 3 also presents the time over which the pressure decreases in the vessel.

A number of experiments were carried out with the burner operating at baseline conditions and with air as the extinguishing agent. This was to ensure that the flame could not be extinguished simply by blowing it out. When air was injected into the burner, the flame was observed to fluctuate momentarily, but the flame was never extinguished even when the storage pressure and injection period were at their maximum values (viz. 687 kPa and 700 ms, respectively).

EXPERIMENTAL RESULTS

The figure of merit for an extinguishing agent traditionally is based upon the minimum volume concentration of agent necessary to cause the flame to go out. The minimum mass concentration can be used to normalize variable molecular weights. In terms of the mass flows of agent, m_i, and air, m_a, the figure of merit, ß, can be defined as $ß = m_i/(m_i + m_{air})$, where a smaller value for ß implies the agent is more effective. The influence of 1) air velocity, 2) injection period, and 3) air temperature on the amount of N_2 required to extinguish a JP-8 spray flame and on the value of ß was investigated as a means to validate the operation of the experimental facility. Identical experiments were repeated to attain an estimate of the statistical nature of the results.

Effect of air velocity: The storage vessel was pressurized with nitrogen to 113 kPa and the

turbulent burner set to baseline conditions. The injection interval was increased one millisecond at a time until the flame was extinguished, which occurred between 23 and 26 ms for five different runs, delivering 0.33 ± 0.03 g of nitrogen at an average rate of 11.2 ± 0.5 g/s. Figure 4 is typical of the mass injection process. The lower curve is P2, the pressure measured downstream of the metering orifice. The instantaneous mass flow is determined from the pressure upstream, with the changing temperature (also plotted) taken into account. The figure of merit is calculated to vary between 0.24 and 0.26. This compares to a figure of merit for nitrogen of 0.28, as measured by Hamins (1992) in a cup burner apparatus with JP-8 as the fuel.

Two additional experiments were carried out for air flows of 44 g/s (19 m/s) and 22 g/s (10 m/s). The high flow required an average total nitrogen mass and flow of 0.29 g and 11.5 g/s, respectively. The amount of nitrogen required to extinguish the lower air velocity flame was 0.32 g, with an average flow of 10.7 g/s. In this case, doubling the air flow reduces the amount of nitrogen required by 10%. If one calculates the figures of merit, the high air flow condition yields $\beta = 0.21$ and the low air flow yields $\beta = 0.33$.

Effect of injection time and nitrogen pressure: A series of experiments were carried out with the air and fuel flows at baseline conditions. The vessel pressure necessary to extinguish the flame for various injection periods, and the resulting mass flow of nitrogen, are shown in Table 2. For an injection time of 39 ms or shorter there is no discernable influence of the time interval on the amount of nitrogen required to quench the flame. At the longest injection time, the mass of nitrogen required for flame extinction increases, which is consistent with the conjecture that application of an agent over an extended period of time increases the amount of material required. Note that the mean nitrogen flow actually decreases with increasing time interval, which implies that β would be smallest (ie., the best performance) for the slowest application rate. Thus, it appears that the absolute value of β may not be useful for evaluating the effectiveness of an agent for these transient extinguishment experiments. (This is distinct from the quasi-steady state measurements taken with the cup burner apparatus, for which β is a reasonable measure of performance.)

Effect of air temperature: The air was preheated to 149 ± 3°C with the mass flow fixed, resulting in a 45% increase in air velocity at the burner. With the fuel pressure unchanged at 687 kPa and the nitrogen pressure equal to 113 kPa, 0.36 g of N_2 was required to extinguish the flame, implying that $\beta = 0.23$. The amount of nitrogen required for the high temperature case is slightly greater than that found with room temperature air, suggesting that the stabilizing effect of the higher temperature is offset by destabilizing effects of shorter residence time and changes in the structure of the spray.

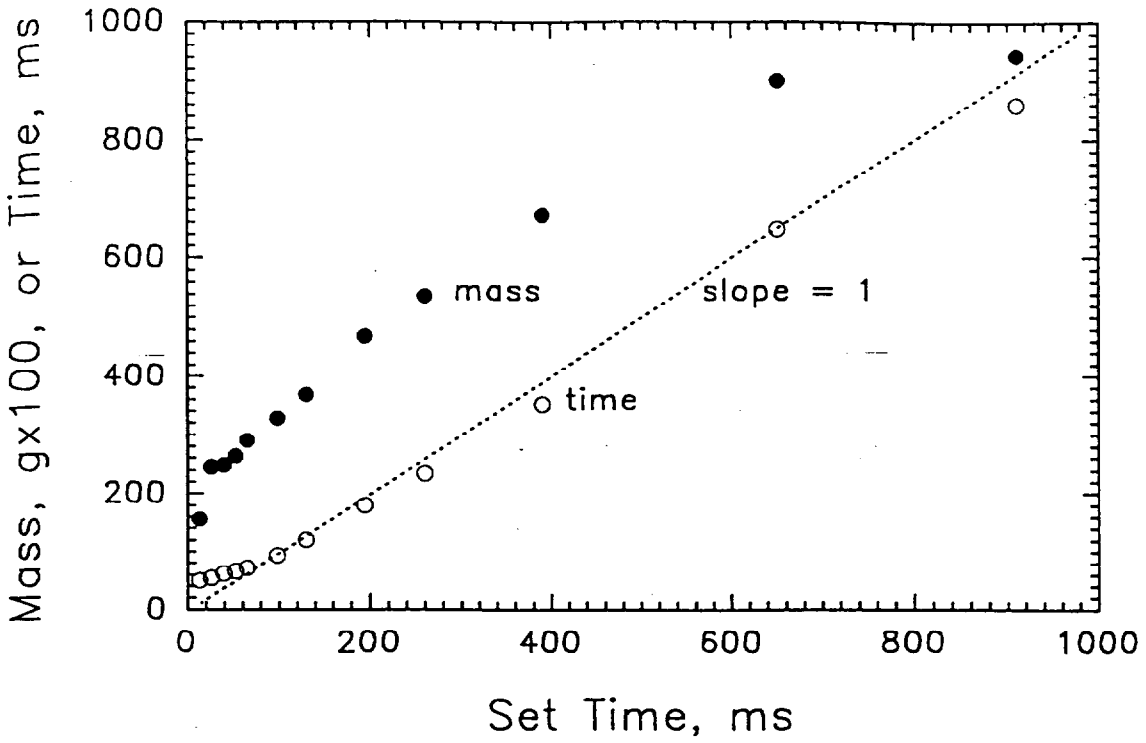

Figure 3. Injection period (open circles) and mass of air delivered by injection system (solid circles) as a function of set time. Initial pressure is 687 kPa.

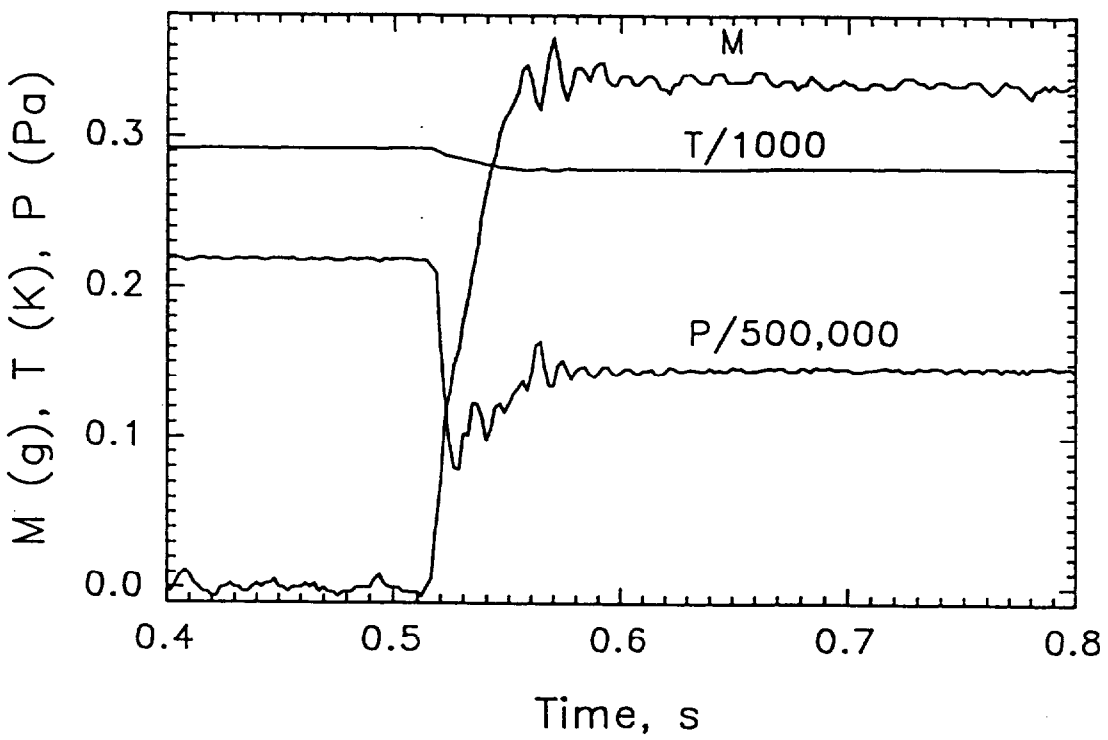

Figure 4. Pressure downstream of the orifice, temperature and mass delivered to burner during injection period. Estimated mean flow is 15.7 g/s

Table 2. Effect of injection time on mass of N_2 required to extinguish JP-8 flame				
Set Time, ms	Pressure, kPa(g)	Mass, g	Mean Flow, g/s	# of Trials
6	134	0.35	12.2	3
13	138	0.35	13.0	4
23	112	0.32	11.3	3
39	101	0.38	9.2	1
130	88	0.63	5.4	2

CONCLUSION

It is concluded that the turbulent spray burner can be a suitable device for comparing the relative performance of gaseous extinguishing agents in transient operation if fixed air and fuel flow conditions are maintained. The mass of a given agent needed to extinguish the flame is not overly sensitive to the air or fuel flow, and the agent delivery system is able to control the injection period between about 20 and 500 ms. An effectiveness measure based upon the total mass of agent is preferable to one based solely on the figure of merit, ß, because ß is too strongly influenced by the injection period during transient operation.

REFERENCES

Anderson, S.O., "Halons and the Stratospheric Ozone Issue," *Fire Journal*, 81, p. 56, May/June 1987.

Booth, K., Melia, B.J., and Hirst, R., "Critical Concentration Measurements for Flame Extinguishment Using a Laboratory 'Cup Burner' Apparatus," ICI Mond Division, Wilmington Laboratory, Aug. 31, '73.

Gann, R.G., Barnes, J.D., Davis, S., Harris, J.S., Harris, R.H., Herron, J.T., Levin, B.C., Mopsik, F.I., Notarianni, K.A., Nyden, M.R., Paabo, M., and Ricker, R.E., "Preliminary Screening Procedures and Criteria for Replacements for Halon 1211 and 1301," NIST Technical Note 1278, August 1990.

Hamins, A., personal communication, November 1992.

Peraldi, O., Knystautus, R., and Lee, J.H., "Criteria for Transition to Detonation in Tubes," *Twenty-first Symposium (International) on Combustion*, The Combustion Institute, pp. 1629-1637, 1986.

Pitts, W.M., Nyden, M.R., Gann, R.G., Mallard, W.G., and Tsang, W., "Construction of an Exploratory List of Chemicals to Initiate the Search for Halon Alternatives," NIST TN 1279, Aug. 1990.

Seshadri, K., "Studies of Flame Extinction," PhD. Dis., University of California at San Diego, 1977.

Sheinson. R.S., Penner-Hahn, J.E., and Indritz, D., "The Physical and Chemical Action of Fire Suppressants", *Fire Safety Journal 15*, 437-450 (1989).

University of New Mexico; New Mexico Engineering Research Institute, Center for Global Environmental Technologies, National Association of Fire Equipment Distributors, Inc., Halon Alternative Research Corp., Fire Suppression Systems Assoc., and Hughes Associates, Inc. Halon Alternatives Technical Working Conference 1993. Proceedings. May 11-13, 1993, Albuquerque, NM, 129-136 pp, 1993