NIST Special Publication 984

Proceedings of HOTWC-2002 12th Halon Options Technical Working Conference, Albuquerque, NM, April 20 – May 2, 2002

Richard G. Gann
and Paul A. Reneke, Editors

NIST National Institute of Standards and Technology • Technology Administration • U.S. Department of Commerce

NIST Special Publication 984

Proceedings of HOTWC-2002 12th Halon Options Technical Working Conference, Albuquerque, NM, April 30 – May 2, 2002

Richard G. Gann
and Paul A. Reneke, Editors
Fire Research Division
Building and Fire Research Laboratory

June 2002

U.S. Department of Commerce
Donald L. Evans, Secretary

Technology Administration
Phillip J. Bond, Under Secretary for Technology

National Institute of Standards and Technology
Arden L. Bement, Jr., Director

TOXICITY SCREENING OF HALOGENATED ALIPHATICS USING A NOVEL *IN VITRO* VOLATILE CHEMICAL EXPOSURE SYSTEM

Kevin T. Geiss, Ph.D. and John M. Frazier, Ph.D.
Operational Toxicology Branch, Air Force Research Laboratory, WPAFB, OH 45433
Tel. (937)-255-5150
E-mail: Kevin.Geiss@wpafb.af.mil; John.Frazier@wpafb.af.mil

Darol E. Dodd, Ph.D.
ManTech Environmental, P.O. Box 31009, Dayton, OH 45437
Tel. (937)-255-5150
E-mail: Darol.Dodd@wpafb.af.mil

ABSTRACT

A major concern while conducting *in vitro* testing of volatile chemicals, such as halons or their alternatives, is loss of the test chemical during the course of experimental studies. Imprecision in dosimetry confounds experimental results and prevents appropriate comparisons among various chemicals and exposure concentrations. We designed a novel system for exposing cell cultures to volatiles and applied this technology to the toxicity evaluation of 20 halogenated aliphatics. To rank these chemicals, we then derived a composite toxicity index based on six separate *in vitro* toxicity assays. Our results show the ability to rank a group of chemicals, based on an *in vitro* toxicity index and the correlation of these results with published toxicity values. This provides a means of discerning relative toxic potencies among groups of chemicals exposed under controlled dosimetry conditions and is especially useful for ranking volatile chemicals in materials development programs.

INTRODUCTION

One major challenge in performing *in vitro* experiments with volatile compounds is maintaining a consistent concentration of the chemical. Different engineering solutions have been developed to address this issue. However, limitations of those systems make them impractical for many research applications [1-4]. Previously, researchers studying volatile organics have generally taken one of two approaches. The more common approach is to use a sealable culture vessel, such as a flask, into which the chemical is added to the media and then the vessel is sealed for the duration of the exposure [2,4]. A drawback of that system is the significant potential for inter-sample variation. Another drawback is the inability to work with cell culture plates.

A second approach is to use a larger-sized incubator, with a flow through or static renewal system to maintain a specific vapor concentration of the test article [3]. A primary problem with this system is that the amount of chemical and headspace far exceeds what is necessary to perform a reasonably sized experiment (e.g. five plates per dose). In addition, no specific engineering controls addressing the release of test chemicals into the laboratory workspace.

A third, and more complex system, involves the use of a system of culture vessels connected by plastic tubing. The exposure atmosphere is pumped into each of the individual vessels [1]. The

major problem with this system is that volatile organics readily partition into plastics. The results of the system performance, presented by the designers, also shows significant loss of test chemical from the dosing atmosphere during the exposure period.

In response to these challenges, we developed a novel system, the VITROBOX™. This system is a rectangular, glass chamber. On one end of the chamber is a removable face plate. The face plate has three holes, roughly evenly spaced and centered. Two of the holes are for inlet and outlet port; the third is a sampling port. Thus, we have an isolated system into which vapor of a specific concentration can be forced. By having a closed system, loss of chemical due to volatilization is inhibited. Our system allows for static or flow-through dosing methodologies, with ports for sampling of both the headspace and media.

The goal of this study was to expose primary rat hepatocytes to a series of halogenated aliphatics using the novel VITROBOX™ technology and then measure various *in vitro* assay endpoints for the purpose of ranking the relative toxicities of that set of chemicals. For a number of chemicals in this test set, oxidative stress is implicated as part of their toxic mechanisms *in vitro* and *in vivo* [5]. However, oxidative stress can affect numerous toxicity endpoints and cannot be defined by measurement of a single biomarker, e.g., lipid peroxidation. We performed assays for mitochondrial function, reactive oxygen species, protein thiols, lipid peroxidation, enzyme leakage, and the catalase enzyme. To make use of these multiple *in vitro* assays for ranking purposes, a composite score was derived.

The development of a composite score is similar to the approach used in environmental toxicology analysis, the index of biological integrity (IBI) [6]. Although quite common in ecological circles, such composite scores are not often used in mammalian or human toxicology. In the case where relative rankings of chemicals is the goal, they have the potential to be a useful tool. For instance, in materials development, a group of chemicals may be synthesized and identified as potential replacements for a current commercial chemical. The challenge posed by engineers to toxicologists is simply to identify which chemicals in the group are less toxic than the chemical currently fielded for that application. Utilization of composite ranking scores allows for the reduction of dimensionality obtained from multiple toxicity assays and yields a single factor (score) upon which all chemicals tested can be compared.

MATERIALS AND METHODS

The VITROBOX™

This exposure system is based on a glass chamber with a glass face plate (Figure 1). Three holes were drilled into the face plate. Stainless steel bulkhead vacuum fittings were epoxied into each of the three holes. Individual specially-fabricated stainless steel braces (three per face plate) were epoxied onto the outside of the face plate. They were angled and off-set to prevent interference with the braces of another chamber set on top of it. Specially-fabricated stainless steel supports were epoxied to the box, front and back, top and bottom. These supports were located for interlocking when chambers were placed on top of one another. Quarter-turn paddle-head screws were used to secure the face plate through the braces into the chamber supports.

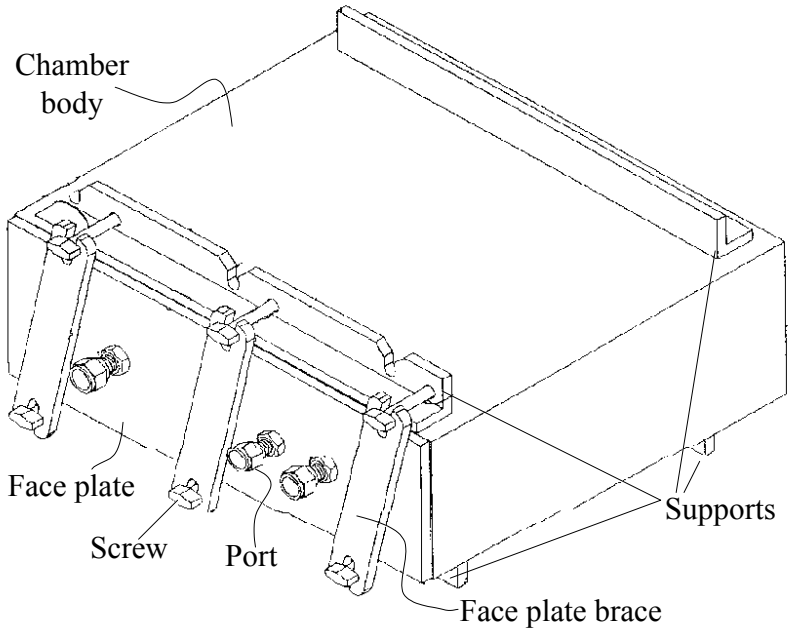

FIGURE 1. The VITROBOX™. Major parts described.

Hepatocyte Preparation and Culturing

Male Fischer 344 rat livers were perfused, and hepatocytes isolated and enriched as previously described [7] with the following modifications. Perfusion media (pH 7.2) contained 15 mM 4-(2-hydroxyethyl)-1-piperazineethane-sulfonic acid (HEPES), heparin (2.0 U/mL) and ethylene-bis(oxyethylenenitrilo)-tetraacetic acid (EGTA; 0.5 mM). Digestion perfusion media (200 mL) contained 0.5 mg/L collagenase. Cells (1 x 10^6/mL) were seeded onto six-well plates. After 4 h of incubation in a 37°C CO_2 incubator, cells were given fresh Chee's culture medium and incubated for an additional 20 h.

Chemical Dosing

All chemicals were purchased from Sigma-Aldrich (St. Louis, MO, USA), except for C_2Cl_4 and C_2HCl_3, which were purchased from Fisher Scientific (Pittsburgh, PA, USA). The test chemicals are shown in Table 1. On the day prior to volatile chemical exposures, two primary tasks were accomplished. First, the VITROBOX™ chambers were placed into a 37°C incubator overnight to allow them pre-heat. Second, Tedlar (Teflon) bags (one per dose) were loaded with air, CO_2, and a small amount of water. The bag preparation provided a final composition of 95% air/5% CO_2 and ~80% relative humidity for the VITROBOX™ following dosing. One hour before chemical exposures were to take place, the appropriate amount of chemical was placed into the Tedlar bag and the bag was placed back into the 37°C incubator.

TABLE 1. TEST CHEMICALS

Formula	CAS #	Purity/Grade
CCl_4	56-23-5	99.9%
CBr_4	558-13-4	99%
$CHBrCl_2$	75-27-4	98+%
$CHBr_2Cl$	124-48-1	98%
CBr_2Cl_2	594-18-3	95%
$CBrCl_3$	75-62-7	99%
CH_2Br_2	74-95-3	99%
$CHCl_3$	67-66-3	99%
C_2Cl_4	127-18-4	Certified Reagent
C_2HCl_3	79-01-6	99.5%
1,2-$C_2H_4Cl_2$	107-06-2	99.8%
1,1,1-$C_2H_3Cl_3$	71-55-6	99%
1,1,2-$C_2H_3Cl_3$	79-00-5	97%
1,1,2-$C_2H_3Br_3$	78-74-0	99%
1,1,2,2-$C_2H_2Cl_4$	79-34-5	98+%
CH_2Cl_2	75-09-2	99.9%
$CHBr_3$	75-25-2	99+%
CH_2BrCl	74-97-5	99%
1,2-C_2H_4BrCl	107-04-0	98%
1,2-$C_2H_4Br_2$	106-93-4	99%

Immediately prior to chamber loading, the test chemicals were diluted in Chee's medium. The dosing process was begun by replacing the existing cell culture media with the chemical dosing media. One VITROBOX™ was then removed from the incubator. Culture plates were placed into the chamber without their culture plate lids and the chamber was closed. For each chemical dose a separate chamber was used. The chemical dosing bag was attached by flexible tubing to the dosing port on the face plate of the chamber. Next, tubing with an empty capture bag was attached to the chamber face plate (Figure 2).

Once the bags were in place, the dosing atmosphere was infused into the chamber. Then the bags were detached from each port and the ports were sealed with fittings containing Teflon septa. The use of standard vacuum fittings on the face plate allows the user to attach additional instruments or equipment to the VITROBOX™. For example, a flow-through dosing protocol could be employed, instead of the static dosing put forth in this study. This enables the user to dose with different chemicals for different periods of time, without having to open the chamber. If desired, the headspace can be sampled for gas chromatographic analysis using a gas-tight syringes (Figure 2).

For all experiments, cells were exposed to the chemicals for 4 h, then removed from the chambers and prepared for analysis. The design of the VITROBOX™ allows up to four chambers to be stacked in a standard-sized laboratory cell culture incubator. Since the chambers are small enough, they are placed into a fume hood when the face plates are removed at the end

of the experiment to access the cell culture plates, preventing exposure of personnel to the test chemical.

Each chamber is designed such that it can hold up to five standard-sized microwell plates (i.e. 6-, 24-, 48- or 96-well format). As an alternative, flat-bottomed culture flasks, petri dishes, chambered microscope slides or any of a variety of other vessels can be used.

Toxicity Assays

The measurement of the intracellular reduction of the tetrazolium salt (MTT) to blue formazan was performed following the method of Mossman [8]. The $EC50_{MTT}$ was calculated as the dose that would result in a 50% decrease in colorimetric absorbance of the MTT product versus that in the control samples. Lactate dehydrogenase (LDH) enzyme leakage was measured by spectrophotometric analysis using the method of Sattar *et al*. [9]. The $EC50_{LDH}$ was calculated as the dose that would result in a 50% leakage of LDH into the media. Catalase enzyme activity was determined using the method of Aebi [10]. The enzymatic activity was expressed in umol/min per mg of protein. The LEC_{CAT} was the lowest effective concentration (LEC) to cause a significant decrease in catalase activity versus that in the control samples.

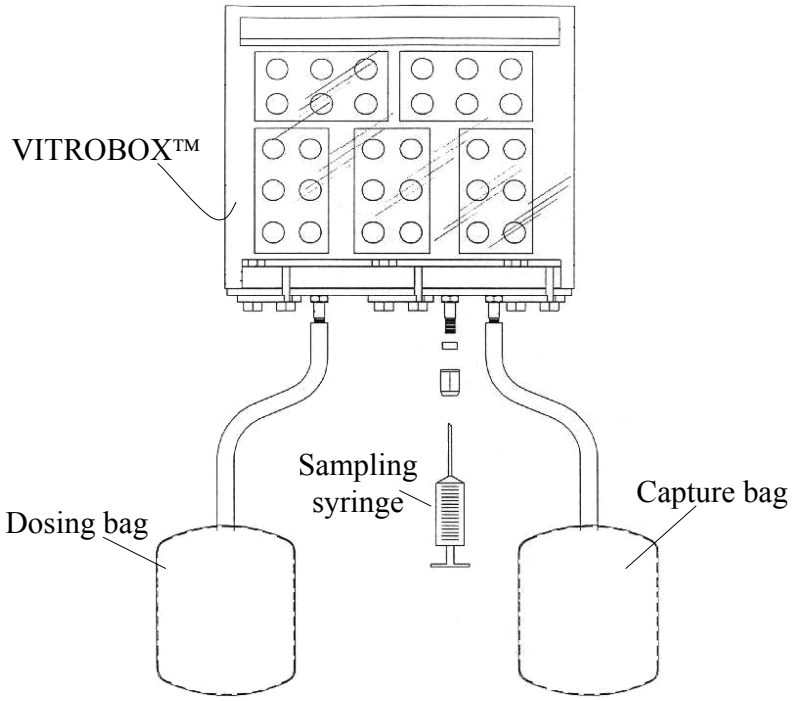

FIGURE 2. System Set-up for Dosing the VITROBOX™. Panel A, Schematic of system set up for dosing experiment.

Malondialdehyde was measured as an indicator of lipid peroxidation (LP) using the method of Yokoyama *et al*. [11]. The LEC_{LP} was determined as the lowest effective chemical concentration to cause an increase in the level of LP in hepatocytes above that measured in the control cells. Protein thiol (SH) groups were determined by the method of Sedlak and Lindsay [12]. The $EC20_{SH}$ was the lowest effective chemical concentration to cause a 20% decrease in the level of total thiols in hepatocytes versus that measured in the control cells. Reactive oxygen species (ROS) generation was assayed using the method of Wang and Joseph [13]. The ROS assay was measured in fluorescent units and expressed as a percent of that measured in the control cell samples. The LEC_{ROS} was determined as the lowest effective chemical concentration to cause an increase in the level of ROS in hepatocytes above that measured in the control cells.

Composite Toxicity Score (CTS)

For each of the toxicity endpoints (MTT, LDH, ROS, SH, CAT and LP), the chemicals were ranked in the order of lowest to highest effective concentration. The chemical with the lowest effective concentration in each assay was given a rank of 1 (most toxic). The chemical with the highest effective concentration, meaning lowest toxicity, was given a rank of 20. In this fashion, for each of the six assays, all chemicals were ranked from 1 to 20. Following the within-endpoint ranking, the ranks for all six tests were summed for each chemical. Once the CTS was derived, the chemicals were once again ranked based on their respective CTS.

RESULTS AND DISCUSSION

The VITROBOX™

The use of this chamber allowed for the exposure of multiple culture vessels to the same dosing conditions. The construction of the box is appropriate for utilization of different types of cell culturing vessels. Given the size of the VITROBOX™, multiple units can be stacked in a standard size incubator. The dosing atmosphere and medium may be sampled while the cultures are sealed in the chamber.

Cytotoxicity

Oxidative stress is involved in toxicity induced by a number of chemicals. Halogenated aliphatic hydrocarbons (HAHs), e.g., carbon tetrachloride, are among a group of chemicals that have been shown to induce oxidative stress [5]. Table 2 shows the results from one of the cytotoxicity assays, MTT. These toxicity values, as well as those for the other five toxicity assays, were used to develop cytotoxicity scores (CTS) for each of the chemicals. The results of the CTS ranking are shown in Table 3. Some relationships among the chemical structures can be identified based on their ranking by CTS.

TABLE 2. CHEMICAL TOXICITY RESULTS FOR MTT ASSAY

CHEMICAL	$EC50_{MTT}$ (mM)
CCl_4	0.78
$CHCl_3$	1.20
CH_2Cl_2	32.00
CBr_4	0.18
$CHBr_3$	0.60
CH_2Br_2	6.40
CH_2BrCl	127.00
$CHBr_2Cl$	0.56
CBr_2Cl_2	0.30
$CHBrCl_2$	2.20
$CBrCl_3$	0.97
C_2Cl_3H	1.05
1,1,2-$C_2H_3Cl_3$	2.54
1,2-C_2H_4BrCl	0.49
1,2-$C_2H_4Br_2$	0.31
1,2-$C_2H_4Cl_2$	4.37
1,1,2,2-$C_2H_2Cl_4$	1.73
1,1,1-$C_2H_3Cl_3$	0.23
1,1,2-$C_2H_3Br_3$	0.38
C_2Cl_4	0.19

TABLE 3. RESULTS OF CTS RANKING OF TEST CHEMICALS

RANK	CHEMICAL
1	CBr_4
2	1,1,1-$C_2H_3Cl_3$
3	CBr_2Cl_2
4	CCl_4
5	1,1,2-$C_2H_3Br_3$
6	1,2-$C_2H_4Br_2$
7	$CHBr_3$
8	C_2Cl_4
9	$CHBr_2Cl$
10	C_2Cl_3H
11	1,2-C_2H_4BrCl
12	$CBrCl_3$
13	1,1,2,2-$C_2H_2Cl_4$
14	$CHBrCl_2$
15	1,1,2-$C_2H_3Cl_3$
16	$CHCl_3$
17	CH_2Br_2
18	1,2-$C_2H_4Cl_2$
19	CH_2Cl_2
20	CH_2BrCl

1) In pair-wise comparisons, where methanes contained the same number of halogens and one member of the pair contained n chlorines (Cl_n) and the other had Cl_{n-1} and a single Br (e.g. CH_2Cl_2 and CH_2BrCl; $CHCl_3$ and $CHBrCl_2$), chemicals in these pairs ranked closely.
2) In the cases where the difference between the methanes or ethanes was the number of an individual halogen, as the number of halogens increased, so did the toxicity.
3) In all cases of methanes or ethanes that had either a Cl or a Br and where each of these six chemicals had the same number of halogens, the chemicals that contained only Br had higher toxicities than the ones with only Cl.
4) The four most toxic chemicals included three fully halogenated methanes along with an ethane with a fully halogenated carbon.

One of the most drastic differences between the toxicity values of apparently "similar" chemicals is between 1,1,1-$C_2H_3Cl_3$ and 1,1,2-$C_2H_3Cl_3$. The toxicity of 1,1,1-$C_2H_3Cl_3$, as indicated by the EC and LEC values, was up to 10 times greater than the similar indices of 1,1,2-$C_2H_3Cl_3$. This points to the importance of the positioning of a halogen over absolute halogen number in a two-carbon halogenated hydrocarbon.

Our toxicity results are in line with other published studies. However, since this study was more comprehensive in the number of toxicity endpoints and chemicals, it is difficult to fully compare the results of the present study to earlier studies. Some differences among the studies can be explained. One previous study considered a number ($n > 50$) of halogenated aliphatics based on toxicity endpoints measured in rat liver microsomes [14]. For the one endpoint, lipid peroxidation, only six of the chemicals in their study produced measurable effects. As expected, the actual toxicity values for lipid peroxidation in our hepatocyte system differed from those derived in their microsome study. For example, in this study the LEC_{LP} for CCl_4 was 0.78 mM, whereas in the microsomal study, the related endpoint was seen at 3.11 mM. There are various reasons for differences between microsomes and hepatocytes for the lipid peroxidation endpoint. The microsomes are isolated enzyme systems, so studies are not confounded by issues of cellular membrane transport kinetics, as would be the case for hepatocytes. Microsomes also do not have the full complement of antioxidant defenses, as do whole cells. Microsomes may be useful for isolating metabolic contribution, but are not likely to be appropriate for determining oxidative stress in whole cells. The bioactivation of halogenated aliphatics by P450 enzymes in the liver plays a prominent role in their cellular toxicity [15]. However, when comparing our cytotoxicity results (namely MTT) with another study that utilized HeLa cells [16], there is some agreement among the data. The $EC50_{MTT}$ values in our study for CCl_4 and $CHCl_3$ are 0.78 and 1.20 mM, respectively. In the Eriksson *et al*. [16], HeLa cells were exposed to the test chemicals for 30 min and then incubated for an additional 72 h and resulted in values of 1.00 and 5.00 mM for $EC50_{MTT}$, respectively.

An early study [17] of some halogenated compounds in primary rat hepatocytes provided a comparison for three chemicals in our study. Chang *et al*. [17] used 24 h exposures in small closed flasks and dissolved the chemicals first in a "vehicle" before treatment. Their results showed that the toxicity was similar to that observed here, 1,2-$C_2H_4Br_2$ > 1,2-$C_2H_4Cl_2$ > $CHCl_3$. The Suzuki *et al*. [2] study assessed the effects of a 10 mM dose with a number of halogenated chemicals in a primary rat hepatocyte system by measuring LDH and LP. Numerous procedural

differences with the present study include: pre-exposure culture time of 2 d (versus 1 d for the present study); 2 h chemical exposure period (vs. 4 h); vehicle used to dissolve test chemicals (vs. no vehicle); and a lack of dose-response data. Nonetheless, the ranking was similar to ours for the following chemicals in the LDH and LP assays: $CCl_4 \geq 1,1,1\text{-}C_2H_3Cl_3 > C_2C_4 > C_2HCl_3 > 1,1,2\text{-}C_2H_3Cl_3 > CHCl_3$. However, none of the LEC/EC values for these chemicals determined in the present study were 10 mM or greater.

CONCLUSIONS AND FUTURE WORK

The VITROBOX™ is an effective system for *in vitro* exposures using volatile chemicals. Quantitative comparisons can be made between volatile chemicals tested in a cellular system. The engineering solutions addressed by this system are unmatched in any other commercially-available product. Its flexibility supports application to a wide variety of cell culture methodologies and formats. Likewise, its versatility would support the development of new *in vitro* testing approaches and is not limited to hepatotoxicity. In particular, an *in vitro* method for cardiac sensitization of volatile chemicals would benefit from this type of exposure control. Necessary validation would have to be performed, but the capability provided by this system is unmatched. This exposure system provides a mechanism that enhances confidence and accuracy in headspace and dosing chemical concentrations. The ability to process multiple samples for determining various endpoints from a single experiment supports the development of composite toxicity scores. As shown here, the CTS is a useful and accurate assessment of the relative toxicity within a group of chemicals. Further extension of the work presented here would involve correlation of dose levels *in vitro* with estimated or measured occupational exposure levels and target organ doses.

ACKNOWLEDGEMENTS

Thanks to TSgt Michelle Curran and TSgt Gerri Miller for technical assistance. This work was supported by the Air Force Office of Scientific Research (JON# 2312A202 and 2312A208) and performed in conjunction with USAF Contract F41624-96-C-9010 (ManTech/Geo-Centers Joint Venture). The animals used in this study were handled in accordance with the principles stated in the Guide for the Care and Use of Laboratory Animals, Institute of Laboratory Animal Resources, National Research Council, National Academy Press, 1996, and the Animal Welfare Act of 1966, as amended. The VITROBOX™ was manufactured by GEO-CENTERS, Inc. (Newton Centre, MA, USA). The VITROBOX™ is patent pending, application #09/594,815, filed June 16, 2000. Information contained in this document was cleared by ASC/PA as document ASC-01-0868, 4/20/01.

REFERENCES

1. Mückter, H., Zwing, M., Bäder, S., *et al*. "A novel apparatus for the exposure of cultured cells to volatile agents," *Journal of Pharmacological and Toxicological Methods* 40:63-69, 1998.
2. Suzuki, T., Nezu, K., Sasaki, H., *et al*. "Cytotoxicity of chlorinated hydrocarbons and lipid peroxidation in isolated rat hepatocytes," *Biological and Pharmaceutical Bulletin,* 17:82-86, 1994.

3. Steel-Goodwin, L., Pravacek, T., Hancock, B., *et al*. "Trichloroethylene: Free radical studies in B6C3F1 mouse liver slices," Air Force Technical Report AL/OE-TR-1996-0079, 1996.
4. Thomas, D., van Kuijk, F.J., and Stephens, R.J., "Quantitative determination of hydroxy fatty acids as an indicator of in vivo lipid peroxidation: oxidation products of arachidonic and docosapentaenoic acids in rat liver after exposure to carbon tetrachloride," *Analytical Biochemistry*, 206:353-358, 1992.
5. Halliwell, B. and Chirico, S., "Lipid peroxidation: its mechanism, measurement, and significance," *American Journal of Clinical Nutrition*, 57:715S-725S, 1993.
6. Karr, J.R., "Defining and measuring river health," *Freshwater Biology*, 41:221-234, 1999.
7. Seglen, P. O., "Preparation of isolated rat liver cells," In: *Methods in Cell Biology*, Prescott, D. M (Ed.), New York: Academic Press, pp. 29-83, 1976.
8. Mossmann, T., "Rapid colorimetric assay for cellular growth and survival: application to proliferation and cytotoxicity assay," *Journal of Immunological Methods*, 6:55-63, 1983.
9. Sattar, A.C., Brewster, D., Viau, C., and Acosta, D., "Effect of glutathione depletion and oxidative stress on the in vitro cytotoxicity of velnacrine maleate," *Toxicology Letters* 76:257-265, 1995.
10. Aebi, H., "Catalase in vitro," *Methods in Enzymology*, 105:121-127, 1984.
11. Yokoyama, H., Horie, T., and Awazu, S., "Oxidative stress in isolated rat hepatocytes during naproxen metabolism," *Biochemical Pharmacology*, 49:991-996, 1995.
12. Sedlak, J. and Lindsay, R.H., "Estimation of total, protein-bound, and nonprotein sulfhydryl groups in tissue with Ellman's reagent," *Analytical Biochemistry*, 25:192-205, 1968.
13. Wang, H. and Joseph, J.A., "Quantifying cellular oxidative stress by dichlorofluorescein assay using microplate reader," *Free Radical Biology and Medicine* 27:612-619, 1999.
14. Crebelli, R., Andreoli, C., Carere, A., *et al*., "Toxicology of halogenated aliphatic hydrocarbons: structural and molecular determinants for the disturbance of chromosome segregation and the induction of lipid peroxidation," *Chemico-Biological Interactions*, 98:113-129, 1995.
15. Waller, C. L., Evans, M.V., and McKinney, J.D., "Modeling the cytochrome P450-mediated metabolism of chlorinated volatile organic compounds," *Drug Metabolism and Disposition*, 24:203-210, 1996.
16. Eriksson, L., Jonsson, J., and Berglind, R., "External validation of a QSAR for the acute toxicity of halogenated aliphatic hydrocarbons," *Environmental Toxicology and Chemistry*, 12:1185-1191, 1993.
17. Chang, L. W., Pereira, M.A., and Klaunig, J.E., "Cytotoxicity of halogenated alkanes in primary cultures of rat hepatocytes from normal, partial hepatectomized, and preneoplastic/neoplastic liver," *Toxicology and Applied Pharmacology*, 80:274-283, 1985.