NISTIR 6527

Measurement Needs for Fire Safety: Proceedings of an International Workshop

Thomas J. Ohlemiller
Erik L. Johnsson
Richard G. Gann

NIST
National Institute of Standards and Technology
Technology Administration, U.S. Department of Commerce

NISTIR 6527

Measurement Needs for Fire Safety: Proceedings of an International Workshop

Thomas J. Ohlemiller
Erik L. Johnsson
Richard G. Gann
Building and Fire Research Laboratory
National Institute of Standards and Technology
Gaithersburg, MD 20899-8653

June 2000

U.S. Department of Commerce
William M. Daley, Secretary

Technology Administration
Dr. Cheryl L. Shavers, Under Secretary of Commerce for Technology

National Institute of Standards and Technology
Raymond G. Kammer, Director

NOTICES:

Works of authors who are not staff members of NIST are provided for information purposes. NIST is not responsible for their content.

The identification of any commercial product or trade name does not imply endorsement or recommendation by the National Institute of Standards and Technology, nor is it intended to imply that the product identified is necessarily the best available for the purpose.

Products Tests - Europa

by

Kristen Opstad

SINTEF Civil and Environmental Engineering

Norwegian Fire Research Laboratory

Harmoniet fire testing in Europe

- Common test methods for reaction to fire is expected in the fall of year 2000
- Common classifications are expected in the spring of year 2000

Both Common European and old national systems will be operating in transition period

Test methods for the Euro-classes

- prEN ISO 1182:1999 - Non combustibility
- prEN ISO 1716:1999 - Heat of combustion
- prEn SBI:1999 - Heat release rate, Smoke production, flame spread
- prEN 11925-2:1999 - Ignitability when subjected to direct impingement of flame
- prEN ISO 9239: Fire test for floor-coverings
- prEN 1187 - Roofing
- ISO 9705 - Referanse methode for SBI

Class	Test Methods (Not for flooring)			
	EN ISO Non-combust	EN ISO 1716 Calorific Potential	EN ISO Single Burn Item	EN ISO 11925-2 Small Flame
A1	X	X	(X	
A2	X	X	X	
B			X	X
C			X	X
D			X	X
E				
F				

Class	[illegible] (Ignoring only)			
	EN ISO 1182 [illegible] Combustibility	EN ISO [illegible] Calorific Potential	EN ISO 9239-1 Radiant heat source	EN [illegible] Small [illegible]
$A1_{fl}$	X	X		
$A2_{fl}$	X	X	X	
B_{fl}			X	X
C_{fl}			X	X
D_{fl}			X	X
E_{fl}				
F_{fl}	[illegible]			

prEN ISO 1182 - Non-combustibility

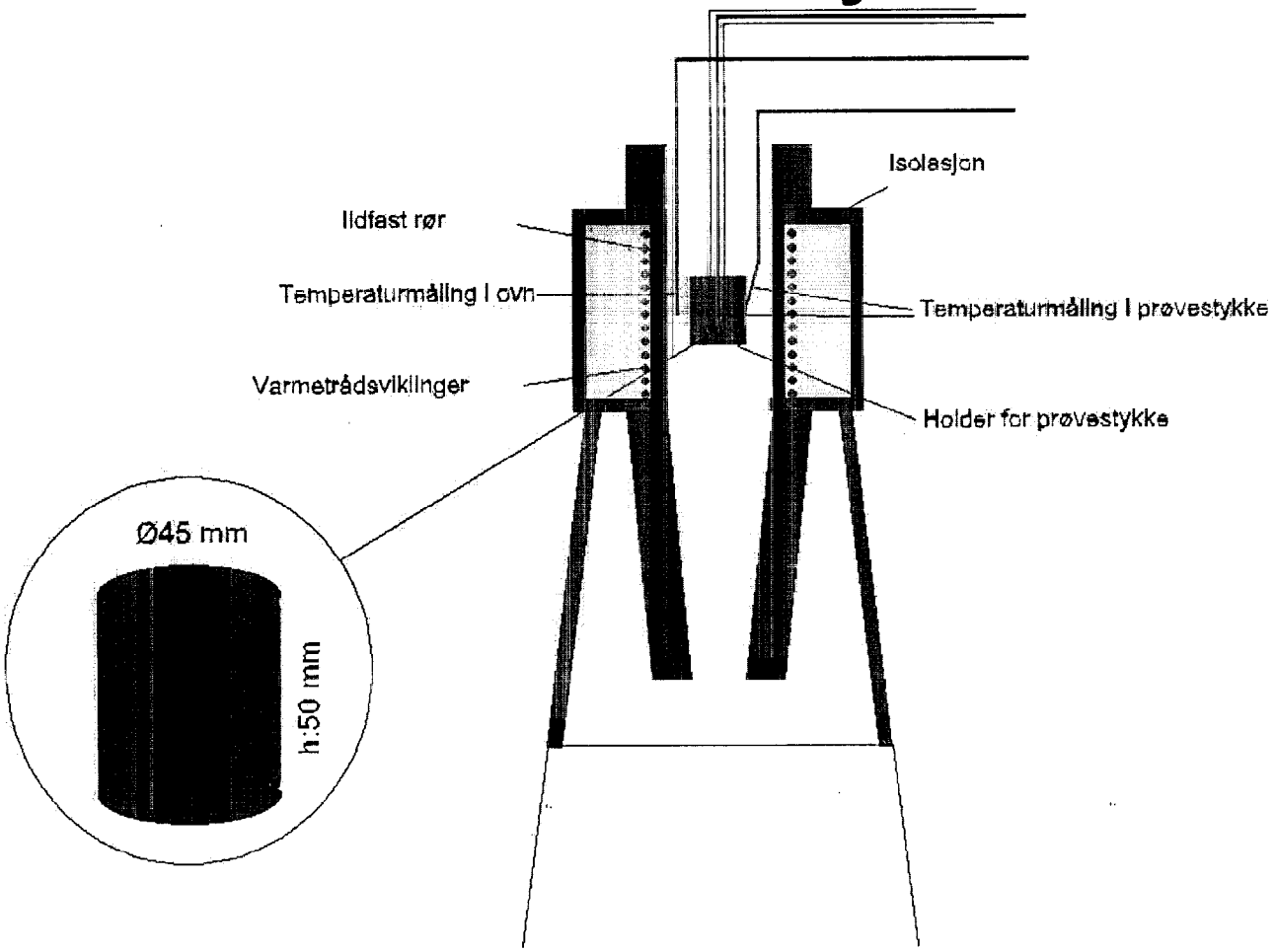

What expresses prEN ISO 1182?

Non combustibility according to specific criteria:

- temperature rise in furnace
- visible flames
- mass loss

Classification A1 or A2

(for flooring: $A1_{fl}$ or $A2_{fl}$)

prEN ISO 1716 - Calorific value

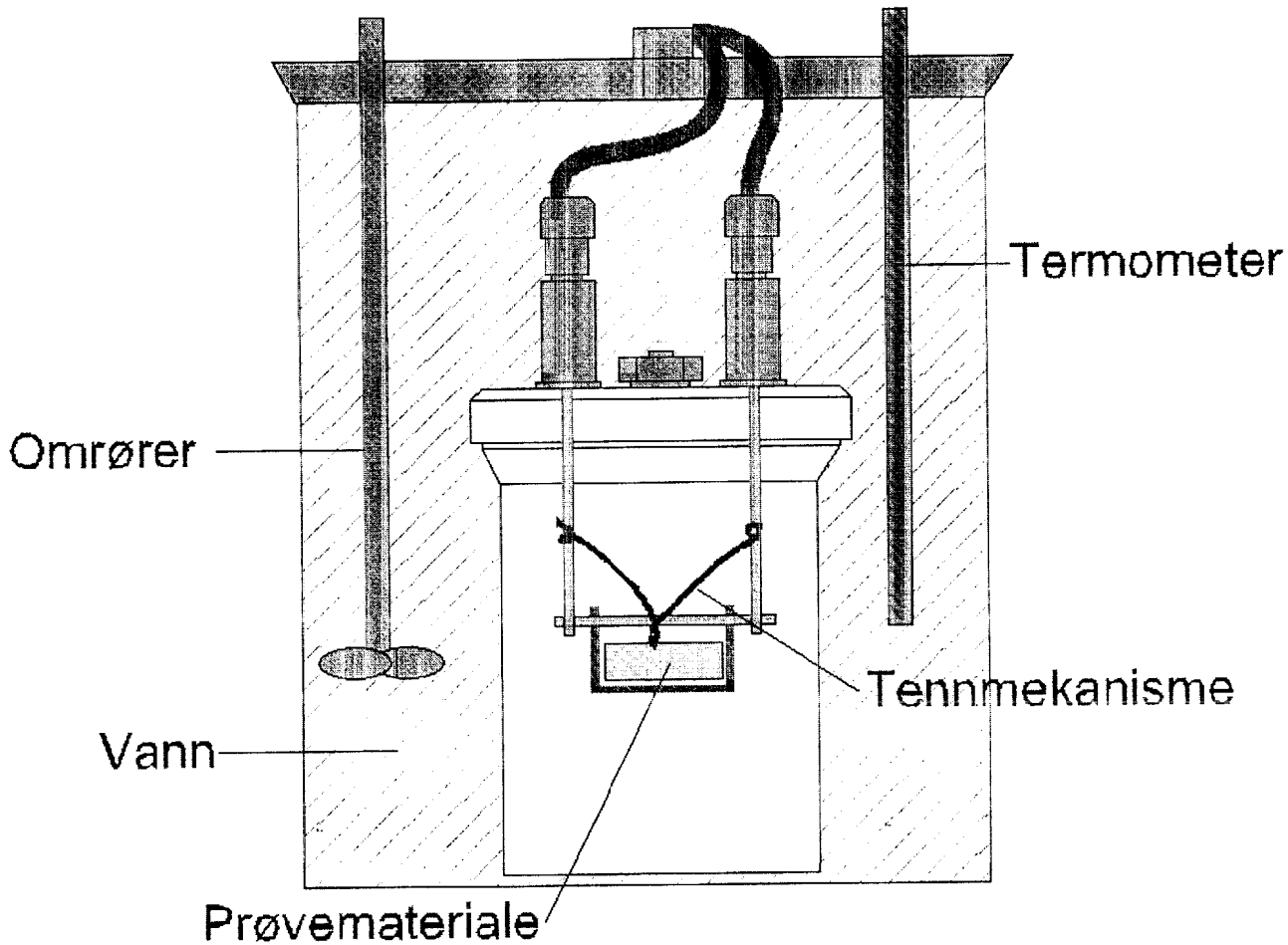

Terms of prEN ISO 1716?

- **The heat of combustion (complete combustion)**

  Expressed as MJ/kg or as MJ/m^2

  Classification of A1 or A2
  (for flooring: $A1_{fl}$ or $A2_{fl}$)

prEN SBI - Single Burning Item

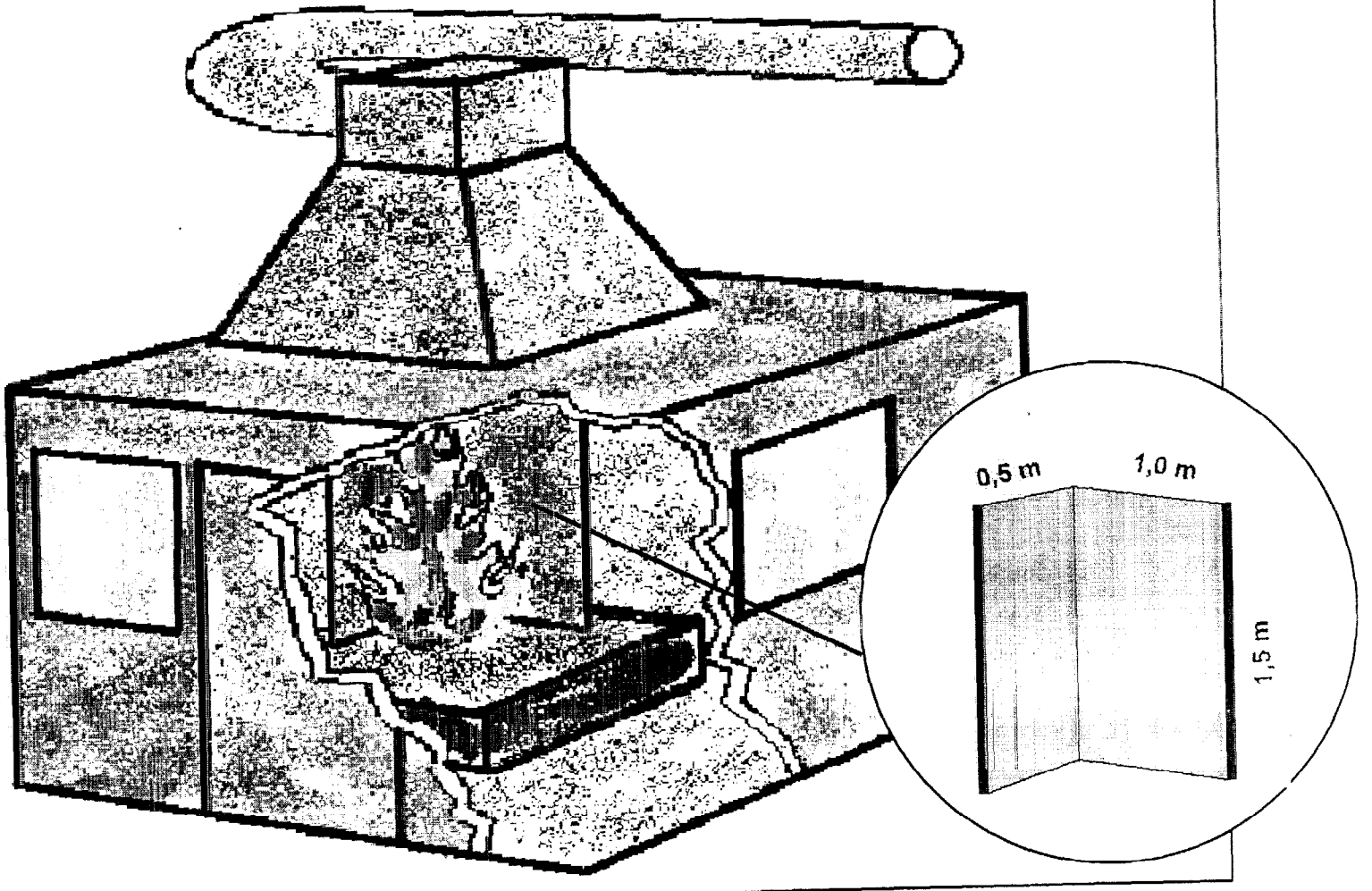

What is measured in a SBI-test?

- Heat release rate
- Smoke production
- "Flame spread"
- Burning droplets
- Heat release growth in term of FIGRA
- Increase of smoke production in terms of SMOGRA
- Used to classify lining products according to A1, A2, B, C and D

Calculation of FIGRA (SMOGRA)

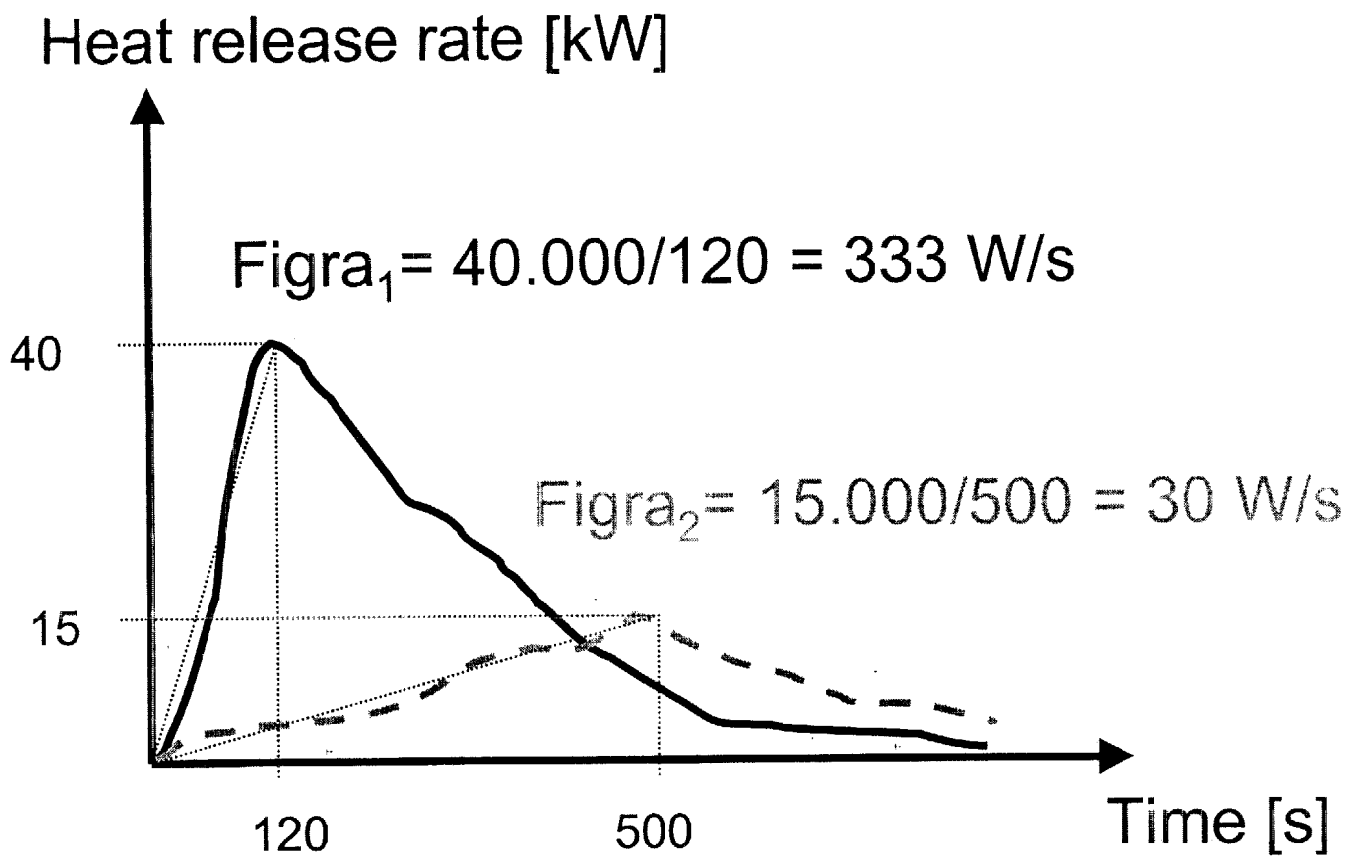

ISO 9705 => FIGRA

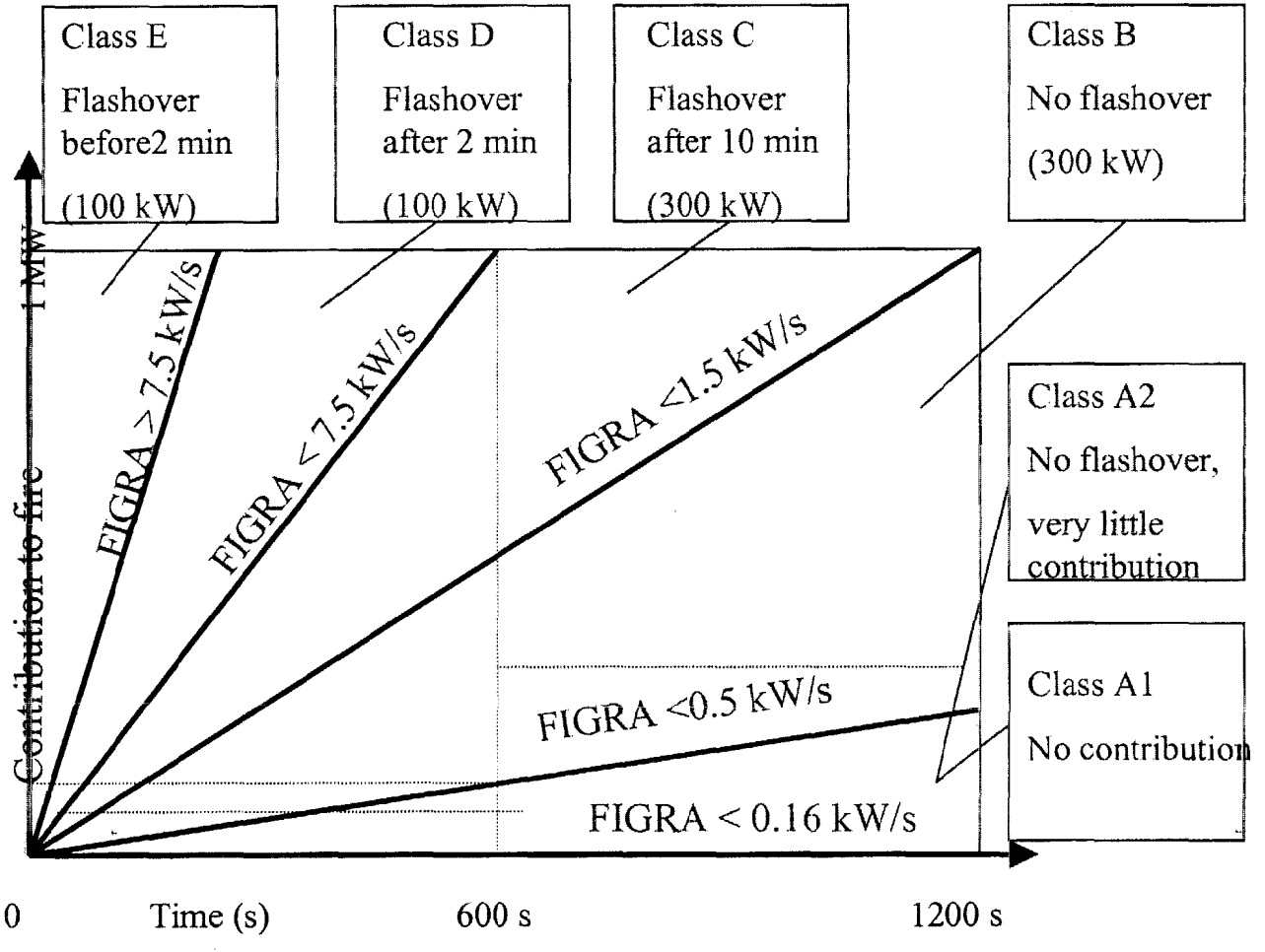

ISO 9705 - the Room/Corner test

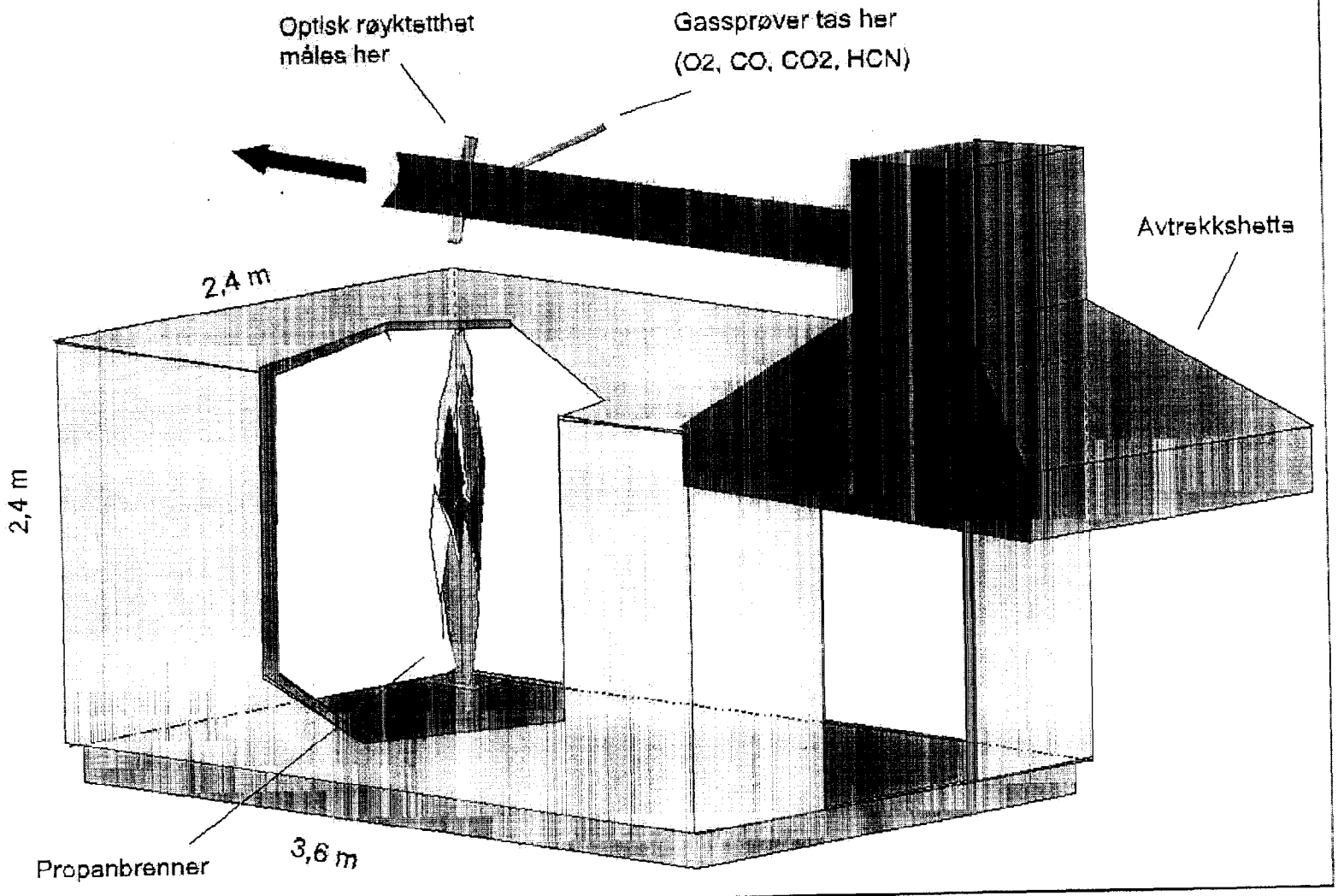

prEN ISO 11925-2

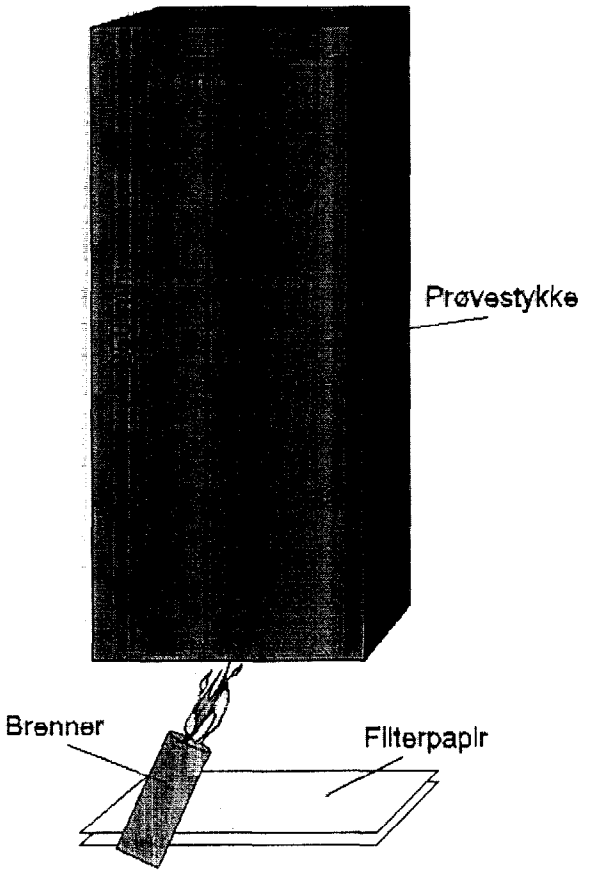

Eksponering av kant

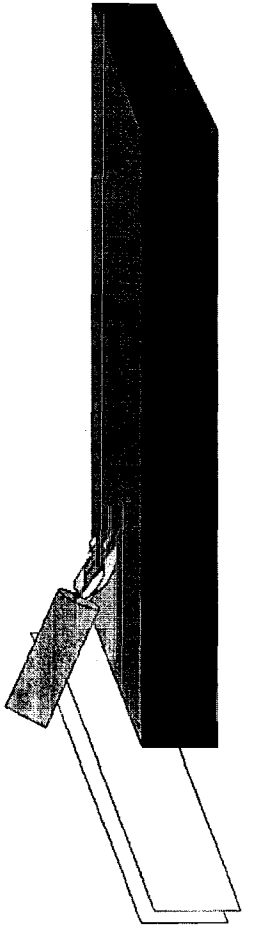

Eksponering av overflate

Used for classification in classes:

B, C, D og E and classes: B_{fl}, C_{fl}, D_{fl} og E_{fl}

prEN ISO 9239-1:

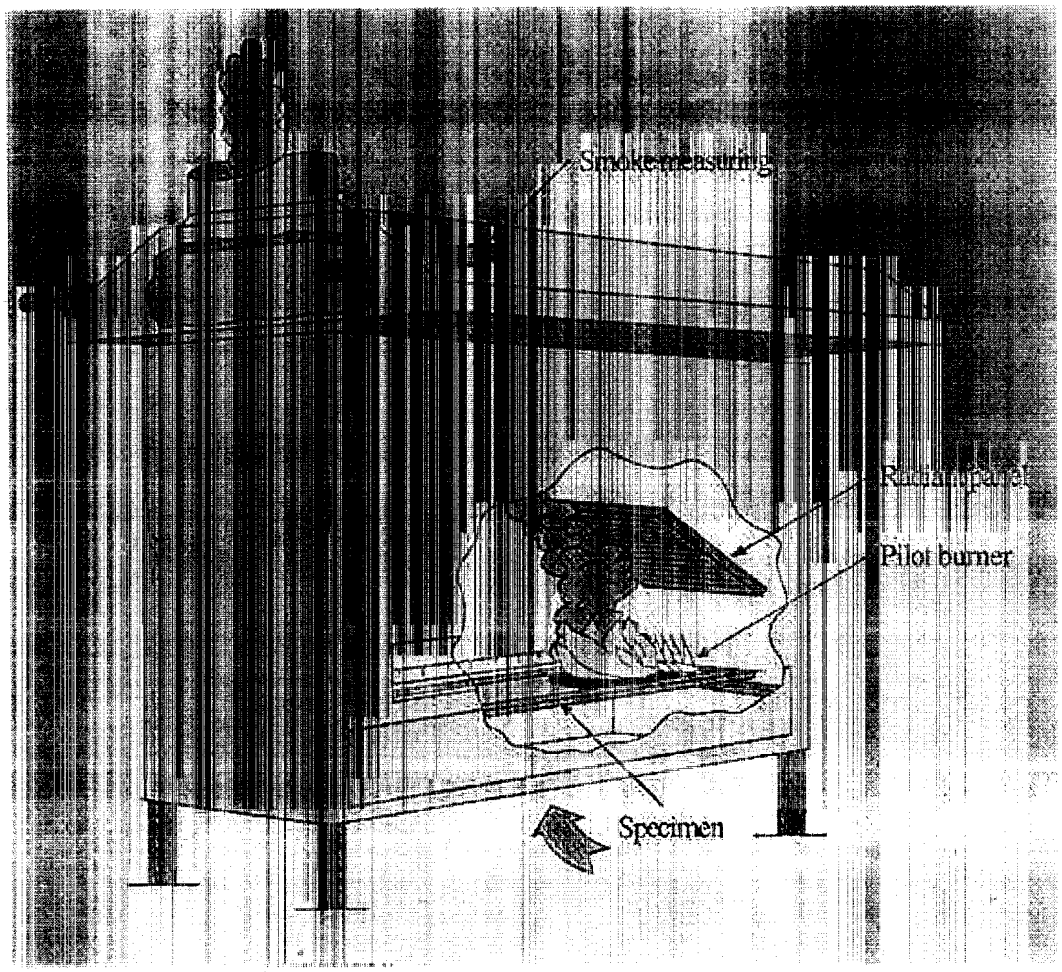

Horizontal specimen

Radiant heat panel (1,1- 11,0 kW/m^2)

Pilot ignition

CRF - Critical Radiant Flux

Smoke production

Classification as $A2_{fl}$, B_{fl}, C_{fl}, D_{fl}

prEN 1187 - Roofing

Three separate methods are available:

- **DIN 4102 - 7 (flying brands)**
- **NT FIRE 006 (NS-INSTA 413) (flying brands under wind conditions)**
- **The <u>French</u> methods (flying brands under wind and external heating conditions)**

Fire Resistance tests - 11 new standards (Formal Vote) EN 1363 ..EN 1366

- The standards provide more details
- Some additional instrumentation
- Field of direct applications of test results
- Extended applications of test results
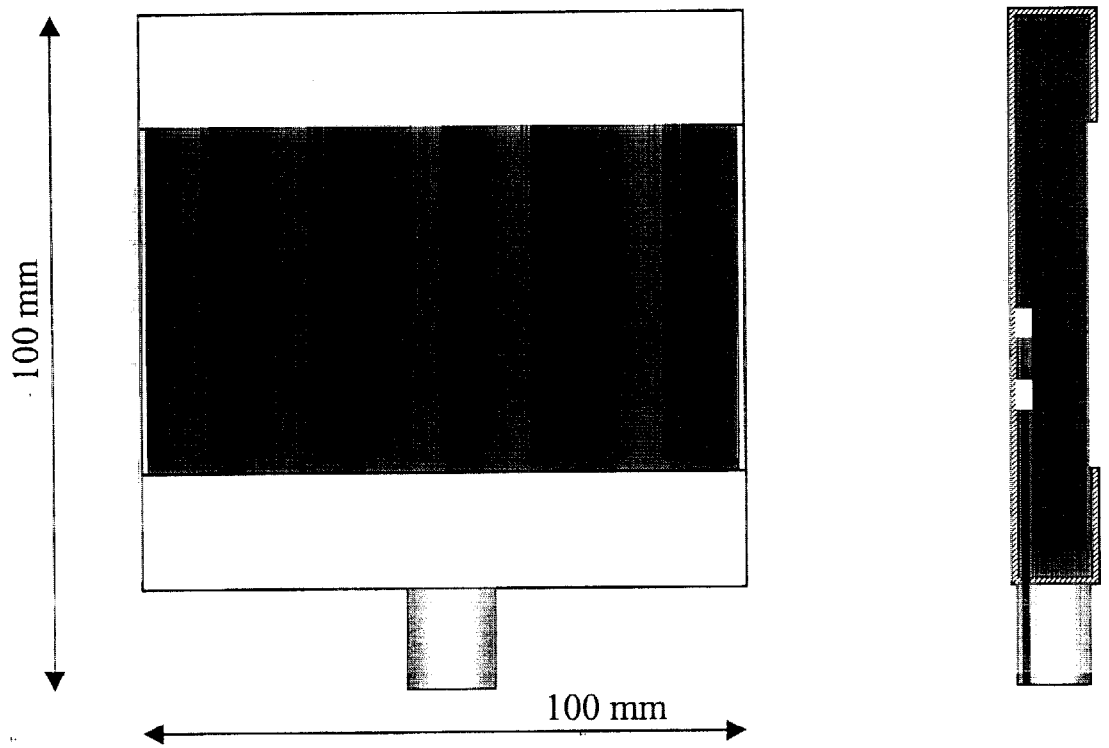
Plate thermometer - EN 1363-1