U. S. DEPARTMENT OF COMMERCE

BUILDING MATERIALS AND STRUCTURES

REPORT BMS66

Plumbing Manual

Report of
Subcommittee on Plumbing
Central Housing Committee on
Research, Design, and
Construction

NATIONAL
BUREAU OF STANDARDS

The program of research on building materials and structures, carried on by the National Bureau of Standards, was undertaken with the assistance of the Central Housing Committee, an informal organization of governmental agencies concerned with housing construction and finance, which is cooperating in the investigations through a committee of principal technicians.

CENTRAL HOUSING COMMITTEE ON RESEARCH, DESIGN, AND CONSTRUCTION

A. C. Shire, *Chairman.*
United States Housing Authority.

Howard P. Vermilya, *Vice Chairman.*
Federal Housing Administration.

Sterling R. March, *Secretary.*

Pierre Blouke,
Federal Home Loan Bank Board.

Hugh L. Dryden,
National Bureau of Standards.

Louis A. Simon,
Public Buildings Administration.

Luther M. Leisenring,
Construction Division (War).

Edward A. Poynton,
Office of Indian Affairs.

John S. Donovan,
Farm Security Administration.

George W. Trayer,
Forest Service (F. P. Laboratory).

Joseph M. DallaValle,
Public Health Service.

George E. Knox,
Yards and Docks (Navy).

William R. Talbott,
Veterans' Administration.

Wallace Ashby,
Bureau of Agricultural Chemistry and Engineering.

NATIONAL BUREAU OF STANDARDS STAFF COMMITTEE ON ADMINISTRATION AND COORDINATION

Hugh L. Dryden, *Chairman.*
Mechanics and Sound.

Phaon H. Bates,
Clay and Silicate Products.

Hobart C. Dickinson,
Heat and Power.

Warren E. Emley,
Organic and Fibrous Materials.

Gustav E. F. Lundell,
Chemistry.

Addams S. McAllister,
Codes and Specifications.

Henry S. Rawdon,
Metallurgy.

The Forest Products Laboratory of the Forest Service is cooperating with both committees on investigations of wood constructions.

[For list of BMS publications and directions for purchasing, see cover page III.]

UNITED STATES DEPARTMENT OF COMMERCE · Jesse H. Jones, Secretary
NATIONAL BUREAU OF STANDARDS · Lyman J. Briggs, Director

BUILDING MATERIALS *and* STRUCTURES

REPORT BMS66

Plumbing Manual

Report of Subcommittee on Plumbing
Central Housing Committee on Research, Design, and Construction

ISSUED NOVEMBER 22, 1940

The National Bureau of Standards is a fact-finding organization; it does not "approve" any particular material or method of construction. The technical findings in this series of reports are to be construed accordingly.

UNITED STATES GOVERNMENT PRINTING OFFICE · WASHINGTON · 1940
FOR SALE BY THE SUPERINTENDENT OF DOCUMENTS, WASHINGTON, D. C. · PRICE 20 CENTS

Foreword

This report has been prepared by a representative committee to serve as a guide for Federal agencies that design, install, or approve plumbing. It is the product of a careful review of existing recommendations, supplemented by consideration of the results of experimental work at this Bureau and by group discussion among the committee members. The aim has been to insure adequate and healthful plumbing at a minimum of expense. It is hoped that the report will prove useful, not only for Federal plumbing work, but also in connection with efforts to bring about greater uniformity in plumbing requirements and to reduce the cost of construction, of which plumbing forms a part.

LYMAN J. BRIGGS, *Director*.

Plumbing Manual

Report of Subcommittee on Plumbing of the Central Housing Committee on Research, Design, and Construction

ROBERT K. THULMAN, *Chairman.*
Federal Housing Administration.

VINCENT T. MANAS, *Vice Chairman.*
United States Housing Authority.

STERLING R. MARCH, *Secretary.*

MARY FIDELIA TAYLOR, *Assistant Secretary.*

ROY B. HUNTER, *Technical Advisor to Subcommittee.*
National Bureau of Standards.

CHARLES N. DIENER,
Home Owners' Loan Corporation.

PETER J. FURLONG,
Public Buildings Administration.

ARTHUR R. GEIGER,
Office of Quartermaster General (War).

NORMAN C. HEPBURN,
Veterans' Administration.

ROBERT J. POTBURY,
Yards and Docks (Navy), represented by Preston H. Barnard.

JOHN W. ROCKEY,
Bureau of Agricultural Chemistry and Engineering (Agriculture).

RALPH E. TARBETT,
Public Health Service.

GEORGE N. THOMPSON,
National Bureau of Standards.

ABSTRACT

A manual of recommended plumbing practice is presented by a committee composed of representatives of Federal agencies most concerned with the subject. The committee has taken into consideration available recommendations of other bodies and results of research performed at the National Bureau of Standards. Part I consists of an introduction explaining the origin of the work. Part II contains recommendations regarding necessary sizes of piping, precautions against pollution of water supply, permissible types of venting, and other matters customarily covered in plumbing codes. Part III contains information useful in applying the recommendations, including illustrative interpretations of the specific requirements in part II. The recommendations are presented as suitable for adoption by Federal agencies engaged in actual plumbing work or in passing upon plans of structures containing plumbing.

CONTENTS

	Page
Foreword	II
I. Introduction	4
II. Recommended minimum requirements for plumbing	6
Chapter I. Definitions	6
Sec. 101. Definitions	6
Chapter II. General regulations	9
Sec. 201. Installation of piping	9
Sec. 202. Changes in direction	9
Sec. 203. Prohibited fittings	9
Sec. 204. Prohibited connections	9
Sec. 205. Protection of pipes	10
Sec. 206. Protection of electrical machinery	10
Sec. 207. Protection of water tanks	10
Sec. 208. Workmanship	10
II. Recommended minimum requirements for plumbing—Continued.	
Chapter III. Quality, weight, and thickness of materials	10
Sec. 301. Quality of materials	10
Sec. 302. Identification of materials	10
Sec. 303. Vitrified-clay pipe	10
Sec. 304. Concrete pipe	10
Sec. 305. Cast-iron soil pipe	10
Sec. 306. Cast-iron water pipe	10
Sec. 307. Cast-iron screwed pipe	10
Sec. 308. Wrought-iron pipe	10
Sec. 309. Steel pipe	10
Sec. 310. Brass and copper pipe	10
Sec. 311. Brass tubing	10

Page

II. Recommended minimum requirements for plumbing—Continued.
Chapter III. Quality, etc.—Con.
Sec. 312. Copper tubing 10
Sec. 313. Lead pipe 10
Sec. 314. Sheet lead 10
Sec. 315. Calking lead 10
Sec. 316. Sheet copper and brass 11
Sec. 317. Zinc-coated (galvanized) sheet iron and steel 11
Sec. 318. Screwed fittings 11
Sec. 319. Soldered fittings 11
Sec. 320. Calking ferrules 11
Sec. 321. Soldering nipples and bushings 11
Sec. 322. Floor flanges 11
Sec. 323. Packing 11
Sec. 324. Setting compound 11
Sec. 325. Gaskets 11
Sec. 326. Alternate materials 11
Chapter IV. Joints and connections 11
Sec. 401. Tightness 11
Sec. 402. Vitrified-clay and concrete pipe 11
Sec. 403. Calked joints 11
Sec. 404. Screwed joints 11
Sec. 405. Joints in cast-iron pipe 11
Sec. 406. Joints between cast-iron and other piping 11
Sec. 407. Wiped joints 12
Sec. 408. Joints between lead and other piping 12
Sec. 409. Joints in copper tubing 12
Sec. 410. Slip joints and unions 12
Sec. 411. Roof flashings 12
Sec. 412. Floor connections 12
Sec. 413. Increasers and reducers 12
Sec. 414. Supports 12
Chapter V. Traps and clean-outs 12
Sec. 501. Types and sizes of traps 12
Sec. 502. Prohibited traps 12
Sec. 503. Traps required 12
Sec. 504. Trap seal 12
Sec. 505. Trap clean-outs 13
Sec. 506. Installation of traps 13
Sec. 507. Pipe clean-outs 13
Sec. 508. Pipe clean-outs required 13
Sec. 509. Clean-out equivalents 13
Sec. 510. Accessibility of traps and clean-outs 13
Sec. 511. Grease interceptors 13
Sec. 512. Oil interceptors 13
Sec. 513. Sand interceptors 13
Sec. 514. Floor drains 13
Sec. 515. Backwater valves 13
Chapter VI. Water supply and distribution 13
Sec. 601. Quality of water 13
Sec. 602. Protection of water supply 13
Sec. 603. Protection from freezing 13

Page

II. Recommended minimum requirements for plumbing—Continued.
Chapter VI. Water supply—Con.
Sec. 604. Size of building main 13
Sec. 605. Quantity of water 14
Sec. 606. Size of fixture branches 14
Sec. 607. Shut-offs 14
Sec. 608. Material for water piping and tubing 14
Sec. 609. Relief valves 14
Chapter VII. Plumbing fixtures 14
Sec. 701. Quality of fixtures 14
Sec. 702. Installation of fixtures 14
Sec. 703. Frostproof closets 14
Sec. 704. Floor drains 14
Sec. 705. Fixture strainers 14
Sec. 706. Fixture overflow 14
Sec. 707. Swimming pools 14
Sec. 708. Miscellaneous fixtures 14
Sec. 709. Ventilation 14
Chapter VIII. Soil and waste pipes for sanitary systems 14
Sec. 801. Materials 14
Sec. 802. Minimum sizes 14
Sec. 803. Fixture units 15
Sec. 804. Stacks to be vertical 15
Sec. 805. Size of soil and waste pipes 15
Sec. 806. Offsets 15
Sec. 807. Horizontal and primary branches 16
Sec. 808. Sumps and receiving tanks 16
Chapter IX. Storm drains 16
Sec. 901. General 16
Sec. 902. Leaders and gutters 17
Sec. 903. Size of storm drains and leaders 17
Sec. 904. Separate and combined drains 17
Sec. 905. Closed system required 18
Sec. 906. Overflow pipes 18
Sec. 907. Subsoil sumps 18
Sec. 908. Construction of subsoil drains 18
Chapter X. Vents and venting 18
Sec. 1001. Material 18
Sec. 1002. Protection of trap seals 18
Sec. 1003. Stack-vents required 18
Sec. 1004. Vent stacks required 18
Sec. 1005. Distance of trap from vent 18
Sec. 1006. Dual vents permitted 19
Sec. 1007. Group vents permitted 19
Sec. 1008. Yoke and relief vents 19
Sec. 1009. Circuit vents and loop vents 20
Sec. 1010. Vents for flat-bottomed fixtures 20
Sec. 1011. Vents for resealing traps 20
Sec. 1012. Fixtures at base of main vent 20

Page

II. Recommended minimum requirements for plumbing—Continued.
Chapter X. Vents and venting—Con.
Sec. 1013. Size and length of main vents 21
Sec. 1014. Size and length of stack-vents 21
Sec. 1015. Size of back vents and relief vents 21
Sec. 1016. Size of circuit and loop vents 21
Sec. 1017. Relief vents for offsets 21
Sec. 1018. Frost closure 22
Sec. 1019. Location of vent terminals 22
Sec. 1020. Vents not required 22
Sec. 1021. Vents prohibited 22
Chapter XI. Indirect connections to waste pipes 22
Sec. 1101. Indirect wastes 22
Sec. 1102. Size of refrigerator wastes 22
Sec. 1103. Overflow pipes 22
Chapter XII. Maintenance 22
Sec. 1201. Defective plumbing 22
Sec. 1202. Temporary toilet facilities 22
Sec. 1203. Condensate and blow-off connections 22
Chapter XIII. Inspection and tests 23
Sec. 1301. Inspection 23
Sec. 1302. Tests required 23
Sec. 1303. Notification for test 23
Sec. 1304. Labor and equipment for tests 23
Sec. 1305. Tests of drainage system 23
Sec. 1306. Final test 23
Sec. 1307. Tests of water-supply system 24
Sec. 1308. Final condition 24
Sec. 1309. Separate tests permitted 24
Sec. 1310. Covering of work 24
Sec. 1311. Defective work 24
Sec. 1312. Tests of leaders 24
Sec. 1313. Outbuildings 24
Sec. 1314. Garages 24
Sec. 1315. Certificate of approval 24
Sec. 1316. Test of defective plumbing 24
Sec. 1317. Inspections and tests not required 24

III. Explanations, illustrations, and interpretations 27
Par. 101. Definitions [1] 27
Par. 201. Installation of piping 28
Par. 301. Quality of materials 29
Par. 303. Vitrified-clay pipe 29
Par. 304. Concrete pipe 29
Par. 305. Cast-iron soil pipe 29
Par. 306. Cast-iron water pipe 29

Page

III. Explanations, illustrations, and interpretations—Continued.
Par. 307. Cast-iron screwed pipe 30
Par. 308. Wrought-iron pipe 30
Par. 309. Steel pipe 30
Par. 310. Brass and copper pipe 30
Par. 311. Brass tubing 30
Par. 312. Copper tubing 30
Par. 313. Lead pipe 30
Par. 314. Sheet lead 31
Par. 315. Calking lead 31
Par. 316. Sheet copper and brass 31
Par. 317. Zinc-coated (galvanized) sheet iron and steel 31
Par. 318. Screwed fittings 31
Par. 319. Soldered fittings 31
Par. 320. Calking ferrules 31
Par. 321(*a*) Soldering nipples 31
Par. 322. Floor flanges 31
Par. 323. Packing 31
Par. 324. Setting compound 31
Par. 325. Gaskets 31
Par. 402. Vitrified-clay and concrete pipe 31
Par. 409. Joints in copper tubing 32
Par. 413. Increasers and reducers 32
Par. 501. Types and sizes of traps 32
Par. 502. Prohibited traps 32
Par. 601. Quality of water 33
Par. 602(*d*). Protection from backflow 34
Par. 604. Size of building main 35
Par. 701. Quality of fixtures 45
Par. 705. Fixture strainers 45
Par. 707. Swimming pools 46
Par. 800. Acid or chemical wastes 46
Par. 802. Minimum sizes of soil and waste pipes 46
Par. 803. Fixture-unit ratings 47
Par. 805. Sizes of soil and waste pipes 47
Par. 807. Horizontal and primary branches 48
Par. 902. Gutters and leader connections 54
Par. 903. Size of storm drains and leaders 55
Par. 903(*d*). Allowance for projecting walls 56
Par. 904. Separate and combined drains 56
Par. 1002. Protection of trap seals 58
Par. 1005. Distance of trap from vent 58
Par. 1008. Yoke and relief vents 58
Par. 1010. Vents for flat-bottomed fixtures 60
Par. 1011. Vents for resealing traps 60
Par. 1012. Fixtures at base of main vent 60
Par. 1101. Indirect connections 61
Par. 1305(*b*). Air tests 62

[1] For explanation of paragraph numbering, see note preceding paragraph 101, page 27.

TABLES

		Page
803.	Fixture units per fixture or group	15
805.	Permissible number of fixture units on horizontal branches and stacks	15
807.	Capacities of horizontal branches and primary branches of the building drain	16
903(*b*).	Maximum roof area for leaders	17
903(*c*).	Maximum roof area for building storm sewers or drains	17
1009(*a*).	Limits for circuit and loop venting	20
1013.	Size and length of main vents	21
201–III.	Approximate velocities for given slopes and diameters	28
313–III.	Diameter and weight of lead pipe	30
320–III.	Size, diameter, and weight of brass calking ferrules	31
321(*a*)–III.	Diameter and weight of soldering nipples	31
604–III(*a*).	Fixture-unit ratings for estimating water-supply demands	40
604–III(*b*).	Allowance in equivalent length of pipe for friction loss in valves and threaded fittings	41
604–III(*c*).	Actual diameters corresponding to nominal diameters of different kinds of pipe	41
604–III(*d*).	Illustration of the probable effects of corrosion and caking in service on the capacities of water pipes	42
604–III(*e*).	Water-demand estimates for residential types of building (flush-tank supply)	44
805(*b*)–III.	Permissible limits in fixture units on soil and waste stacks	47
807–III.	Capacities of building drains under section 807(*b*), part II	49
807(*c*)–III.	Limits in capacities of building drains under the provisions of section 807(*c*), part II	49
807(*d*)–III.	Limits in capacities of building drains under the provisions of section 807(*d*), part II	52
902–III.	Maximum roof area for semicircular roof gutters with a fall of 1/16 inch per foot or less	55
904–III.	Required diameters for combined building drains and sewers according to number of fixture units	57

FIGURES

		Page
1.	Standard plumbing symbols	25
2.	Illustration of definitions	26
3.	Continuous waste	33
4.	Depth of trap seal	33
5.	Illustration of air gap	34
6.	Curve for estimating supply demands	35
7.	Flow chart for smooth pipe	36
8.	Flow chart for fairly smooth pipe	37
9.	Flow chart for fairly rough pipe	38
10.	Flow chart for rough pipe	39
11.	Relation of flow to diameter of pipe for friction loss of 10 lb/in.^{2} per 100 feet	40
12.	Illustrative graphs for applying sections 807(*c*) and (*d*)	50
13.	Distance of trap from vent	58
14.	Dual vents	58
15.	Group vents for lavatories and bathtubs	59
16.	Stack-vented piping lay-out for one-story house	59
17.	Piping lay-out for two-story house with one bathroom	60
18.	Piping lay-out for one-story duplex house	60
19.	Piping lay-out for bathrooms in each of two stories	61
20.	Piping lay-out for duplex apartments	61
21.	Illustration of circuit-and-loop vents	61
22.	Limits for circuit-and-loop vents	61
23.	Drains and vents for flat-bottomed fixtures	62
24.	Indirect wastes	62

PART I. INTRODUCTION

Plumbing is a matter of interest to many agencies of the Federal Government. Some of these actually design plumbing systems and supervise their installation, while others have a responsibility in connection with loans on houses, in allocation of funds for public housing, and in other ways. All naturally desire that the plumbing with which they have to deal shall be sanitary and efficient and shall be reasonable in cost.

In order to have good and economical plumbing, it is necessary that there should be some agreement on the rules governing its design and installation. Such agreement is not to be found in local plumbing codes, which vary to a large extent in their requirements without apparent justification. Although some progress has been made toward greater uniformity, there is still a marked lack of agreement even among recommended plumbing requirements. In view of this situation, representatives of a number of Government agencies, acting as a subcommittee of the Central Housing Committee, have undertaken the preparation of this

manual. It is intended to serve as a guide in their own work and as recommended procedure where local codes do not govern. It is also offered as a contribution to efforts toward greater uniformity in plumbing requirements. Particular emphasis is placed upon its usefulness in connection with low-cost housing, where there is special need to take advantage of all legitimate economies. The field of the manual, however, is not restricted to housing, since the same fundamental principles apply in any structure.

In developing the manual, close attention has been paid to previous recommendations prepared by the Subcommittee on Plumbing of the Department of Commerce Building Code Committee and issued under the title "Recommended Minimum Requirements for Plumbing" by the National Bureau of Standards. Similar recommendations prepared by nongovernmental bodies have also been consulted. The results of research extending over a long period at the National Bureau of Standards have been made available to the committee, including results of experiments that have been completed since the committee started its work. In addition, the members of the committee have brought to the work an experience with plumbing extending over many years. The manual represents the consensus of the committee and is recommended as suitable for use throughout the Federal Government service.

The subject matter of the manual is divided into two parts, as follows: part II, containing general and basic requirements concisely stated; and part III containing many illustrated interpretations, specific citations of applicable accepted standards, rules for applying exceptions to general or basic requirements as stated in part II, and much other information considered valuable to the builder in complying with the requirements and to the authorities in determining compliance. Part III also contains illustrations of simple plumbing lay-outs permissible under the requirements of part II and applicable to low-cost housing. (See par. 1008 and figs. 16 to 20, pt. III.)

Several innovations or departures from the usual form of presenting plumbing requirements have been made, to a few of which particular attention is invited. These changes from conventional methods of presenting minimum requirements apply principally to required sizes of soil and waste stacks and of building drains and building sewers and to permissible methods of venting. The changes have been made for the purpose of permitting the engineer to design, and the builder to install, plumbing systems more in accord with the actual demands of particular buildings than can be done under tables that make no distinction for buildings of different sizes and types other than the total number of fixtures. The results to be expected from applying the proposed methods, especially in relation to large buildings, are (1) better transportation of sewage, (2) safer and more satisfactory operation in the long run, and (3) more economical construction than can be obtained under the old methods.

The arrangement of the manual in two main parts, one containing subject matter not likely to need frequent revision or additions and the other containing the subject matter likely to need revision to keep abreast of current standards, will facilitate revision as experience and new developments make such revision advisable. It is also to be expected that new data and other information of value to the engineer or builder will be added to part III with each revision.

Acknowledgment is made to Martin Goerl for assistance in preparing the report, to Theodora C. Bailey for editorial review, and to E. A. Ledwith for assistance in preparation of the illustrations.

PART II. RECOMMENDED MINIMUM REQUIREMENTS FOR PLUMBING

CHAPTER I. DEFINITIONS

[NOTE.—See fig. 2, pt. III, for general illustrations of definitions]

SEC. 101.—DEFINITIONS.

Accepted standards.—Accepted standards are the standards cited in this manual, or other standards approved by the authority having jurisdiction over plumbing. (See par. 101, pt. III.)

Air gap.—The air gap in a water-supply system for plumbing fixtures is the vertical distance between the supply-fitting outlet (spout) and the highest possible water level in the receptor when flooded. (See fig. 5, pt. III.)

If the plane of the end of the spout is at an angle to the surface of the water, the mean gap is the basis for measurement.

Approved.—Approved means accepted as satisfactory to the authority having jurisdiction over plumbing.

Area drain.—An area drain is a drain installed to collect surface or rain water from an open area.

Backflow.—Backflow means the flow of water into a water-supply system from any source except its regular one. Back siphonage is one type of backflow.

Backflow connection.—A backflow connection is any arrangement whereby backflow can occur.

Back vent.—A back vent is a branch vent installed primarily for the purpose of protecting fixture traps from self-siphonage.

Branch.—A branch is any part of a piping system other than a main. (See *Main.*)

Branch interval.—A branch interval is a length of soil or waste stack corresponding in general to a story height, but in no case less than 8 feet, within which the horizontal branches from one floor or story of the building are connected to the stack.

Branch vent.—A branch vent is any vent pipe connecting from a branch of the drainage system to the vent stack.

Building drain.—The building (house) drain is that part of the lowest horizontal piping of a building-drainage system which receives the discharge from soil, waste, and other drainage pipes inside the walls of the building and conveys it to the building (house) sewer beginning 5 feet outside the inner face of the building wall.

Building-drainage system.—The building-drainage system consists of all piping provided for carrying waste water, sewage, or other drainage from the building to the street sewer or place of disposal.

Building main.—The building main is the water-supply pipe, including fittings and accessories, from the water (street) main or other source of supply to the first branch of the water-distributing system.

Building sewer.—The building (house) sewer is that part of the horizontal piping of a building-drainage system extending from the building drain 5 feet outside of the inner face of the building wall to the street sewer or other place of disposal (a cesspool, septic tank, or other type of sewage-treatment device or devices) and conveying the drainage of but one building site.

Building subdrain.—A building (house) subdrain is that portion of a drainage system which cannot drain by gravity into the building sewer.

Circuit vent.—A circuit vent is a group vent extending from in front of the last fixture connection of a horizontal branch to the vent stack.

Combination fixture.—Combination fixture is a trade term designating an integral combination of one sink and one or two laundry trays in one fixture.

Continuous-waste-and-vent.—A continuous-waste-and-vent is a vent that is a continuation of and in a straight line with the drain to which it connects. A continuous-waste-and-vent is further defined by the angle the drain and vent at the point of connection make with the hori-

zontal; for example, vertical continuous-waste-and-vent, 45° continuous-waste-and-vent, and flat (small-angle) continuous-waste-and-vent.

Continuous waste.—A waste from two or more fixtures connected to a single trap.

Cross-connection.—See *Interconnection.*

Developed length.—The developed length of a pipe is its length along the center line of the pipe and fittings.

Diameter.—Unless specifically stated, the term diameter means the nominal diameter as designated commercially.

Distance.—The distance or difference in elevation between two sloping pipes is the distance between the intersection of their center lines with the center line of the pipe to which both are connected.

Double offset.—A double offset is two offsets installed in succession or series in the same line. (See fig. 2, pt. III.)

Drain.—A drain or drain pipe is any pipe which carries water or water-borne wastes in a building-drainage system.

Drainage piping.—Drainage piping is all or any part of the drain pipes of a plumbing system.

Dry vent.—A dry vent is any vent that does not carry water or water-borne wastes.

Dual vent.—A dual vent (sometimes called a unit vent) is a group vent connecting at the junction of two fixture branches and serving as a back vent for both branches.

Effective opening.—The effective opening is the minimum cross-sectional area between the end of the supply-fitting outlet (spout) and the inlet to the controlling valve or faucet. The basis of measurement is the diameter of a circle of equal cross-sectional area.

If two or more lines supply one outlet, the effective opening is the sum of the effective openings of the individual lines or the area of the combined outlet, whichever is the smaller.

Fixture branch.—A fixture branch is the supply pipe between the fixture and the water-distributing pipe.

Fixture drain.—A fixture drain is the drain from the trap of a fixture to the junction of the drain with any other drain pipe.

Fixture unit.—A fixture unit is a factor so chosen that the load-producing values of the different plumbing fixtures can be expressed approximately as multiples of that factor.

Flood level.—Flood level in reference to a plumbing fixture is the level at which water begins to overflow the top or rim of the fixture.

Grade.—The grade of a line of pipe is its slope in reference to a horizontal plane. In plumbing it is usually expressed as the fall in inches per foot length of pipe.

Group vent.—A group vent is a branch vent that performs its functions for two or more traps.

Horizontal branch.—A horizontal branch is a branch drain extending laterally from a soil or waste stack or building drain, with or without vertical sections or branches, which receives the discharge from one or more fixture drains and conducts it to the soil or waste stack or to the building (house) drain.

Indirect waste pipe.—An indirect waste pipe is a waste pipe which does not connect directly with the building-drainage system, but discharges into it through a properly trapped fixture or receptacle.

Interconnection.—An interconnection, as the term is used in this manual, is any physical connection or arrangement of pipes between two otherwise separate building water-supply systems whereby water may flow from one system to the other, the direction of flow depending upon the pressure differential between the two systems.

Where such connection occurs between the sources of two such systems and the first branch from either, whether inside or outside the building, the term cross-connection (American Water Works terminology) applies and is generally used.

Jumpover.—See *Return offset.*

Leader.—A leader or downspout is the water conductor from the roof to the storm drain or other means of disposal.

Loop vent.—A loop vent is the same as a circuit vent except that it loops back and connects with a soil- or waste-stack-vent instead of the vent stack.

Main.—The main of any system of continuous piping is the principal artery of the system to which branches may be connected.

Main vent.—See *Vent stack.*

270988°—40——2

Nonpressure drainage.—Nonpressure drainage refers to a condition in which a static pressure cannot be imposed safely on the building drain. This condition is sometimes referred to as gravity flow and implies that the sloping pipes are not completely filled.

Offset.—An offset in a line of piping is a combination of elbows or bends which brings one section of the pipe out of line with but into a line parallel with another section.

Plumbing.—Plumbing is the work or business of installing in buildings the pipes, fixtures, and other apparatus for bringing in the water supply and removing liquid and water-borne wastes. The term is also used to denote the installed fixtures and piping of a building.

Plumbing fixtures.—Plumbing fixtures are receptacles which receive and discharge water, liquid, or water-borne wastes into a drainage system with which they are connected.

Plumbing system.—The plumbing system of a building includes the water-supply distributing pipes; the fixtures and fixture traps; the soil, waste, and vent pipes; the building (house) drain and building (house) sewer; and the storm-drainage pipes; with their devices, appurtenances, and connections all within or adjacent to the building.

Pool.—A pool is a water receptacle used for swimming or as a plunge or other bath, designed to accommodate more than one bather at a time.

Pressure drainage.—Pressure drainage, as used in this manual, refers to a condition in which a static pressure may be imposed safely on the entrances of sloping building drains through soil and waste stacks connected thereto.

Primary branch.—A primary branch of the building (house) drain is the single sloping drain from the base of a soil or waste stack to its junction with the main building drain or with another branch thereof.

Relief vent.—A relief vent is a branch from the vent stack, connected to a horizontal branch between the first fixture branch and the soil or waste stack, whose primary function is to provide for circulation of air between the vent stack and the soil or waste stack.

Return offset.—A return offset or jumpover is a double offset installed so as to return the pipe to its original line.

Riser.—A riser is a water-supply pipe which extends vertically one full story or more to convey water to branches or fixtures.

Sand interceptor (Sand trap).—A sand interceptor (sand trap) is a watertight receptacle designed and constructed to intercept and prevent the passage of sand or other solids into the drainage system to which it is directly or indirectly connected.

Sanitary sewer.—A sanitary sewer is a sewer designed or used only for conveying liquid or water-borne waste from plumbing fixtures.

Secondary branch.—A secondary branch of the building drain is any branch of the building drain other than a primary branch.

Sewage-treatment plant.—A sewage-treatment plant consists of structures and appurtenances which receive the discharge of a sanitary drainage system, designed to bring about a reduction in the organic and bacterial content of the waste so as to render it less offensive or dangerous, including septic tanks and cesspools. (See par. 101, pt. III.)

Side vent.—A side vent is a vent connecting to the drain pipe through a 45° wye.

Size of pipe and tubing.—The size of pipe or tubing, unless otherwise stated, is the nominal size by which the pipe or tubing is commercially designated. Actual dimensions of the different kinds of pipe and tubing are given in the specifications applying.

Soil pipe.—A soil pipe is any pipe which conveys the discharge of water closets or fixtures having similar functions, with or without the discharges from other fixtures.

Stack.—Stack is a general term for the vertical main of a system of soil, waste, or vent piping.

Stack-vent.—A stack-vent is the extension of a soil or waste stack above the highest horizontal or fixture branch connected to the stack.

Storm drain.—A storm drain is a drain used for conveying rain water, subsurface water, condensate, cooling water, or other similar discharges.

Storm sewer.—A storm sewer is a sewer used for conveying rain water, subsurface water, condensate, cooling water, or other similar discharges.

Subsoil drain.—A subsoil drain is a drain installed for collecting subsurface or seepage

water and conveying it to a place of disposal.

Trap.—A trap is a fitting or device so designed and constructed as to provide a liquid trap seal which will prevent the passage of air through it.

Trap seal.—The trap seal is the vertical distance between the crown weir and the dip of the trap.

Vent.—A vent is a pipe installed to provide a flow of air to or from a drainage system or to provide a circulation of air within such system to protect trap seals from siphonage and back pressure.

Vent stack.—A vent stack, sometimes called a main vent, is a vertical vent pipe installed primarily for the purpose of providing circulation of air to or from any part of the building-drainage system.

Waste pipe.—A waste pipe is a drain pipe which receives the discharge of any fixture other than water closets or other fixtures receiving human excreta.

Water main.—The water (street) main is a water-supply pipe for public or community use.

Water-service pipe.—The water-service pipe is that part of a building main installed by or under the jurisdiction of a water department or company.

Water-supply system.—The water-supply system of a building consists of the water-service pipe, the water-distributing pipes, and the necessary connecting pipes, fittings, and control valves.

Wet vent.—A wet vent is a soil or waste pipe that serves also as a vent.

Yoke vent.—A yoke vent is a vertical or 45° relief vent of the continuous-waste-and-vent type formed by the extension of an upright wye-branch or 45° wye-branch inlet of the horizontal branch to the stack. It becomes a dual yoke vent when two horizontal branches are thus vented by the same relief vent. (See fig. 2, pt. III.)

CHAPTER II. GENERAL REGULATIONS

Sec. 201. Installation of Piping.—Horizontal drainage piping shall be run in practical alinement and shall be supported at intervals not exceeding 10 feet. The minimum slopes shall be as follows: Not less than ¼-inch fall per foot for 1¼- to 2-inch diameters, inclusive; not less than ⅛-inch fall per foot for 2½- to 4-inch diameters, inclusive; not less than 1/16-inch fall per foot for 5- to 8-inch diameters, inclusive; and a slope that will maintain a velocity of at least 2.0 fps in a pipe of 10-inch diameter or larger as computed by the pipe formula given in paragraph 201, part III. Stacks shall be supported at their bases, and shall be rigidly secured. Piping shall be installed without undue stresses or strains, and provision made for expansion, contraction, and structural settlement. No structural member shall be weakened or impaired beyond a safe limit by cutting, notching, or otherwise, unless provision is made for carrying the structural load.

Sec. 202. Changes in Direction.—Changes in direction in drainage piping shall be made by the appropriate use of cast-iron 45° wyes, half wyes, long-sweep quarter bends, sixth, eighth, or sixteenth bends, or by combinations of these fittings, or by use of equivalent fittings or their combinations; except that sanitary tees may be used in vertical sections of drains or stacks, and short quarter bends may be used in drainage lines where the change in direction of flow is from the horizontal to the vertical. Tees and crosses may be used in vent pipes and in water-distributing pipes. No change in direction greater than 90° in a single turn shall be made in drainage pipes.

Sec. 203. Prohibited Fittings.—No double hub, or double-tee branch, shall be used on soil or waste lines. The drilling and tapping of building drains, soil, waste, or vent pipes, and the use of saddle hubs or bands, are prohibited. Any fitting or connection which has an enlargement, chamber, or recess with a ledge, shoulder, or reduction of the pipe area, that offers an obstruction to flow through the drain, is prohibited. (See par. 413, pt. III.)

Sec. 204. Prohibited Connections.—(*a*) No fixture, device, or construction shall be installed which will provide a backflow connection between a distributing system of water for drinking and domestic purposes and a drainage system, soil, or waste pipe so as to permit or make possible the backflow of sewage or waste into the water-supply system.

(*b*) No interconnection or cross-connection shall be made between a water-supply system carrying water meeting accepted standards of

purity and any other water-supply system.

Sec. 205. PROTECTION OF PIPES.—Pipes passing under or through walls shall be protected from breakage. Pipes passing through or under cinder concrete or other corrosive material shall be protected against external corrosion.

No soil or waste stack shall be installed or permitted outside a building or in an exterior wall unless adequate provision is made to protect it from freezing.

Sec. 206. PROTECTION OF ELECTRICAL MACHINERY.—No water or drainage piping shall be located over electrical machinery or equipment unless adequate protection is provided against drip caused by condensation on the piping.

Sec. 207. PROTECTION OF WATER TANKS.—Drainage piping shall not pass directly over water-supply tanks or reservoirs unless such tanks or reservoirs are tightly closed.

Sec. 208. WORKMANSHIP.—Workmanship shall be of such character as fully to secure the results sought in all sections of this manual.

CHAPTER III. QUALITY, WEIGHT, AND THICKNESS OF MATERIALS

Sec. 301. QUALITY OF MATERIALS.—Materials used in any plumbing system, or part thereof, shall meet accepted standards and shall be free from defects.

Refere ces made in the following sections to standards and specifications shall be taken to mean the latest issues thereof. (See par. 301, pt. III, for information about such issues and for similar and equivalent specifications.)

Sec. 302. IDENTIFICATION OF MATERIALS.—Each length of pipe, and each fitting, trap, fixture, and device used in a plumbing system shall be cast, stamped, or indelibly marked with the maker's mark or name; and also with the weight and quality thereof, when this is required in the specification that applies.

Sec. 303. VITRIFIED-CLAY PIPE.—Vitrified-clay pipe shall conform to Federal Specification for Pipe; Clay, Sewer.

Sec. 304. CONCRETE PIPE.—Concrete pipe shall conform to Federal Specification for Pipe; Concrete, Non-Pressure, Non-Reinforced and Reinforced.

Sec. 305. CAST-IRON SOIL PIPE.—Cast-iron soil pipe and fittings (calked joints) shall conform to Federal Specification for Pipe and Pipe-Fittings; Soil, Cast-Iron, provided that, when approved by the authority having jurisdiction over plumbing, lighter pipe and fittings of equal quality may be used.

Sec. 306. CAST-IRON WATER PIPE.—Cast-iron water pipe shall conform to Federal Specification for Pipe; Water, Cast-Iron (Bell and Spigot and Bolted Joint).

Sec. 307. CAST-IRON SCREWED PIPE.—Cast-iron screwed pipe shall conform to Federal Specification for Pipe, Cast-Iron; Drainage, Vent, and Waste (Threaded).

Sec. 308. WROUGHT-IRON PIPE.—Wrought-iron pipe shall conform to Federal Specification for Pipe; Wrought-Iron, Welded, Black and Galvanized.

Sec. 309. STEEL PIPE.—Steel pipe shall conform to Federal Specification for Pipe; Steel, Seamless and Welded, Black and Zinc-Coated.

Sec. 310. BRASS AND COPPER PIPE.—Brass and copper pipe (I. P. S.) shall conform to Federal Specifications for Pipe, Brass, Seamless, Iron-Pipe-Size, Standard and Extra-Strong; and for Pipe, Copper, Seamless, Iron-Pipe-Size, Standard, respectively.

Sec. 311. BRASS TUBING.—Brass tubing for fixture connections and fittings shall conform to Federal Specification for Plumbing Fixtures; (for) Land Use.

Sec. 312. COPPER TUBING.—Copper tubing for use with flared or soldered fittings shall conform to Federal Specification for Tubing; Copper, Seamless (for Use with Soldered or Flared Fittings) (types K, L, and M). Copper tubing for use with flanged fittings or with silver-brazed joints shall conform to Federal Specification for Tubing, Copper, Seamless (for General Use with I. P. S. Flanged Fittings) (types A, B, C, and D).

Sec. 313. LEAD PIPE.—Lead pipe shall conform to accepted standards. (See table 313–III, pt. III.)

Sec. 314. SHEET LEAD.—Sheet lead shall conform to Federal Specification for Lead; Sheet, and shall weigh not less than 4 pounds per square foot.

Sec. 315. CALKING LEAD.—Calking lead shall conform to Federal Specification for Lead, Calking.

Sec. 316. Sheet Copper and Brass.—Sheet copper and brass shall conform to Federal Specifications for Copper; Bars, Plates, Rods, Shapes, Sheets, and Strips, and for Brass, Commercial; Bars, Plates, Rods, Shapes, Sheets, and Strips, respectively, and shall be not lighter than No. 18 AWG (Brown & Sharpe gage).

Sec. 317. Zinc-Coated (Galvanized) Sheet Iron and Steel.—Zinc-coated (galvanized) sheet iron and steel shall conform to Federal Specification for Iron and Steel; Sheet, Black and Zinc-Coated (Galvanized); and shall be not lighter than the following AWG (Brown & Sharpe gage):

No. 26 for 2- to 12-inch pipe.
No. 24 for 13- to 20-inch pipe.
No. 22 for 21- to 26-inch pipe.

Sec. 318. Screwed Fittings.—(*a*) Screwed fittings shall be of cast iron, malleable iron, or brass. Cast-iron fittings shall conform to Federal Specification for Pipe Fittings; Cast-Iron (Threaded). Malleable-iron fittings shall conform to Federal Specification for Pipe-Fittings; Malleable-Iron (Threaded). Brass fittings shall conform to Federal Specification for Pipe-Fittings; Brass or Bronze (Threaded), 125-lb.

(*b*) Drainage fittings shall be of cast iron, malleable iron, or brass. Cast-iron fittings shall conform to Federal Specification for Pipe-Fittings; Cast-Iron, Drainage. Malleable-iron and brass fittings shall conform to the applicable requirements of the same specification.

Sec. 319. Soldered Fittings.—Soldered fittings shall conform to American Standards Association Standard for Soldered-Joint Fittings.

Sec. 320. Calking Ferrules.—Brass calking ferrules shall be of the best quality cast red brass of approved weights and dimensions (see table 320–III, pt. III). Iron-body ferrules shall conform to Federal Specification for Pipe and Pipe-Fittings; Soil, Cast-Iron.

Sec. 321. Soldering Nipples and Bushings.—(*a*) Soldering nipples shall be of red brass pipe, iron-pipe size, or of heavy cast red brass of approved weights. (See table 321 (*a*)–III, pt. III.)

(*b*) Soldering bushings shall be of red brass pipe, iron-pipe size, or of heavy cast red brass.

Sec. 322. Floor Flanges.—Floor flanges for plumbing fixtures shall conform to Federal Specification for Plumbing Fixtures; (for) Land Use.

Sec. 323. Packing.—Packing for hub-and-spigot joints shall conform to Federal Specification for Packing; Jute, Twisted.

Sec. 324. Setting Compound.—Setting compound for connecting fixtures to floor flanges shall conform to Federal Specification for Compound; Plumbing-Fixture-Setting.

Sec. 325. Gaskets.—Gaskets for connecting fixtures to floor flanges shall conform to Federal Specification for Gaskets; Plumbing-Fixture-Setting.

Sec. 326. Alternate Materials.—Any material other than that specified in this manual which the authority having jurisdiction over plumbing approves may be used.

CHAPTER IV. JOINTS AND CONNECTIONS

Sec. 401. Tightness.—Joints and connections shall be made gastight and watertight.

Sec. 402. Vitrified-Clay and Concrete Pipe.—Joints in vitrified-clay and concrete pipe, or between such pipe and metals, shall be hot-poured or cemented joints. Hot-poured joints shall be packed with approved packing and filled with an approved jointing compound at one pouring (see par. 402, pt. III). Cemented joints shall be packed with approved packing and secured with portland cement (see par. 402, pt. III).

Sec. 403. Calked Joints.—Calked joints shall be firmly packed with approved packing, secured with well-calked lead, not less than 1 inch deep; and no paint, varnish, or putty shall be permitted until after the joint is tested.

Sec. 404. Screwed Joints.—Screwed joints shall be made with a lubricant on the male thread only. All burrs or cuttings shall be removed.

Sec. 405. Joints in Cast-Iron Pipe.—Joints in cast-iron pipe may be either calked or screwed and shall be made as required in this chapter.

Sec. 406. Joints Between Cast-Iron and Other Piping.—Joints between cast-iron and wrought-iron, steel, or brass piping may be either screwed or calked joints made as required

in this chapter. The end of threaded pipe for calking shall have a ring or half coupling screwed on to form a spigot end.

Sec. 407. Wiped Joints.—Wiped joints in lead pipe, or between lead pipe and brass or copper pipes, ferrules, soldering nipples, bushings, or traps, in all cases on the sewer side of the trap and in concealed joints on the inlet side of the trap, shall be full-wiped joints, with an exposed surface of the solder on each side of the joint not less than three-quarters of an inch, and a minimum thickness at the thickest part of the joint of not less than three-eighths of an inch. Where a round joint is made, a thickness of not less than ⅜ of an inch for bushings and flange joints shall be provided.

Sec. 408. Joints Between Lead and Other Piping.—Joints between lead and cast-iron, steel, or wrought-iron piping shall be made by means of a calking ferrule, soldering nipple, or bushing.

Sec. 409. Joints in Copper Tubing.—Copper-tubing joints shall be made in accordance with approved practice. (See par. 409, pt. III.)

Sec. 410. Slip Joints and Unions.—Slip joints and unions shall be used only in trap seals or on the inlet side of the trap, except that expansion joints of approved type may be permitted. Unions on the sewer side of the trap shall be ground faced, and shall not be concealed or enclosed.

Sec. 411. Roof Flashings.—Joints at the roof shall be made watertight by use of copper, lead, or zinc-coated (galvanized) iron flashings, cast-iron plates, or other approved materials.

Sec. 412. Floor Connections.—Floor connections for water-closets and other fixtures shall be made by means of an approved brass or cast-iron floor flange soldered securely or calked to the drain pipe. The joint between the fixture and floor flange shall be made tight by means of an approved fixture-setting compound or gasket.

Sec. 413. Increasers and Reducers.—Where different sizes of drainage pipes or pipes and fittings are to be connected, proper sizes of standard increasers and reducers shall be employed. Reduction of size of drain pipes in the direction of flow is prohibited, except as indicated in paragraph 413, part III.

Sec. 414. Supports.—Connections of wall hangers, pipe supports, or fixture settings to masonry or concrete backing shall be made with approved bolts without the use of wooden plugs.

CHAPTER V. TRAPS AND CLEAN-OUTS

Sec. 501. Types and Sizes of Traps.—Every trap shall be self-cleaning, shall be of the same nominal size as the drain to which it is connected, and shall conform to accepted standards. (See par. 501, pt. III.)

The minimum size (nominal inside diameter) of trap and fixture drain for a given fixture shall be not less than shown in the following table:

Fixture:	*Size of trap and fixture drain, inches*
Bathtubs	1½
Combination fixtures	1½
Drinking fountains	1¼
Floor drains	2
Laundry trays	1½
Lavatories	1¼
Shower stalls	2
Sinks, kitchen, residence	1½
Sinks, hotel or public	2
Sinks, small, pantry or bar	1¼
Sinks, dishwasher	1½
Sinks, service	2
Urinals, trough	2
Urinals, stall	2

For water closets and other fixtures with integral traps, the fixture drains shall be not smaller than the fixture-trap outlet. (See par. 501, pt. III.)

Sec. 502. Prohibited Traps.—No form of trap which depends for its seal upon the action of movable parts, or partitions that cannot be exposed for inspection, except in a trap integral with a fixture, shall be used for fixtures. No fixture shall be double-trapped. (See par. 502, pt. III.)

Sec. 503. Traps Required.—Each fixture shall be separately trapped by an approved trap placed as near to the fixture as possible or integral therewith, except that a set of not more than three fixtures such as lavatories or laundry trays, or a set of two laundry trays and one sink, may connect with a single trap, provided the trap for three fixtures is placed centrally. (See fig. 3, pt. III.)

Sec. 504. Trap Seal.—Each fixture trap shall have a water seal of not less than 2 inches and not more than 4 inches. (See fig. 4, pt. III.)

Sec. 505. Trap Clean-Outs.—Each trap, except those in combination with fixtures in which the trap seal is plainly visible and accessible, shall be provided with an approved clean-out plug conforming to Federal Specification for Plumbing Fixtures; (for) Land Use.

Sec. 506. Installation of Traps.—Traps shall be set true with respect to their water seals and protected from freezing.

Sec. 507. Pipe Clean-Outs.—Pipe clean-outs, ferrules, and plugs shall conform to Federal Specification for Pipe and Pipe-Fittings; Soil, Cast-Iron.

Sec. 508. Pipe Clean-Outs Required.—Accessible clean-outs shall be provided at or near the foot of each vertical waste or soil stack and each inside leader that connects to the building drain, and at each change in direction of the building drain greater than 45°. The distance between clean-outs in horizontal soil lines shall not exceed 50 feet. Clean-outs shall be of the same nominal size as the pipes up to 4 inches and not less than 4 inches for larger pipes.

Sec. 509. Clean-Out Equivalents.—Any floor or wall connection of fixture traps when bolted or screwed to the floor or wall shall be regarded as a pipe clean-out.

Sec. 510. Accessibility of Traps and Clean-Outs.—Underground traps and clean-outs of a building, except where clean-outs are flush with the floor, and exterior underground traps that are not readily accessible shall be made accessible by manholes with proper covers.

Sec. 511. Grease Interceptors.—Grease interceptors shall be installed when required by and in accordance with the regulations of the authority having jurisdiction over plumbing.

Sec. 512. Oil Interceptors.—Oil interceptors shall be installed when required by and in accordance with the regulations of the authority having jurisdiction over plumbing.

Sec. 513. Sand Interceptors.—Sand interceptors, when installed, shall be so designed and placed as to be readily accessible for cleaning.

Sec. 514. Floor Drains.—Floor and area drains shall conform to Federal Specification for Plumbing Fixtures; (for) Land Use, where applicable.

Sec. 515. Backwater Valves.—Backwater valves shall have all bearing parts of corrosion-resisting metal, and be so constructed as to provide a positive mechanical seal against backwater. The area of valve seat shall be equal to the cross-sectional area of the pipe connection.

CHAPTER VI. WATER SUPPLY AND DISTRIBUTION

Sec. 601. Quality of Water.—The quality of the water supply to each building shall meet accepted standards of purity. Development of private sources of supply shall be in accordance with approved practice. (See par. 601, pt. III.)

Sec. 602. Protection of Water Supply.—

(*a*) Potable and nonpotable water supplies shall be distributed through systems entirely independent of each other.

(*b*) Water pumps, wells, hydrants, filters, softeners, appliances, and devices shall be protected from surface water and outside contamination by approved covers, walls, or copings.

(*c*) Potable water-supply tanks, whether storage, pressure, or suction tanks, shall be properly covered to prevent entrance of foreign material into the water supply. (See also sec. 207.)

(*d*) Every supply outlet or connection to a fixture or appliance shall be protected from backflow by means of an approved air gap or backflow preventer between the control valve of the outlet and the fixture or appliance. (See par. 602 (*d*), pt. III.)

Sec. 603. Protection From Freezing.—Water pipes, storage tanks, flushing cisterns, and appliances, when subject to freezing temperatures, shall be protected. Water pipes underground shall be placed below freezing level, or shall be otherwise insulated to protect them from freezing. Interior piping shall be insulated, when necessary, for protection.

Sec. 604. Size of Building Main.—The building main, including the water-service pipe, shall be of sufficient size to permit a continuous ample flow of water to the building under the average daily minimum service pressure in the street main. The required size for each building shall be determined by the rules given in paragraph 604, part III. No building main of less than ¾-inch diameter shall be installed. If

flush valves are installed, the building main shall be of not less than 1-inch diameter.

Sec. 605. Quantity of Water.—Plumbing fixtures shall be provided with a sufficient supply of water for flushing and keeping them in a sanitary condition.

Sec. 606. Size of Fixture Branches.—The minimum size of fixture branches and other supply outlets shall be as follows:

	Inch
Sill cocks	½
Domestic water heaters	½
Laundry trays	½
Sinks	½
Lavatories	⅜
Bathtubs	½
Water-closet tanks	⅜
Water-closet flush valves	1
Flush valves for pedestal urinals	1
Flush valves for wall or stall urinals	½

Sec. 607. Shut-Offs.—Accessible shut-offs with drains shall be provided on the building main and on branches for each dwelling unit and in freezing climates for each outdoor connection. Additional shut-offs may be installed.

Sec. 608. Material for Water Piping and Tubing.—Material for building water-supply pipes and tubes shall be of brass, copper, cast or wrought iron, lead, or steel, with approved fittings. All threaded ferrous pipe and fittings shall be galvanized (zinc-coated). No pipe, tubing, or fittings that have been previously used shall be used for distributing water except for replacement in the same system.

Lead piping in water-supply lines shall not be used unless it has been definitely determined that no poisonous lead salts are produced by contact of lead with the particular water supply.

Sec. 609. Relief Valves.—An approved relief valve shall be installed in each hot-water system and so located that there is no shut-off or check valve between the tank and the relief valve.

CHAPTER VII. PLUMBING FIXTURES

Sec. 701. Quality of Fixtures.—Plumbing fixtures shall conform to accepted standards. (See par. 701, pt. III.)

Sec. 702. Installation of Fixtures.—Plumbing fixtures shall be installed in a manner to afford access for cleaning. Where practicable, pipes from fixtures shall be run to the wall, and no lead trap or lead pipe shall extend nearer to the floor than 12 inches unless protected by casing.

Sec. 703. Frostproof Closets.—Frostproof closets may be installed only in compartments which have no direct access to a building used for human habitation or occupancy. The soil pipe between the hopper and the trap shall be of not less than 3-inch diameter and shall be of lead, or cast iron enameled on the inside. The waste tube from the valve shall not be connected to the soil pipe or sewer.

Sec. 704. Floor Drains.—A floor drain or a shower drain shall be considered a fixture and provided with a strainer.

Sec. 705. Fixture Strainers. — Fixtures other than water closets and pedestal and blowout urinals shall be provided with approved strainers. (See par. 705, pt. III.)

Sec. 706. Fixture Overflow.—The overflow pipe from a fixture shall be connected on the inlet side of the trap and be so arranged that it may be cleaned.

Sec. 707. Swimming Pools. — Swimming pools shall be constructed in accordance with accepted practice. (See par. 707, pt. III.)

Sec. 708. Miscellaneous Fixtures.—Baptistries, ornamental and lily ponds, aquaria, ornamental fountain basins, and similar constructions shall have supplies thereto protected from backflow as required in section 602.

Sec. 709. Ventilation.—No plumbing fixtures shall be located in any room not provided with proper ventilation. Ventilating pipes from toilet rooms shall form an independent system.

CHAPTER VIII. SOIL AND WASTE PIPES FOR SANITARY SYSTEMS [2]

Sec. 801. Materials.—(*a*) Soil and waste piping for sanitary drainage systems within a building shall be of brass, copper, iron, steel, or lead.

(*b*) The building drain when underground shall be of cast iron.

(*c*) The building sewer shall be of cast iron, vitrified clay, or concrete.

Sec. 802. Minimum Sizes.—The minimum required sizes of soil and waste pipes, depending

[2] See par. 800, pt. III, for acid wastes.

on location and conditions of service, shall be in accordance with the following sections and tables of this chapter and the principles, rules, and tables relating to drains and sewers in part III. (See par. 802, pt. III.)

Sec. 803. FIXTURE UNITS. — The following table of fixture-unit values designating the relative load weights of different kinds of fixtures shall be employed in estimating the total load carried by a soil or waste pipe and shall be used in connection with tables of size for waste and drain pipes in which the permissible load is given in terms of fixture units.

TABLE 803.—*Fixture units per fixture or group* [1]

Fixture and type of installation	Number of fixture units
Lavatory or washbasin:	
Public	2
Private	1
Water closet:	
Public	10
Private	6
Bathtub, public	4
Shower head:	
Public	4
Private	2
Pedestal urinal, public	10
Wall or stall urinal, public	5
Service sink [2]	3
Kitchen sink, private [2]	2
Bathtub, private	2
Bathroom group, private	8
Bathroom group with separate shower stall, private	10
Two or three laundry trays with single trap, private [2]	3
Combination sink and laundry tray, private [2]	3
Sewage ejector or sump pump, for each 25 gpm	50

[1] See par. 803, pt. III for fixture-unit weights not included in table 803.
[2] These fixtures and groups may be omitted in determining the total fixture units to be applied for soil pipes but the fixture-unit weights assigned must be applied for separate waste lines for groups of these fixtures.

Sec. 804. STACKS TO BE VERTICAL.—Soil and waste stacks shall extend in a vertical line from the highest to the lowest horizontal branch or fixture branch connected thereto, except as provided for in section 806, and shall be vented in accordance with the requirements of chapter X.

Sec. 805. SIZE OF SOIL AND WASTE PIPES.—(*a*) Except as provided in (*b*) of this section, the total number of fixture units installed on a soil or waste stack or horizontal branch of given diameter shall be in accordance with table 805. No soil or waste stack shall be smaller than the largest horizontal branch connected thereto.

(*b*) If the total fixture units are distributed on horizontal branches in three or more branch intervals of the stack, the total number of fixture units on a straight soil or waste stack of a given diameter may be increased from the values given in table 805 within the limits of table 805(*b*)–III, part III, provided the maximum fixture units for one branch interval as computed in accordance with table 805(*b*)–III is not exceeded in any branch interval of the system.

TABLE 805.—*Permissible number of fixture units on horizontal branches and stacks*

Diameter of pipe (inches)	Fixture units on 1 horizontal branch	Fixture units on 1 stack
	Number	*Number*
1¼	1	2
1½	3	4
2	6	10
3 waste only	32	48
3 soil	20	30
4	160	240
5	360	540
6	640	960
8	1,200	2,240
10	1,800	3,780
12	2,800	6,000

Sec. 806. OFFSETS.—(*a*) A single offset, a double offset, or a return offset, with no change in direction greater than 45°, may be installed in a soil or waste stack with the stack and branches vented as required for a straight stack, provided that the total number of fixture units on such stack does not exceed one-half the limit permitted by section 805(*a*) and table 805, and no horizontal branch connects to the stack in or within 4 diameters (stack) above or below a sloping section of the offset.

(*b*) If an offset is made at an angle greater than 45°, the required diameter of that portion of the stack above the offset shall be determined as for a separate stack. The diameter of the offset including fittings shall be determined as for a primary branch, and the portion above the offset shall be considered as a horizontal branch in determining the diameter of that portion of the stack below the offset. A relief vent shall be installed in accordance with the requirements of section 1017 at the offset or between it and the next lower horizontal branch.

(*c*) An offset above the highest horizontal branch in a soil or waste stack system is an offset in the stack-vent and shall not be considered in this connection other than as to its effect on the developed length of vent.

(*d*) In case of an offset in a soil or waste stack below the lowest horizontal branch, no

270988°—40——3

change in diameter of the stack because of the offset shall be required if it is made at an angle of not greater than 45°. If such an offset is made at an angle greater than 45°, the required diameter of the offset and the stack below it shall be determined as for a primary branch.

Sec. 807. HORIZONTAL AND PRIMARY BRANCHES.—(*a*) The required sizes of horizontal branches and primary branches of the building drain shall be in accordance with table 807, except that the permissible number of fixture units on primary branches as given in table 807 may be increased as provided for in section 807(*d*).

TABLE 807.—*Capacities of horizontal branches and primary branches of the building drain*

Diameter of pipe (inches)	Permissible number of fixture units				
	Horizontal branch at minimum permissible slope or greater	Primary branch [1]			
		1/16-inch fall per foot	1/8-inch fall per foot	1/4-inch fall per foot	1/2-inch fall per foot
	Number	*Number*	*Number*	*Number*	*Number*
1¼	1			2	2
1½	3			5	7
2	6			21	26
3 waste only	32		36	42	50
3 soil	20		24	27	36
4	160		180	216	250
5	360	360	400	480	560
6	600	600	660	790	940
8	1,200	1,400	1,600	1,920	2,240
10	1,800	2,400	2,700	3,240	3,780
12	2,800	3,600	4,200	5,000	6,000

[1] See par. 807, pt. III, for method of computing permissible number of fixture units for other slopes than those given in this table.

(*b*) In case the sanitary system consists of one soil stack only or of one soil stack and one or more waste stacks of less than 3-inch diameter, the building drain and building sewer shall be of the same nominal size as the primary branch from the soil stack as given by table 807, except that (*d*) of this section and the applicable rules in paragraph 807, part III, relating to pressure drainage may apply when the prescribed conditions are complied with.

(*c*) In case the plumbing system has two or more soil stacks each having its separate primary branch or has one or more soil stacks and one or more waste stacks of 3-inch diameter or larger, each soil and waste stack having its separate primary branch, the number of fixture units for a secondary branch, the main building drain, or the building sewer of a given diameter and slope may be increased from the value given in table 807 for a primary branch of the same diameter and slope to the value given in table 807(*c*), part III, of this manual, provided that the increase is made strictly within the principles and rules of paragraph 807, part III.

(*d*) In case there is no fixture drain or horizontal branch connecting directly with the building drain or a branch thereof and the lowest fixture branch or horizontal branch connected to any soil or waste stack of the system is 3 feet or more above the grade line of the building drain, the permissible number of fixture units on primary branches, secondary branches, main building drain, and building sewer, may be increased within the limits given by table 807(*d*), part III, provided the increases are made in accordance with the principles and rules given in paragraph 807, part III.

(*e*) The provisions of sections 807(*c*) and 807(*d*) shall not apply unless plans drawn to scale showing the proposed installation in detail in regard to the diameter, direction, length, and slope of the building drain and its branches and of the building sewer have been submitted to and approved by the authority having jurisdiction over plumbing.

Sec. 808. SUMPS AND RECEIVING TANKS.—All building subdrains shall discharge into an airtight sump or receiving tank so located as to receive the sewage by gravity, from which sump or receiving tank the sewage shall be lifted and discharged into the building sewer by pumps, ejectors, or any equally efficient method. Such sumps shall either be automatically discharged or be of sufficient capacity to receive the building sewage and wastes for not less than 24 hours.

CHAPTER IX. STORM DRAINS

Sec. 901. GENERAL.—Roofs and paved areas, yards, courts, and courtyards shall be drained into the storm-sewerage system or the combined sewerage system, but not into sewers intended for sanitary sewage only. When connected with a combined sewerage system, storm drains, the intakes of which are within 12 feet of any door, window, or ventilating opening, if not at least 3 feet higher than the top of such opening, shall be effectively trapped. One trap on the main storm drain may serve for all such

connections. Traps shall be set below the frost line or on the inside of the building. Where there is no sewer accessible, storm drainage shall discharge into the public gutter, unless otherwise permitted by the proper authorites, and in such case need not be trapped.

Sec. 902. Leaders and Gutters.—(*a*) Leaders, when placed within the walls of a building or run in a vent or pipe shaft, shall be of cast-iron, zinc-coated (galvanized) wrought-iron or steel, brass, copper, or lead pipe, or of copper tubing.

(*b*) Outside leaders may be of sheet metal. When of sheet metal and connected with a building storm drain or storm sewer, they shall be connected to a cast-iron drain extending not less than 1 foot above the finish grade. A sheet-metal leader along a public driveway without sidewalk shall be properly protected against injury.

(*c*) Roof gutters shall be of metal or other materials suitable for forming an effective open channel for collecting water and conducting it to the leaders and suitable for making a tight connection with the leaders. (See par. 902, pt. III.)

Sec. 903. Size of Storm Drains and Leaders.—(*a*) Storm drains of a building shall be of ample size to convey the estimated storm water from the roof gutters to the street sewer or other approved place of discharge without overflow and without producing dangerously high pressures in any building drain or leader. The estimated flow shall be based on the maximum expected rate of rainfall and estimated rate of flow of storm sewage from other sources. The tables in this section pertaining to leaders and building storm drains are based on the horizontal projection of the roof area, a rate of rainfall of 4 inches per hour and limited slopes as indicated in the tables. (See par. 903, pt. III, for methods of computing the requirements for conditions not covered by or in these tables.)

(*b*) The area drained into or by a vertical leader or a sloping leader or connecting pipe having a slope of ½-inch fall per foot or greater shall not exceed the values given in table 903(*b*).

(*c*) The roof area drained into a building storm sewer or into a main storm drain or any of its branches shall not exceed the values given in table 903(*c*).

Table 903(*b*).—*Maximum roof area for leaders*

Diameter of leader or pipe	Maximum roof area
Inches	*Square feet*
2	500
2½	960
3	1, 500
[a] 3½	2, 200
4	3, 100
5	5, 400
6	8, 400
8	17, 400

[a] Drainage fittings are not generally available.

Table 903(*c*).—*Maximum roof area for building storm sewers or drains*

Diameter of pipe (inches)	Maximum roof area for drains of various slopes			
	1/16-inch fall per foot	⅛-inch fall per foot	¼-inch fall per foot	½-inch fall per foot
	Square feet	*Square feet*	*Square feet*	*Square feet*
2	------	------	350	500
[a] 2½	------	480	670	960
3	------	750	1, 050	1, 500
[a] 3½	------	1, 100	1, 550	2, 200
4	------	1, 550	2, 150	3, 100
5	1, 800	2, 700	3, 600	5, 400
6	3, 000	4, 200	6, 000	8, 400
8	5, 900	8, 700	11, 900	17, 400
10	9, 800	15, 200	19, 600	30, 400
12	15, 900	24, 700	31, 800	49, 400

[a] 2½-inch and 3½-inch cast-iron soil pipe and fittings and 3½-inch drainage fittings are not generally available.

(*d*) Roof area or drained area as applying in the preceding tables of this section shall be the horizontal projection of the area, except that where a building wall extends above the roof or court in such a manner as to drain onto the roof or court, due allowance for the additional run-off shall be made. (See par. 903(*d*), pt. III, for methods of computing allowance.)

Sec. 904. Separate and Combined Drains.—(*a*) The sanitary- and storm-drainage systems of a building shall be entirely separate, except that where a combined sanitary-and-storm street sewer is available the storm drains may connect to a combined sanitary-and-storm building drain or sewer at least 10 feet downstream from any primary branch of the sanitary system. Connections between the sanitary and storm systems shall be made at the same grade by means of a single wye fitting. (See par. 904, pt. III, for explanation of this requirement.)

(*b*) Up to the point of combining into one system, the sizes of the storm and sanitary

branches shall be as required for separate storm and sanitary systems.

In the case of a combined sanitary-and-storm building drain or sewer, or of a branch formed by the junction of a single storm drain or sewer and a single sanitary drain or sewer when neither the storm nor the sanitary drain carries more than one-half of its allowable load as given in table 903(*c*), part II, and table 807(*c*)–III, part III, the diameter of the combined drain or combined sewer shall be at least equal to that of the larger of the two branches emptying into it, except that in no case shall a combined sanitary-and-storm building drain or building sewer be less than 4 inches in diameter. If either or both of the storm or sanitary branch drains carry more than one-half the allowable load, the combined drain or combined building sewer shall be in accordance with table 904–III and rules of paragraph 904, part III.

Sec. 905. Closed System Required.—When connected with a combined sanitary-and-storm sewerage system, the building storm-drainage piping shall form a closed system with water-tight joints, except for its outlet and intake openings.

Sec. 906. Overflow Pipes.—Overflow pipes from cisterns, supply tanks, expansion tanks, and drip pans shall connect with any building sewer, building drain, or soil pipe only by means of an indirect connection.

Sec. 907. Subsoil Sumps.—Subsoil drains below the main-sewer level shall discharge into a sump or receiving tank, the contents of which shall be automatically lifted and discharged into the drainage system through a properly trapped fixture or drain.

Sec. 908. Construction of Subsoil Drains.—Where subsoil drains are placed under the cellar floor or used to encircle the outer walls of a building, they shall be made of open-jointed drain tile or earthenware pipe, not less than 4 inches in diameter. When the building drain is subject to backwater the subsoil drain shall be protected by an accessibly located automatic back-pressure valve before entering the building sewer or drain. If such drains are connected with the sanitary sewer or with a combined system they shall be properly trapped. They may discharge to an area drain.

CHAPTER X. VENTS AND VENTING

Sec. 1001. Material.—Vent pipes or tubing shall be of cast iron, zinc-coated (galvanized) wrought iron or steel, brass, copper, or lead.

Sec. 1002. Protection of Trap Seals.—The seal of every fixture trap in a plumbing system shall be adequately protected by a properly installed vent or system of venting. A stack-vent, back vent, relief vent, dual vent, circuit or loop vent, or a combination of two or more of these forms installed in the manner and within the limitations specified in sections 1006 to 1012, inclusive, shall be considered as adequate protection of trap seals in the sense of this section. (See par. 1002, pt. III.)

Sec. 1003. Stack-Vents Required.—Every soil or waste stack shall be extended vertically as a stack-vent to at least 6 inches above the highest horizontal branch and then to the open air above the roof or otherwise terminated in the open air outside the building; or the stack-vent and vent stack may be connected together within the building at least 6 inches above the flood level of the highest fixture, with a single extension from the connection to the open air.

Sec. 1004. Vent Stacks Required.—A vent stack or main vent shall be installed with a soil or waste stack whenever relief vents, back vents, or other branch vents are required in two or more branch intervals. The vent stack shall terminate independently in the open air outside the building or may be connected with the stack-vent as prescribed in section 1003, and shall connect with the soil or waste stack through, at, or below the lowest horizontal branch or with the primary branch of the building drain.

Sec. 1005. Distance of Trap From Vent.—Except as provided for particular fixtures and forms of construction in sections 1010 and 1011, and excepting water closets, pedestal urinals, trap-standard service sinks, and other fixtures which depend on siphon action for the proper functioning of the fixture, each fixture trap shall have a protecting vent located so that the total fall in the fixture drain from the trap weir to the vent fitting is not more than 1 pipe diameter, and the developed length of drain from trap weir to vent fitting is not less than 2 nor more than 48 pipe diameters. A back vent or

relief vent, preferably in the form of a continuous-waste-and-vent, shall be installed within these limits as may be necessary for compliance with this requirement. (See par. 1005, and fig. 13, pt. III.)

Sec. 1006. Dual Vents Permitted.—A dual vent for two fixture traps installed as a vertical continuous-waste-and-vent, or a stack-vent in a dual capacity, may be employed under the following conditions and no additional vents for the traps thus vented shall be required:

(*a*) When both fixture drains connect with a vertical drain or stack at the same level, and the developed length and total fall of each of the two fixture drains are within the limits given in section 1005. (See fig. 14A, pt. III.)

(*b*) When the two fixture drains connect with the vertical drain or stack at different levels, the difference in level of the two connections is not greater than five times the diameter of the vertical section of drain or stack, the diameter of the vertical section or stack up to and including the higher connection is not less than that required for the horizontal drain for both fixtures, the cross-section of the higher of the two fixture drains is not greater than one-half that of the vertical drain, and the developed length and total fall of each of the two fixture drains is within the limits given in section 1005. (See fig. 14B, pt. III.)

Sec. 1007. Group Vents Permitted.—(*a*) A lavatory trap and a bathtub or shower-stall trap may be installed on the same horizontal branch with a back vent for the lavatory trap and with no back vent for the bathtub or shower-stall trap, provided the vertical section of the lavatory drain is of not less than 1½-inch diameter, connects with the tub or shower-stall drain in a vertical plane, and the developed lengths of both fixture drains are within the limits given in section 1005. (See fig. 15A, pt. III.)

(*b*) Two lavatory traps and two bathtub or shower-stall traps may be installed on the same horizontal branch with a dual vent for the lavatory traps and with no back vents for the bathtub or shower-stall traps, provided that the horizontal branch, except the separate fixture drains, shall be at least 2 inches in diameter and the fixture drains for bathtubs or shower stalls connect as closely as practicable upstream from the vent by means of a drainage wye. (See fig. 15B, pt. III.)

(*c*) A lavatory trap, kitchen-sink trap, and a bathtub or shower-stall trap may be installed on the same horizontal branch, as in (*a*), provided the dual vent for the lavatory and sink traps is installed in accordance with section 1006. (See fig. 15C, pt. III.)

Sec. 1008. Yoke and Relief Vents.—Bathroom groups, each consisting of a water closet, lavatory, and a shower stall or bathtub with or without shower head, may be installed on a soil stack with any of the following forms of group venting:

(*a*) Two bathroom groups, or one bathroom group and kitchen sink or kitchen-sink-and-tray combination, may be installed in the highest branch interval of the soil stack or on a vertical yoke-vented branch not less than 3 inches in diameter with no branch vents other than the yoke vent, provided each fixture drain connects independently to the soil stack or with the water-closet drain (closet bend) in the highest branch interval and each fixture drain in all except the highest branch interval connects independently with the yoke-vented branch or with the water-closet drains (closet bends) within the limits given in section 1005. (See fig. 16, pt. III.)

(*b*) One bathroom group with group venting in accordance with section 1007(*a*) and with the horizontal branch connected to the soil stack at the same level as the water-closet drain or connected to the water-closet drain (closet bend), or a bathroom group and kitchen sink with connections to the stack in the same manner and with group venting in accordance with section 1007(*c*), may be installed in the same branch interval of a soil stack within the limits of permissible fixture units for one soil stack and branch intervals (sec. 805(*b*)), provided that a relief vent is installed from the water-closet branch drain in the third branch interval from the top and in each lower branch interval. (See fig. 19, pt. III.)

(*c*) Two bathroom groups with group venting in accordance with section 1007(*a*) or 1007(*b*), or two bathroom groups and two kitchen sinks with group venting in accordance with section 1007(*c*), may be installed in the same branch interval of a soil stack, provided

a relief vent is installed for the second and lower branch intervals from the top. (See figs. 18 and 20, pt. III.)

(*d*) In all cases the relief vent required under (*a*), (*b*), or (*c*), may be a dual vent and the size shall be in accordance with section 1015. Fittings that combine the effects of two or more standard fittings in one casting may be permitted. (See also par. 1008 and figs. 13 to 20, pt. III.)

Sec. 1009. Circuit Vents and Loop Vents.—(*a*) A group of fixtures in line (battery) on the same floor or level may be installed on one horizontal branch with a circuit or loop vent connected to the horizontal branch in front of the last fixture drain, within the limits given in table 1009(*a*), provided relief vents connected to the horizontal branch in front of the first fixture drain are installed as follows:

In each branch interval, if the total fixture units installed in the branch exceeds one-half the number given in table 1009(*a*), except that no relief vent shall be required in the highest branch interval of the system or in any branch interval if the total number of fixture units on the stack above the horizontal branch does not exceed the limits for one stack given in table 805 and the number of fixtures on the circuit- or loop-vented horizontal branch does not exceed two for a 2- or 3-inch horizontal branch or does not exceed one-half the permissible number in column 2 of table 1009(*a*) for 4-inch and larger horizontal branches. A dual relief vent for two circuit- or loop-vented horizontal branches in the same branch interval may be installed.

Table 1009(*a*).—*Limits for circuit and loop venting*

(1) Diameter of horizontal branch	(2) Water closets, pedestal urinals, or trap-standard fixtures	(3) Fixture units for fixtures other than designated in column 2
Inches	*Number*	*Number*
2	None	6
3	2	20
4	8	60
5	16	120
6	24	180

(*b*) The limits for circuit- or loop-vented horizontal branches may be increased to one and one-half times the values given in table 1009(*a*) for 3-inch and larger branches when relief vents are installed so that there is a relief vent inside the first fixture drain, the number of fixtures or fixture units outside the last relief vent does not exceed the limits given in columns 2 and 3 of table 1009(*a*), and the number of fixture drains between any two successive relief vents does not exceed two for a 3-inch, three for a 4-inch, five for a 5-inch, or eight for a 6-inch or larger horizontal branch.

(*c*) Two lines of fixtures back-to-back (double battery) shall not be circuit- or loop-vented on one branch, but each line may be installed on a separate branch and circuit- or loop-vented. (See figs. 21 and 22, pt. III.)

Sec. 1010. Vents for Flat-Bottomed Fixtures.—The trap and fixture drain not exceeding 2 inches in diameter of a single fixture having a relatively flat bottom at least 200 square inches of which slopes toward the outlet with a fall not exceeding ⅛ inch per foot, or the trap and fixture drain from a group of not more than three such fixtures, may be installed with a vertical section of the fixture drain not exceeding 24 pipe diameters in length at a distance not exceeding 10 pipe diameters from the trap weir, with a total length of sloping drain not exceeding 72 pipe diameters, with no back vent, provided that the fixture drain is the highest drain on the soil or waste stack or on a yoke-vented vertical section of a horizontal branch. If the total developed length of the sloping sections of the drain from the fixture to the stack-vent or relief vent exceeds 72 pipe diameters (9 feet for 1½-inch diameter or 12 feet for 2-inch diameter), a back vent to the first vertical section of the drain or a continuous-waste-and-vent relief vent at or within this prescribed maximum distance shall be installed. (See par. 1010, and fig. 23, pt. III.)

Sec. 1011. Vents for Resealing Traps.—If a resealing trap of approved design is installed for a fixture or a group of not more than three fixtures, the limits given for venting in section 1010 shall apply. (See par. 1011, pt. III.)

Sec. 1012. Fixtures at Base of Main Vent.—A group of not more than three fixtures, none of which discharge greasy wastes, may be installed on a main vent or vent stack below the lowest branch vent, provided the load does not exceed one-half the allowable load by table

807 on a horizontal branch of the same diameter as the main vent. (See par. 1012, pt. III.)

Sec. 1013. Size and Length of Main Vents.—Vent stacks or main vents shall have a diameter of at least one-half that of the soil or waste stack, and shall be of larger diameter in accordance with the limits of length and number of fixture units as given in table 1013. The length of the main vent for application with table 1013 shall be the total developed length as follows:

(*a*) From the lowest connection of the vent system with the soil stack, waste stack, or primary branch to the terminal of the vent, if it terminates separately to the open air;

(*b*) From the lowest connection of the vent system with the soil stack, waste stack, or primary branch to the stack-vent plus the developed length of the stack-vent to its terminal in the open air, if the stack-vent and vent stack are joined with a single extension to the open air.

Table 1013.—*Size and length of main vents*

Diameter of soil or waste stack (inches)	Number of fixture units on soil or waste stack	Maximum permissible developed length of vent								
		1¼-inch vent	1½-inch vent	2-inch vent	2½-inch vent	3-inch vent	4-inch vent	5-inch vent	6-inch vent	8-inch vent
		Feet	*Feet*	*Feet*	*Feet*	*Feet*	*Feet*	*Feet*	*Feet*	*Feet*
1¼	2	75	-----	-----	-----	-----	-----	-----	-----	-----
1½	8	70	150	-----	-----	-----	-----	-----	-----	-----
2	24	28	70	300	-----	-----	-----	-----	-----	-----
3	40	-----	20	80	260	650	-----	-----	-----	-----
3	80	-----	18	75	240	600	-----	-----	-----	-----
4	310	-----	-----	30	95	240	1,000	-----	-----	-----
4	620	-----	-----	22	70	180	750	-----	-----	-----
5	750	-----	-----	-----	28	70	320	1,000	-----	-----
5	1,500	-----	-----	-----	20	50	240	750	-----	-----
6	1,440	-----	-----	-----	-----	20	95	240	1,000	-----
6	2,880	-----	-----	-----	-----	18	70	180	750	-----
8	3,100	-----	-----	-----	-----	-----	30	80	350	1,100
8	6,200	-----	-----	-----	-----	-----	25	60	250	800

Sec. 1014. Size and Length of Stack-Vents.—Stack-vents shall be of the same diameter as the soil or waste stack, if the soil or waste stack carries one-half or more of its permissible load by table 805 or has horizontal branches in more than two branch intervals. If the soil or waste stack carries less than one-half its permissible load and has horizontal branches in not more than two branch intervals, the stack-vent may be of a diameter not less and a length not greater than required by table 1013.

Sec. 1015. Size of Back Vents and Relief Vents.—The nominal diameter of a back vent, when required, shall be not less than 1¼ inches nor less than one-half the diameter of the drain to which it is connected, and under conditions that require a relief vent for approved forms of group venting (see secs. 1007, 1008, and 1009), the sum of the cross sections of all vents installed on the horizontal branches in one branch interval shall be at least equal to that of either the main vent or the largest horizontal branch in the branch interval.

Sec. 1016. Size of Circuit and Loop Vents.—(*a*) The nominal diameter of a circuit or loop vent and the first relief vent as required by section 1009(*a*) shall be not less than one-half the diameter of the horizontal branch thus vented. Under conditions that require a relief vent (see sec. 1009) the sum of the cross-sections of the circuit or loop and relief vents shall be at least equal to that of either the main vent required or the horizontal branch. In determining the sum of cross sections for this requirement all relief vents connected to the horizontal branch may be included.

(*b*) Additional relief vents, installed in compliance with section 1009(*b*), shall be not less in diameter than one-half that of the largest fixture branch connected to the horizontal branch.

Sec. 1017. Relief Vents for Offsets.—The relief vent required for an offset, as prescribed by section 806(*b*), shall be installed either as a vertical continuation of the lower section of the soil or waste stack or as a side vent connected to the lower section of the soil or waste stack between the offset and the next fixture or horizontal branch below the offset. The size of the required relief vent shall be determined as follows:

(*a*) If the stack-vent from the upper section of the soil or waste stack is equal to that of the upper section, the relief vent shall not be smaller than the main vent of the stack system;

(*b*) If the stack-vent from the upper section of the soil or waste stack is smaller in diameter than that section, it may be the same diameter as the main vent required, in which case the diameter of the relief vent for the offset shall be equal to that of the lower section and shall be extended to the open air without reduction

in size or may be connected to the main vent or stack-vent, provided the one to which it is connected is of equal or greater diameter.

If horizontal branches connect to any soil or waste stack between two offsets each offset shall be vented as required in this section.

Sec. 1018. Frost Closure.—In cold climates adequate provision shall be made to guard against frost closure of vents.

Sec. 1019. Location of Vent Terminals.—(*a*) No vent terminal from the sanitary drainage system shall be within 12 feet of any door, window, or ventilating opening of the same or an adjacent building unless it is at least 3 feet higher than the top of such opening. Extensions of vent pipes through a roof shall terminate at least 1 foot above it and shall be properly flashed. Vent terminals extending through walls shall not terminate within 12 feet horizontally of any adjacent building line, shall be turned to provide a horizontal opening downward, shall be effectively screened, and shall be properly flashed, calked, or otherwise sealed.

(*b*) In the event that a structure is built higher than an existing structure, the owner of the structure shall not locate windows within 12 feet of any existing vent terminal on the lower structure, unless the owner of such higher structure shall defray the expenses of, or shall himself make, such alterations as are necessary to conform with the provisions of this section.

Sec. 1020. Vents Not Required.—(*a*) No vent shall be required for a leader trap, backwater trap, or subsoil catchbasin trap.

(*b*) No vent shall be required for the trap of a basement or cellar-floor drain or area drain, provided such drain branches into the building drain or a branch thereof at least 5 feet downstream from any soil or waste stack, the length and fall of the floor or area drain are within the limits of section 1005, the load on the building drain or any of its branches does not exceed the limits in table 807, and the building drain is not subject to backwater effects.

Sec. 1021. Vents Prohibited.—(*a*) No back vent shall be installed within two pipe diameters of the trap weir.

(*b*) Except as permitted in sections 1006, 1007, 1008, 1009, and 1012, no wet vent shall be installed.

CHAPTER XI. INDIRECT CONNECTIONS TO WASTE PIPES

Sec. 1101. Indirect Wastes.—Waste pipes from the following shall not connect directly with any building drain, soil, or waste pipe: a refrigerator, ice box, or other receptacle where food is stored; an appliance, device, or apparatus used in the preparation or processing of food or drink; an appliance, device, or apparatus using water as a cooling or heating medium; a sterilizer, water still, water-treatment device, or water-operated device.

Such waste pipes shall in all cases empty into, and above the flood level of, an open plumbing fixture or shall be connected indirectly to the inlet side of a fixture trap. Indirect waste connections shall not be located in inaccessible or unventilated cellars or other spaces. (See par. 1101, pt. III.)

Sec. 1102. Size of Refrigerator Wastes.—Refrigerator waste pipes shall be not less than 1¼ inches in diameter for one opening, 1½ inches for 2 or 3 openings, and 2 inches for 4 to 12 openings. Each opening shall have a trap and clean-out so installed as to permit proper flushing and cleaning of the waste pipe.

Sec. 1103. Overflow Pipes.—Overflow pipes from a water-supply tank or exhaust pipes from a water lift shall not be directly connected with any building drain or with any soil or waste pipe, but shall discharge outside the building, or into an open fixture as provided in section 1101.

CHAPTER XII. MAINTENANCE

Sec. 1201. Defective Plumbing.—Any part of the plumbing system found defective or in an insanitary condition shall be repaired, renovated, replaced, or removed within 30 days upon written notice from the authority having jurisdiction over plumbing.

Sec. 1202. Temporary Toilet Facilities.—Toilet facilities provided for the use of workmen during the construction of any building shall be maintained in a sanitary condition.

Sec. 1203. Condensate and Blow-Off Connections.—No direct connection of a steam exhaust, boiler blow-off, or drip pipe shall be made with the building-drainage system. Waste water when discharged into the building-drain-

age system shall be at a temperature not higher than 140° F. Where higher temperatures exist proper cooling methods shall be provided.

CHAPTER XIII. INSPECTION AND TESTS

Sec. 1301. Inspection.—All piping, traps, and fixtures of a plumbing system shall be inspected by the authority having jurisdiction over plumbing to insure compliance with the requirements of this manual and the installation and construction of the system in accordance with the approved plans and the permit.

Sec. 1302. Tests Required.—Every plumbing system shall be subjected to tests for tightness. The complete water-supply system of the building shall be subjected to a water or air-pressure test. The drainage system within or under the building shall be subjected to a water or air-pressure test before the pipes are concealed or the fixtures are set in place, and the sanitary-drainage and vent system shall be subjected to a final smoke or air-pressure test after the system has been completed and the fixture traps have been connected. The authority having jurisdiction over plumbing may require the removal of any plug or cap during the test to determine whether the pressure has reached all parts of the system. He may modify or change the order of any of the tests prescribed in sections 1305, 1306, and 1307, or may substitute a different test to meet special conditions; provided that the tests used are, in his opinion, as effective as those required in the sections enumerated.

Sec. 1303. Notification for Test.—(*a*) It shall be the duty of the plumber to notify the authority having jurisdiction over plumbing and the owner, or his authorized agent, orally, by telephone, or in writing, not less than one working day before the work is to be inspected or tested.

(*b*) It shall be the duty of the plumber to make sure that the work will stand the test prescribed before giving the above notification.

(*c*) If the authority having jurisdiction over plumbing finds that the work will not stand the test, the plumber shall be required to renotify the authority.

(*d*) If the authority having jurisdiction over plumbing fails to appear within 24 hours of the time set for any inspection or test, the inspection or test shall be made by the plumber and the plumber required to file an affidavit with the authority having jurisdiction over plumbing and with the owner. The affidavit shall state that the work was installed in accordance with this manual and the approved plans and permit, that it was free from defects, and that the required tests were made and the system is free from leaks; also whether the owner or his authorized agent was present when such inspection or tests were made, or was duly notified.

Sec. 1304. Labor and Equipment for Tests.—The equipment, material, power, and labor necessary for the inspection and test shall be furnished by the plumber, unless otherwise provided by the authority having jurisdiction over plumbing.

Sec. 1305. Tests of Drainage System.—(*a*) A water test may be applied to the system in its entirety or in sections. If applied to the entire system, all openings in the piping shall be tightly closed, except the highest opening, and the system filled with water to the point of overflow. If the system is tested in sections, each opening shall be tightly plugged (except the highest opening of the section under test) and the section shall be filled with water. In testing successive sections, at least the upper 10 feet of the next lower section shall be retested (except the uppermost 10 feet of the system) and shall have been subjected to at least a 10-foot head of water.

The water level shall remain constant without any further addition for sufficient time to inspect the entire section under test, but in no case less than 15 minutes.

(*b*) In place of the water test, an air test may be applied as follows: With all openings tightly closed, air shall be forced into the system until there is a uniform pressure sufficient to balance a column of mercury 10 inches in height (or 5 pounds per square inch) on the entire system or section under test. The air pressure shall be maintained on the system or section without any further addition of air for a sufficient time to determine tightness but in no case for less than 15 minutes. (See par. 1305 (*b*), p. III.)

Sec. 1306. Final Test.—After all fixtures

have been permanently connected and all trap seals filled with water, a smoke or air test under a pressure of approximately 1-inch water column shall be applied to the sanitary system.

In the case of a smoke test, a thick penetrating smoke produced by one or more smoke machines (not by chemical mixtures) shall be introduced into the entire system through a suitable opening. As the smoke appears at the stack openings, they shall be closed and a pressure equivalent to 1-inch water column shall be applied.

Sec. 1307. Tests of the Water-Supply System.—The water-supply system shall be tested in its entirety by filling the entire system with water under a pressure of at least 100 pounds per square inch, or by applying air pressure of at least 35 pounds per square inch (70 inches of mercury column) in case the water test is not feasible or not desirable. The test in either case shall be applied for sufficient time to determine tightness.

Sec. 1308. Final Condition.—All parts of the plumbing system and associated equipment shall be otherwise tested and adjusted to work properly and be left in good operating condition.

Sec. 1309. Separate Tests Permitted.—Tests may be made separately, as follows:

(*a*) The building sewer and all its branches from the property line to the building drain.

(*b*) The building drain and yard drains, including all piping to the height of 10 feet above the highest point on the house drain, except the exposed connections to fixtures.

(*c*) The soil, waste, vent, inside leader, and drainage pipes which would be covered up before the building is inclosed or ready for completion. The test required for (*b*) and (*c*) may be combined.

(*d*) The final test of the whole system.

After each of the above tests has been made and proved acceptable the authority having jurisdiction over plumbing shall issue a written approval.

Sec. 1310. Covering of Work.—No drainage or plumbing system or part thereof shall be covered until it has been inspected, tested, and approved as prescribed in this chapter. If any building-drainage or plumbing system, or part thereof, is covered before being regularly inspected, tested, and approved, as prescribed in this chapter, it shall be uncovered upon the direction of the authority having jurisdiction over plumbing.

Sec. 1311. Defective Work.—If inspection or test shows defects, such defective work or material shall be replaced and inspection and the tests repeated.

All repairs to piping shall be made with new material. No calking on screwed joints, cracks, or holes will be acceptable.

Sec. 1312. Tests of Leaders.—Leaders and their roof connections within the walls of buildings, or their branches on an outside system where such branches connect with the building drain or are less than 3 feet from the wall of the building, shall be tested by the water or air test. Branches on the outside system may be tested in connection with the house drain.

Sec. 1313. Outbuildings.—If a stable, barn, or other outbuilding or any part thereof is used for human habitation, the specified inspections and tests of the plumbing system shall be made. Otherwise, all drains shall be inspected, but need not be tested.

Sec. 1314. Garages.—For a garage or any part of a garage the specified tests and inspections of the plumbing system shall be made.

Sec. 1315. Certificate of Approval.—Upon the satisfactory completion and final test of the plumbing system a certificate of approval shall be issued by the authority having jurisdiction over plumbing to the plumber to be delivered to the owner.

Sec. 1316. Test of Defective Plumbing.—The smoke or air test shall be used in testing the sanitary condition of the plumbing system of a building where there is reason to believe that the system has become defective. In plumbing found defective by the authority having jurisdiction over plumbing the alterations required shall be considered as new plumbing.

Sec. 1317. Inspections and Tests Not Required.—No tests or inspections shall be required where a plumbing system or part thereof is set up for exhibition purposes and is not used for toilet purposes and not directly connected to a sewerage system; nor after the repairing, or the replacement by a new one to be used for the same purpose, of an old fixture, faucet, or valve; nor after forcing out stoppages and repairing leaks.

PLUMBING SYMBOLS			
Symbol	Plan	Initials	Item
	○	D.	Drainage Line
	○	V.S.	Vent Line
	◎		Tile Pipe
	○	C.W.	Cold Water Line
	○	H.W.	Hot Water Line
	○	H.W.R.	Hot Water Return
	⊗	G	Gas Pipe
	○	D.W.	Ice Water Supply
	○	D.R.	Ice Water Return
	○	F.L.	Fire Line
	⊕	I.W.	Indirect Waste
	⊕	I.S.	Industrial Sewer
	⊘	AW	Acid Waste
	Ⓐ	A	Air Line
	Ⓥ	V	Vacuum Line
	R	R	Refrigerator Waste
			Gate Valves
			Check Valves
CO CO		CO.	Cleanout
F.D		F.D.	Floor Drain
R.D		R.D.	Roof Drain
REF.		REF.	Refrigerator Drain
		S.D.	Shower Drain
GT		G.T.	Grease Trap
S.C.		S.C.	Sill Cock
G		G.	Gas Outlet
VAC		VAC.	Vacuum Outlet
M		M	Meter
I×			Hydrant
H.R.		H.R.	Hose Rack
H.R.		H.R.	Hose Rack-Built in
L		L.	Leader
HWT		H.W.T.	Hot Water Tank
WH		W.H.	Water Heater
WM		W.M.	Washing Machine
RB		R.B.	Range Boiler

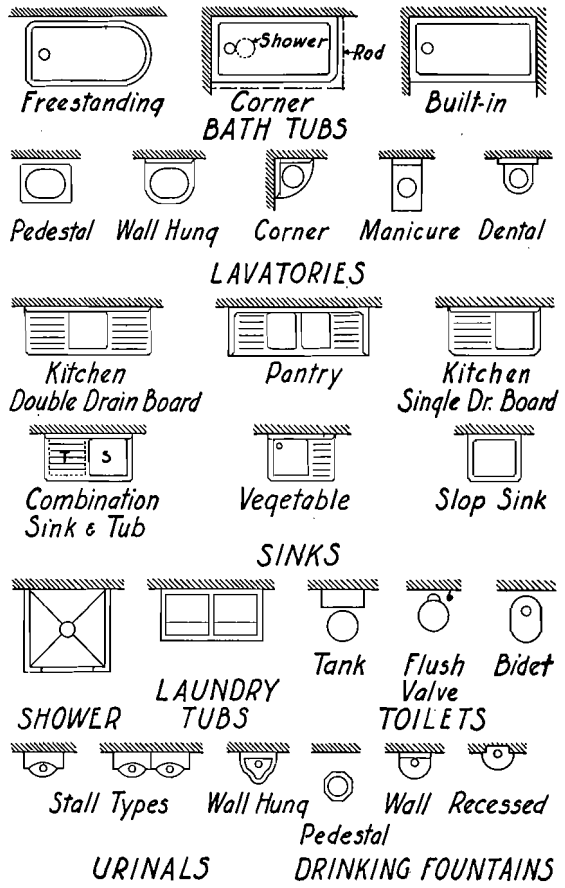

FIGURE 1.—*Standard plumbing symbols.*

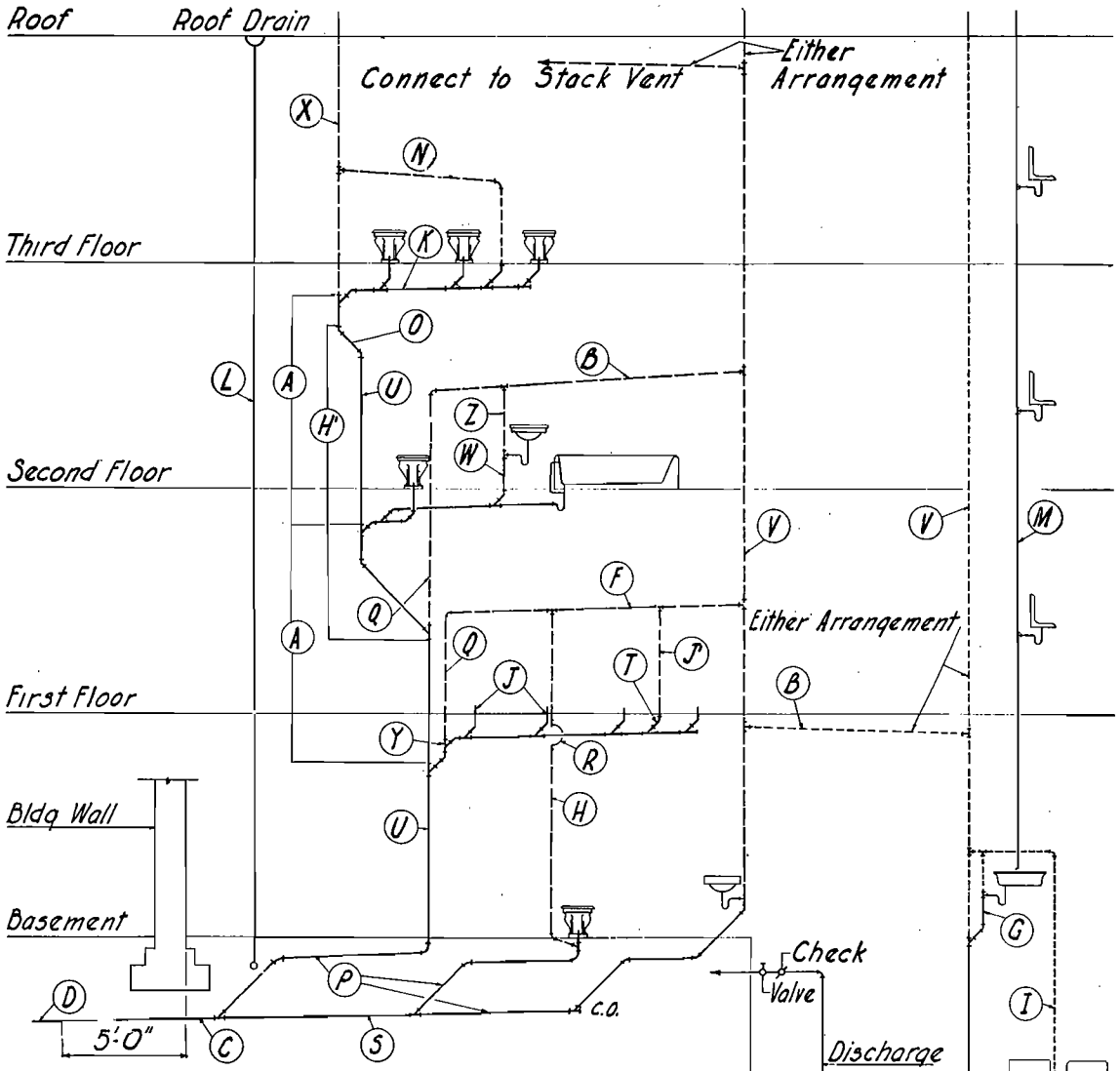

A = Branch Interval
B = Branch Vent
C = Building Drain
D = Building Sewer
E = Building Sub-drain
F = Circuit Vent
G = Continuous Waste & Vent
H = Dry Vent
H' = Double Offset
I = Dual Vent (Unit Vent)
J = Fixture Drain
J' = Group Vent
K = Horizontal Branch
L = Leader
M = Indirect Waste
N = Loop Vent
O = Offset
P = Primary Branch
Q = Relief Vent
R = Return Offset or Jumpover
S = Secondary Branch
T = Side Vent
U = Soil Stack
V = Vent Stack
W = Wet Vent
X = Stack Vent
Y = Yoke Vent
Z = Back Vent

c.o. = Cleanout

FIGURE 2.—*Illustration of definitions.*

PART III. EXPLANATIONS, ILLUSTRATIONS, AND INTERPRETATIONS

[NOTE.—Part III is divided into subdivisions called paragraphs, each of which is numbered to correspond with the section in part II to which it applies. Since not all sections of part II are discussed in part III, the paragraph numbering in part III is not necessarily consecutive. Tables also carry the same number as the section in part II to which they apply, with the addition of the suffix "-III" so that when reference is made to them it will be readily understood that they are to be found in part III.]

Par. 101. DEFINITIONS.

Accepted standards.—Since this manual is primarily for Federal use, preference is given to Federal specifications in stating requirements. These do not cover all plumbing fixtures and materials, however, and there may be special conditions requiring the use of other specifications. In part II, the Federal specification is given where it exists. Where there is no such specification and a suitable one is available from another source, this is given. Where there is no suitable specification that can be definitely identified, the matter is left to the authority having jurisdiction over plumbing. In a few cases available information not in the form of a specification is given in the form of tables.

Sewage-treatment plant.—The term "sewage" is a general inclusive term used to designate the combination of liquid-borne waste originating in residences, business buildings, institutions, and industrial establishments with or without such ground, surface, or storm water as may become mixed with it as it is admitted into or passes through the sewers. It may be further defined to indicate the character of the liquid waste carried, as sanitary sewage, industrial sewage (more commonly called industrial waste), and storm sewage.

Sanitary sewage is that which originates in the sanitary conveniences of dwellings, business buildings, factories, institutions, and the like. Industrial sewage or industrial waste originates in an industrial process and is usually designated by the name of that process, as for example, "brewery wastes." Storm sewage is that flowing in combined or storm sewers during or following a period of rainfall and resulting from such rainfall.

Sewers are often designated as to type of sewage carried. Sanitary sewers carry sanitary sewage, which may or may not be mixed with some ground water which percolates into the sewers. Storm sewers carry roof and surface run-off following rains. Industrial sewers carry industrial wastes. Where a single sewer is designed to carry both sanitary sewage and storm water, it is referred to as a combined sewer.

"Sewage treatment" is a term used to designate any artificial process to which sewage is subjected in order to remove or alter its objectionable constituents and to render it less dangerous from the public-health standpoint. The term "sewage purification" is also used in this same connection.

Occasionally in designing a plumbing system for a building or an institution, it is necessary to include plans for final disposal of the sewage. Many factors enter into any plan for treatment of sewage; and the proper operation of the treatment plant, no matter how small, depends upon the careful consideration of these factors in the design. When it is not possible to place the design in the hands of a competent sanitary engineer, the advice of the health agencies, either State or Federal, should be obtained.

The usual method of disposing of sewage where the amount is small is through cesspools or small septic-tank subsurface disposal systems. While definite recommendations relative to design of these two types of disposal should be obtained from the health agencies, certain information may be of value to the designing engineer in preparing preliminary plans.

A leaching cesspool is one in which the solids present in the sewage are retained and the liquid leaches or seeps into the surrounding soil. The success of this type of disposal is dependent upon the character of the soil and its suitability

for rapid dispersal of the liquid entering it. Cesspools tend to seal themselves, the time required being dependent upon the character of the surrounding soil. The solids entering the cesspool in the sewage accumulate and at intervals must be removed. In the design, therefore, the character of the soil must be considered and allowances made for the storage of solids.

Where water supplies are developed in the same area, cesspools should be located at least 100 feet away from wells or other sources of water supply and on ground which slopes away from such sources. Cesspools should not extend into the ground-water table.

Septic-tank installations generally consist of a watertight tank and a subsurface system for disposal of the effluent from the tank. The subsurface disposal system may consist of open-joint tile, filter trench, or subsurface sand filter.

A septic tank is a settling tank in which it is intended to retain the sewage solids (sludge) in immediate contact with the sewage flowing through the tank for a sufficient period to secure a satisfactory decomposition of organic solids by anaerobic bacterial action. Septic tanks should not be confused with other types of tanks used in connection with sewage treatment.

The solids (sludge) retained in a septic tank must be removed whenever there is a sufficient accumulation to reduce materially the liquid capacity of the tank. The effluent from the septic tank is only partially treated sewage and is in a septic condition.

The effluent of a septic tank should not be discharged to a small stream nor can it be discharged to the surface of the ground without nuisance.

A septic tank should be located as close as practicable to the subsurface disposal field. It should be located, if possible, at least 100 feet, but never less than 50 feet, from wells, springs, or underground water-storage basins; at a lower elevation; and where there will be the least danger of sewage overflowing or leaking in such a way as to contaminate a water supply.

Grease interceptors should normally be omitted on small septic-tank installations.

Septic tanks should be designed with a minimum liquid capacity equal to 24 hours' flow of sewage. The minimum-size tank should be not less than 500-gallon liquid capacity. When the effluent of a septic tank having a capacity in excess of 1,000 gallons is discharged to a subsurface tile disposal field, a dosing tank and an automatic sewage siphon is advisable. Tanks of less than 1,000-gallon liquid capacity do not require automatic siphons.

Subsurface disposal of the effluent from septic tanks is possible where the character of the soil will permit its absorption. The percolation test is the most logical and practical method of determining the suitability of the soil for this method of disposal.

Par. 201. Installation of Piping.—When a building drain or sewer is installed with a fall of less than 1/16 inch per foot as permitted by section 201, part II, for 10-inch and larger diameters, the minimum permissible velocity should be computed by the formula $h/12l = 0.0008385\ v^2/d$ (for rough pipe), where h is the fall in inches per foot, l the length of pipe in feet, v the velocity in feet per second, and d the diameter in feet. If it is desired to install a building drain or building sewer at a slope that will maintain a velocity above some selected minimum within the specified minimums for the different diameters, the following table 201–III applying to rough pipe may be consulted. In general, the required fall in inches per foot is given approximately by $\sqrt{s/s_1} = v/v_1$ or $s = s_1(v/v_1)^2$, in which s is the fall in inches per foot necessary to give a selected velocity v, and s_1 and v_1 are the fall and resultant velocity for pipe of the same diameter.

Table 201–III.—*Approximate velocities for given slopes and diameters*

Diameter of pipe	Velocities				
	1/32-inch fall per foot	1/16-inch fall per foot	1/8-inch fall per foot	1/4-inch fall per foot	1/2-inch fall per foot
Inches	*fps*	*fps*	*fps*	*fps*	*fps*
1¼	0.57	0.80	1.14	1.61	2.28
1½	.62	.88	1.24	1.76	2.45
2	.72	1.02	1.44	*2.03*	2.88
2½	.81	1.14	1.61	2.28	3.23
3	.88	1.24	1.76	2.49	3.53
4	1.02	1.44	*2.03*	2.88	4.07
5	1.14	1.61	2.28	3.23	4.56
6	1.24	1.76	2.49	3.53	5.00
8	1.44	*2.03*	2.88	4.07	5.75
10	1.61	2.28	3.23	4.56	6.44
12	1.76	2.49	3.53	5.00	7.06

Par. 301. QUALITY OF MATERIALS.—Frequent reference is made in chapter III, part II, to Federal specifications. The title of the specification as given in the Federal Standard Stock Catalog is presented but the specification symbol has been omitted. This is for the reason that such symbols change from time to time. It is to be understood that the latest revision of the specification, together with any subsequent amendments, is meant. For the convenience of the user of this manual, a list of specifications cited in chapter III, part II, together with the symbols in effect at the time of publication of this manual, is given in paragraphs 303 to 325 for more positive identification. It is recommended that the latest edition of the Federal Standard Stock Catalog be consulted from time to time to guard against the use of obsolete symbols. When there is any occasion for doubt, inquiry should be directed to the Federal Specifications Executive Committee, Washington, D. C.

Reference is also made in section 301, part II, to similar and equivalent specifications. These are for use primarily when no suitable Federal specification is available and may be made applicable, through the power of the authority having jurisdiction over plumbing, to fix acceptable standards. There are several sources of such standards. The chief ones are as follows:

American Society for Testing Materials, 260 South Broad Street, Philadelphia, Pa.

American Standards Association, 29 West Thirty-ninth Street, New York, N. Y.

Industrial associations.

Individual manufacturers.

In the case of these standards also, the symbol designations (particularly the part referring to year of adoption) change frequently and should be checked to see that the latest issue is being used.

In addition to the standards already cited, there is other useful material available for consultation by authorities having jurisdiction over plumbing. Included in this is a series of Commercial Standards and a series of Simplified Practice Recommendations, published by the National Bureau of Standards. Examples of each series appear below:

COMMERCIAL STANDARDS

Pipe nipples; brass, copper, steel, and wrought-iron. (1940)	CS5–40
Standard weight malleable iron or steel screwed unions. (1929)	CS7–29

SIMPLIFIED PRACTICE RECOMMENDATIONS

Eaves trough, conductor pipe and fittings, and ridge rolls. (1939)	R29–39
Wrought-iron and wrought-steel pipe valves and fittings. (1932)	R57–32
Range boilers and expansion tanks. (1929)	R8–29
Structural slate for plumbing and sanitary purposes. (1928)	R13–28
Brass lavatory and sink traps. (1925) mimeographed	R21
Hot water storage tanks. (1925) mimeographed	R25
Metal partitions for toilets and showers. (1929)	R101–29

Publications not indicated as mimeographed may be obtained by purchase from the Government Printing Office, Washington, D. C. Other publications and information may be obtained from the Division of Trade Standards and the Division of Simplified Practice, respectively, both at the National Bureau of Standards, Washington, D. C.

Par. 303. VITRIFIED-CLAY PIPE.—Federal Specification for Pipe; Clay, Sewer. SS–P–361, with Amendment 1, June 1935.

Standard Specifications for Clay Sewer Pipe. A. S. T. M. Designation: C13–35.

Par. 304. CONCRETE PIPE.—Federal Specification for Pipe; Concrete, Non-Pressure, Non-Reinforced and Reinforced. SS–P–371, February 19, 1937.

Standard Specification for Concrete Sewer Pipe. A. S. T. M. Designation: C14–35.

Par. 305. CAST-IRON SOIL PIPE.—Federal Specification for Pipe and Pipe Fittings; Soil, Cast-Iron. WW–P–401, with Amendment 1, January 1937.

American Standard for Cast-Iron Soil Pipe and Fittings. A. S. A. No. A40.1—1935.

Tentative Specifications for Cast-Iron Soil Pipe and Fittings. A. S. T. M. Designation: A74–39T.

Par. 306. CAST-IRON WATER PIPE.—Federal Specification for Pipe; Water, Cast-Iron (Bell

and Spigot and Bolted Joint). WW–P–421, with Amendment 3, April 1940.

American Standard for Cast-Iron Pipe, Pit-Cast for Water or Other Liquids. A. S. A. No. A21.2—1939.

Tentative Specifications for Cast-Iron Pit-Cast Pipe for Water or Other Liquid. A. S. T. M. Designation: A44–39T.

Standard Specifications for Cast-Iron Water Pipe and Special Castings of the American Water Works Association, adopted May 12, 1908.

Par. 307. Cast-Iron Screwed Pipe.—Federal Specification for Pipe, Cast-Iron; Drainage, Vent and Waste (Threaded). WW–P–356, August 19, 1936.

Par. 308. Wrought-Iron Pipe.—Federal Specification for Pipe, Wrought-Iron, Welded, Black and Galvanized. WW–P–441a, December 28, 1939.

American Standard for Lap-Welded and Seamless Pipe. A. S. A. No. B36.3—1939.

American Standard for Welded Wrought-Iron Pipe. A. S. A. No. B36.2—1939.

Standard Specifications for Welded Wrought-Iron Pipe. A. S. T. M. Designation: A72–39.

Par. 309. Steel Pipe.—Federal Specification for Pipe, Steel, Seamless and Welded, Black and Zinc-Coated. WW–P–403a, December 28, 1939.

American Standard for Welded and Seamless Steel Pipe. A. S. A. No. B36.1—1936.

Standard Specifications for Black and Hot-Dipped Zinc-Coated (Galvanized), Welded and Seamless Steel Pipe for Ordinary Uses. A. S. T. M. Designation: A120–36.

Par. 310. Brass and Copper Pipe.—Federal Specification for Pipe, Brass, Seamless, Iron Pipe Size, Standard and Extra Strong. WW–P–351, with Errata 1, October 1930.

Tentative Specifications for Brass Pipe, Standard Size. A. S. T. M. Designation: B43–39T.

Federal Specification for Pipe; Copper, Seamless, Iron Pipe Size, Standard. WW–P–377, May 31, 1932.

Tentative Specifications for Copper Pipe, Standard Size. A. S. T. M. Designation: B42–39T.

Par. 311. Brass Tubing.—Federal Specification for Plumbing Fixtures; (for) Land Use. WW–P–541a, March 30, 1940.

Par. 312. Copper Tubing.—Federal Specification for Tubing; Copper, Seamless (for Use With Soldered or Flared Fittings). WW–T–799, with Errata 2, April 1934.

Federal Specification for Tubing; Copper, Seamless (for General Use With I. P. S. Flanged Fittings). WW–T–797, with Errata 1, August 1933.

American Standard for Copper Water Tubing. A. S. A. No. H23.1—1939.

Standard Specifications for Copper Water Tubing. A. S. T. M. Designation: B88–39.

Par. 313. Lead Pipe.

Table 313–III.—*Diameter and weight of lead pipe*

[The following thicknesses and minimum weights are taken from the standard of the Lead Industries Association]

LEAD SERVICE AND SUPPLY PIPE

A or S (for pressures up to 50 lb/in.²)		
Inside diameter	Weight per foot	Outside diameter
Inches	*Pounds*	*Inches*
½	1½	0.798
⅝	2½	1.019
¾	3	1.156
1	4	1.428
1¼	4¾	1.670
1½	6½	1.984
2	8¾	2.503
AA or XS (for pressures between 50 and 75 lb/in.²)		
Inches	*Pounds*	*Inches*
½	2	0.876
⅝	3	1.082
¾	3½	1.212
1	4¾	1.492
1¼	6	1.765
1½	8	2.076
2	13¾	2.751
AAA or XXS (for pressures between 75 and 100 lb/in.²)		
Inches	*Pounds*	*Inches*
½	3	1.012
⅝	3½	1.137
¾	4¾	1.336
1	6	1.596
1¼	7¾	1.889
1½	11¼	2.272
2	19½	3.008

LEAD WASTE PIPE

Minimum recommended weight, "D" or "XL"		
Inside diameter	Weight per foot	Outside diameter
Inches	*Pounds*	*Inches*
1¼	2½	1.486
1½	3½	1.776
2	4¾	2.284
2½	5	2.75
3	6	3.25
4	7⅞	4.25
5	9⅞	5.25
6	11 13/16	6.25

A more extended table is available from the Lead Industries Association, 420 Lexington Avenue, New York, N. Y.

Par. 314. SHEET LEAD.—Federal Specification for Lead; Sheet. QQ–L–201, January 10, 1933.

Par. 315. CALKING LEAD.—Federal Specification for Lead, Calking. QQ–L–156, June 5, 1934.

Par. 316. SHEET COPPER AND BRASS.—Federal Specification for Copper; Bars, Plates, Rods, Shapes; Sheets, and Strips. QQ–C–501, with Amendment 1, November 1936.

Federal Specification for Brass, Commercial; Bars, Plates, Rods, Shapes, Sheets, and Strips. QQ–B–611a, April 27, 1938.

Tentative Specifications for Brass Sheet and Strips. A. S. T. M. Designation: B36–39T.

Par. 317. ZINC-COATED (GALVANIZED) SHEET IRON AND STEEL.—Federal Specification for Iron and Steel; Sheet, Black and Zinc-Coated (Galvanized). QQ–I–696, March 6, 1934.

Par. 318. SCREWED FITTINGS.—Federal Specification for Pipe Fittings; Cast-Iron (Threaded). WW–P–501a, June 7, 1939.

Federal Specification for Pipe Fittings; Malleable Iron (Threaded). WW–P–521a, June 20, 1939.

Federal Specification for Pipe Fittings; Brass or Bronze (Threaded), 125-lb. WW–P–448, May 26, 1931.

Federal Specification for Pipe Fittings; Cast-Iron, Drainage. WW–P–491, October 20, 1938.

Federal Specification for Pipe Threads, Standard. GGG–P–351, January 9, 1934.

Par. 319. SOLDERED FITTINGS.—American Standard for Soldered Joint Fittings. (Inquire of American Standards Association. Also see par. 409.)

Par. 320. CALKING FERRULES.—The following represents customary recommended practice for brass ferrules:

TABLE 320–III.—*Size, diameter, and weight of brass calking ferrules*

Pipe size	Actual inside diameter	Length	Weight	
Inches	*Inches*	*Inches*	*lb*	*oz*
2	2¼	4½	1	
3	3¼	4½	1	12
4	4¼	4½	2	8

For iron-body ferrules, reference should be made to Federal Specification for Pipe and Pipe Fittings; Soil, Cast-Iron. WW–P–401, with Amendment 1, January 1937.

Par. 321(*a*). SOLDERING NIPPLES.—The following represents customary recommended practice for soldering nipples:

TABLE 321(*a*)–III.—*Diameter and weight of soldering nipples*

Diameter	Weight	
Inches	*lb*	*oz*
1¼		6
1½		8
2		14
2½	1	6
3	2	0
4	3	8

Par. 322. FLOOR FLANGES.—Federal Specification for Plumbing Fixtures; (for) Land Use. WW–P–541a, March 30, 1940.

Par. 323. PACKING.—Federal Specification for Packing; Jute, Twisted. HH–P–117.

Par. 324. SETTING COMPOUND.—Federal Specification for Compound; Plumbing-Fixture-Setting. HH–C–536, June 5, 1936.

Par. 325. GASKETS.—Federal Specification for Gaskets; Plumbing-Fixture-Setting. HH–G–116, June 5, 1936.

Par. 402. VITRIFIED-CLAY AND CONCRETE PIPE.

Jointing Compounds for Vitrified-Clay Pipe.—There are no generally accepted specifications for jointing compounds for clay pipe. There are available a number of proprietary compounds prepared for this purpose. Hot-poured jointing compounds should liquefy and flow freely at the pouring temperature, should adhere to the pipe, and should be sufficiently elastic when cold to permit slight movement without injury to joints. The compound should be of a composition that will not deteriorate in water or sewage. Directions in regard to packing of joints and to heating and pouring temperatures are usually supplied with these prepared compounds and should be followed faithfully in making the joints. Joints in horizontal or sloping pipe are made with joint runner in the same manner as lead joints in cast-iron except that just enough packing to hold the pipe in position and prevent the compound from entering the interior of the pipe should be used

270988°—40——5

and the joint should not be calked after pouring. One or more joints may be poured in a vertical position without using a joint runner, allowed to set (harden), the joined pipes carefully lowered into position in the trench, and the remaining joints completed using a joint runner as described. The joint space and packing should be thoroughly dry and the joint space should be completely filled with one pouring.

Cement Joints in Vitrified-Clay Pipe.—The mortar should be freshly mixed, and of one part portland cement and two parts sand by weight. A layer of mortar should be placed in the bottom of the bell and the packing calked into it. The remainder of the joint should then be completely filled with the mortar and the outer face of the joint beveled. Earth should be packed around the joint until the mortar has set, to prevent sagging of the mortar, and the interior of the pipe cleared of any mortar that has been forced through the joint.

Par. 409. Joints in Copper Tubing.—Inasmuch as no standard exists for joints in copper tubing, reference is made to the proposed standard of the American Standards Association, Soldered-Joint Fittings, which is now in preparation. Requirements suggested by one manufacturer for material for fittings call for use of cast red brass or wrought metal containing at least 85-percent copper. Soldered fittings should be of such size that joints will be completely filled with solder by capillary action. For further information, it is recommended that National Bureau of Standards Building Materials and Structures Report BMS58 "Strength of Soft-Soldered Joints in Copper Tubing" be consulted. This report contains most of the data upon which the proposed American Standard is based. It is obtainable from the Government Printing Office, Washington, D. C., for 10 cents a copy.

Par. 413. Increasers and Reducers.—The prohibition of an enlargement chamber or recess with ledge, shoulder, or reduction in size of pipe in section 203, part II, and section 413, part II, is not to be construed as prohibiting enlargements such as formed by standard wye or other standard branch fittings, as prohibiting the recess formed in the vertical run of fittings in soil or waste stacks in order to accommodate several branch connections unless a definite ledge is formed thereby, or as prohibiting the enlargement of a 3-inch closet bend to 4 inches at its inlet in order that a standard 4-inch floor flange may be used in making floor connections for water closets. It is to be construed as prohibiting any enlargement, recess, or ledge through faulty design of fittings or poor workmanship that would form a dam or other obstruction in the direction of flow.

Par. 501. Types and Sizes of Traps.—The provisions of section 501, part II, are intended in general to require the use of properly vented P-traps with plumbing fixtures whenever conditions make the installation of that form of trap feasible. The provision regarding "self-cleaning" is relative, since there is no form of trap that does not become fouled by deposit or sediment under certain conditions of service. A trap having a tubular water passage of uniform cross-section, as exemplified by tubular P-traps, is generally regarded as being the nearest possible approach to self-cleaning.

To a limited extent, standards for fixture traps are covered by Federal Specification for Plumbing Fixtures; (for) Land Use, WW–P–541a. A standard covering traps for plumbing fixtures is in course of preparation by Sectional Committee A40 of the American Standards Association. A Simplified Practice Recommendation (No. 21) is available covering brass lavatory and sink traps. Recommendations for lead traps and lead bends may be obtained from the Lead Industries Association. Such material should be useful to the authority having jurisdiction over plumbing in determining proper standards.

Par. 502. Prohibited Traps.—The provision relative to "partitions" in traps, section 502, part II, applies only to traps constructed separately from and attached to fixtures in the process of installation. The purpose of the provision is to prevent the use of traps with inner partitions not accessible for inspection through which, if defective, the water seal of the trap might be lost without giving any indication that it had been lost. It is assumed that each trap acceptable under this provision will have been carefully inspected or tested during the process of manufacture and that the administrative authority will have inspected a

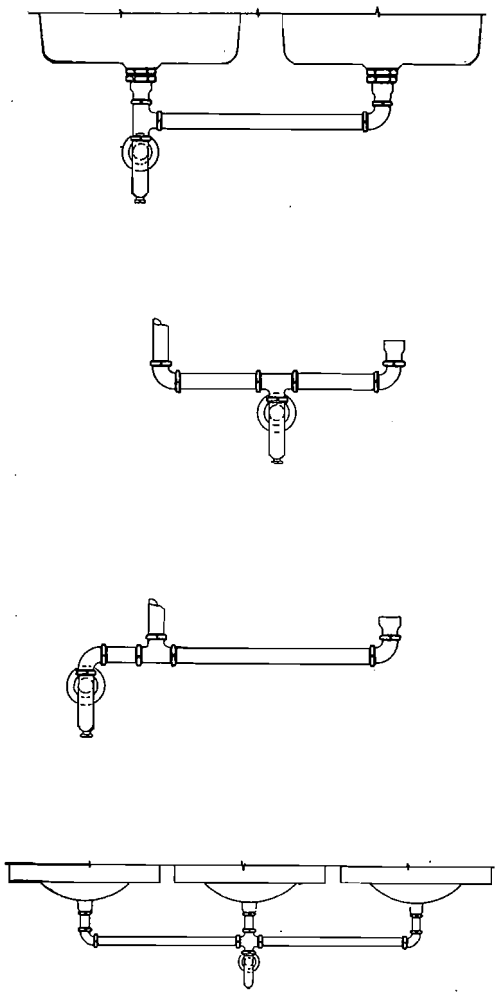

FIGURE 3.—*Continuous waste.*

sufficient number of traps before approval to satisfy himself that the quality and workmanship of traps installed in accordance with the requirement are uniformly good and that the hidden walls are uniformly without defects, are of sufficient thickness, and are accessible for inspection. The provision of section 502, regarding double-trapping, is not to be construed as preventing the installation of a grease interceptor, sand interceptor, or oil interceptor in addition to a fixture trap or traps, provided a vent intervenes between such interceptor and fixture traps.

Par. 601. QUALITY OF WATER.—Where the water supply of a building or institution is obtained from a public supply, the designing engineer of the plumbing system or the engineer or plumber making the installation has no control over the quality of the water. When an independent supply is to be installed, it is then the responsibility of both the designing and installing agencies to make sure that the water is satisfactory from the standpoint of quality (both bacterial and chemical) and of quantity.

Independent supplies are generally from ground-water sources, either wells or springs. Development of independent supplies from surface sources should be undertaken only under the direction of a sanitary engineer versed in water treatment.

In the development of a ground-water supply there are many factors to consider if a safe and satisfactory supply is to be obtained. It is suggested that the advice of state or Federal health services be obtained before plans for developing a supply are formulated.

The publication entitled "Ground Water Supplies," Supplement 124 to the Public Health Reports, covers the subject thoroughly. This publication can be obtained from the Superintendent of Documents, Washington, D. C., for 5 cents per copy.

The bacterial quality of any supply should conform to the "Drinking Water Standards" adopted by the Department of the Treasury, June 20, 1925, on recommendation of the U. S. Public Health Service, as they exist at present or may be modified in the future. Information relative to standards may be obtained from the U. S. Public Health Service, Washington, D. C.

Bacteriological examination of water from newly developed wells and springs quite generally indicates contamination, even where the

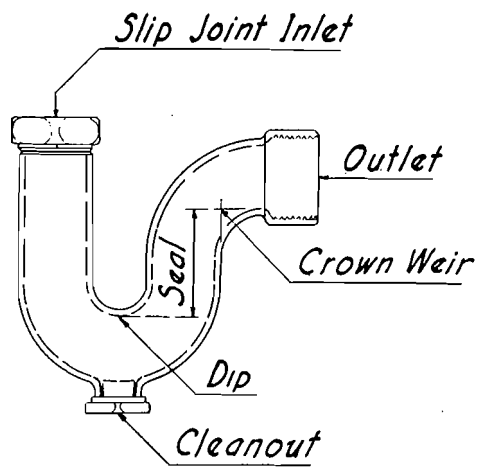

FIGURE 4.—*Depth of trap seal.*

installation is properly made, if care is not taken to sterilize the well and pumping equipment thoroughly after the installation has been completed. It is also desirable to sterilize the entire system after installation and before use.

Sterilization may be accomplished by introducing into the well or spring one of the chlorine compounds in amounts sufficient to give a chlorine dosage of 50 parts per million in the water. The chlorinated water should be circulated throughout the entire system and allowed to remain in the system 8 to 10 hours, after which the system should be flushed with water from the well or spring.

No samples of water for bacteriological examination should be taken until after sterilization of the supply and equipment and the removal of all traces of chlorine from the water. Directions regarding sterilization may be obtained from any of the health agencies.

Par. 602(*d*). Protection From Backflow.

Air Gaps.—An approved air gap should be provided in all overrim supplies. The following extract, from Federal Specification WW-P-541a, gives accepted standards of air gaps for overrim water supplies:

Fixtures with faucets or other supply fittings properly assembled shall provide between the level of all supply openings and the water level at point of unrestricted external overflow a mean vertical distance or air gap as specified in table X.

Table X.—*Air gaps*

Fixture and fitting	Minimum air gap	
	For ordinary conditions. (See notes 1 and 2)	For spout near wall. (See notes 1 and 2)
(1)	(2)	(3)
	Inches	*Inches*
Lavatory supplies with effective opening not greater than ½ inch	1.00	1.50
Sink, laundry tray, and bath (gooseneck) faucets with effective opening not greater than ¾ inch	1.50	2.25
Overrim bath fillers with effective opening not greater than 1 inch	2.00	3.00
Any fitting with effective opening greater than 1 inch	(a)	(b)
Drinking-fountain nozzles	0.75	

[a] 2x effective opening.
[b] 3x effective opening.

Note 1.—*Spout near wall.*—If any vertical wall extending to or above the horizontal plane of the spout opening is closer to the nearest inside wall of the spout opening than four times the diameter of the effective opening, the air gap shall be as specified above for spout near wall, column 3.

Note 2.—*Spout set at an angle.*—Should the plane of the end of the spout be at an angle to the surface of the water, the mean gap is to be taken as the basis for measurement, except for drinking-fountain nozzles, in which case the gap to the lowest point of the nozzle opening shall be taken.

Backflow Preventers.—When any supply pipe is installed with a fixture or receptacle in such a manner that an approved air gap is not provided, an approved backflow preventer should be installed in the supply fitting or connection on the outlet side of the control valve.

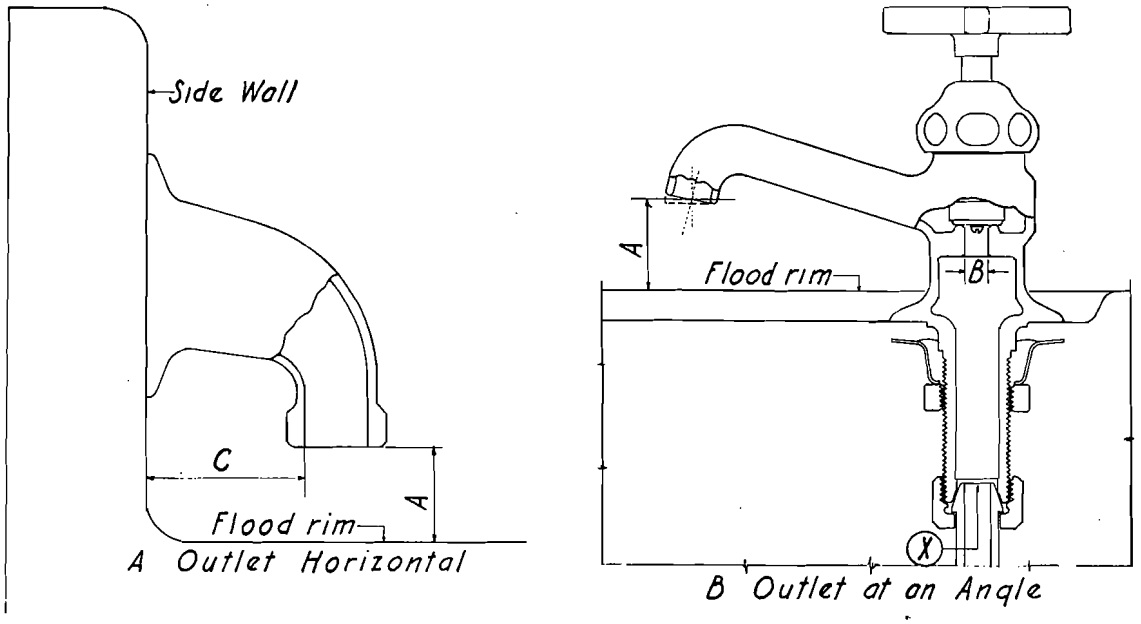

Figure 5.—*Illustration of air gap.*

Approval of a backflow preventer should be given on the basis of tests made by a recognized testing laboratory to determine its effectiveness under the conditions under which it is to be installed and used. Requirements for backflow preventers for ballcocks for flush tanks are given in Federal Specification WW–P–541a, paragraphs E–37c, F–7a, and F–7b, and requirements for flush valves for water closets and urinals in paragraphs E–38f, F–8a, and F–8b.

Par. 604. Size of Building Main.—The mandatory requirement of section 604, part II, that "the building main, including the water-service pipe, shall be of sufficient size to permit a continuous ample flow of water to the building under the average daily minimum service pressure in the street main," states a desirable attainment rather than one that can be provided for with certainty, since the rate of flow in a pipe of given size depends on many factors, some of which cannot be determined accurately in advance. The term "ample flow" in this requirement means a flow equal to or greater than the estimated demand. In designing the water-supply system of a large building and to a lesser extent that of a small building, the engineer will of necessity exercise his judgment in the selection of the material to use, the sizes of pipe to install, and the most efficient pipe lay-out, based on available information pertaining to the particular locality and building. It is assumed that the authority having jurisdiction over plumbing will exercise correspondingly intelligent judgment in inspecting plans and specifications for approval, if the plans for the water-supply system are subject to his approval.

For the use of the engineer in laying out the water-supply system of a building, there are given in the following pages a table (table 604–III(*a*)) of load-weight values in fixture

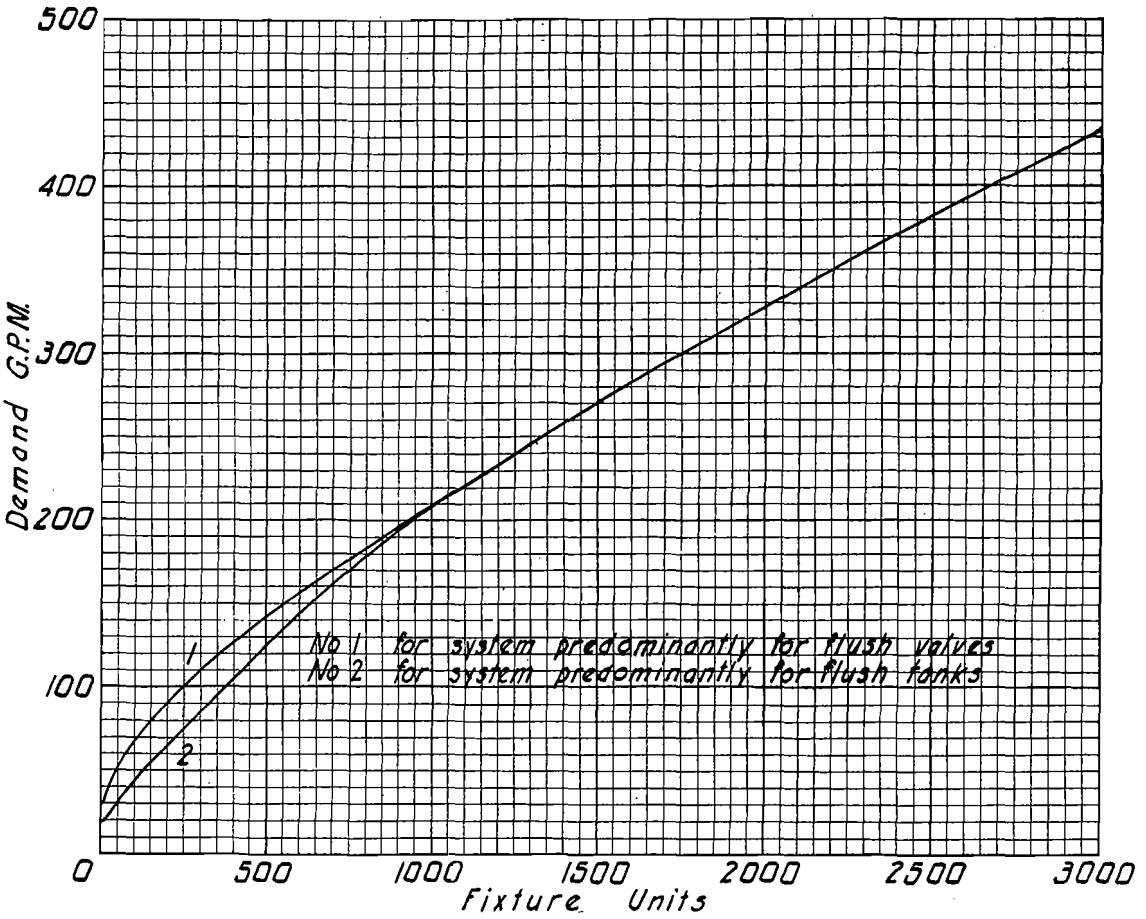

Figure 6.—*Curve for estimating supply demands.*

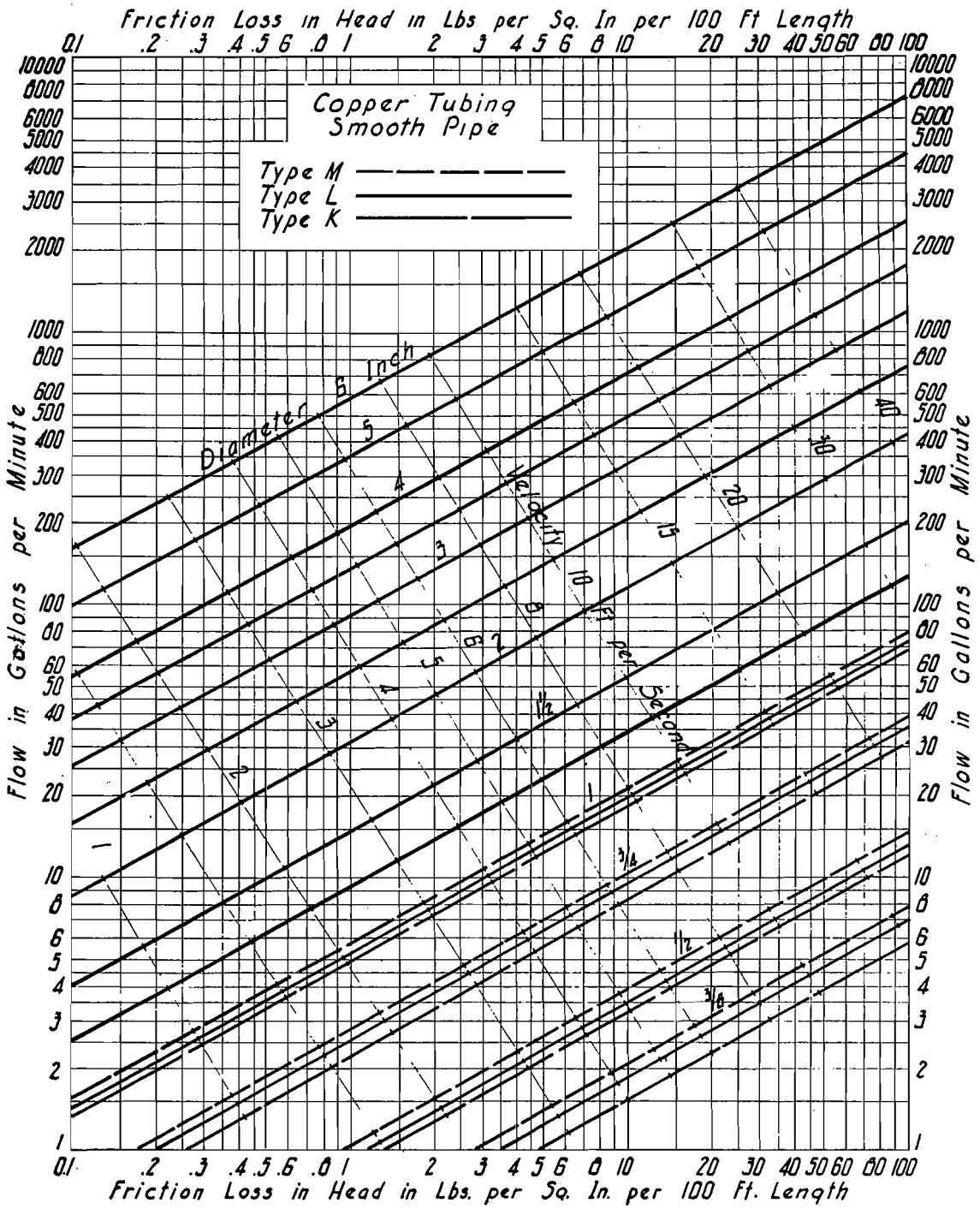

FIGURE 7.—*Flow chart for smooth pipe.*

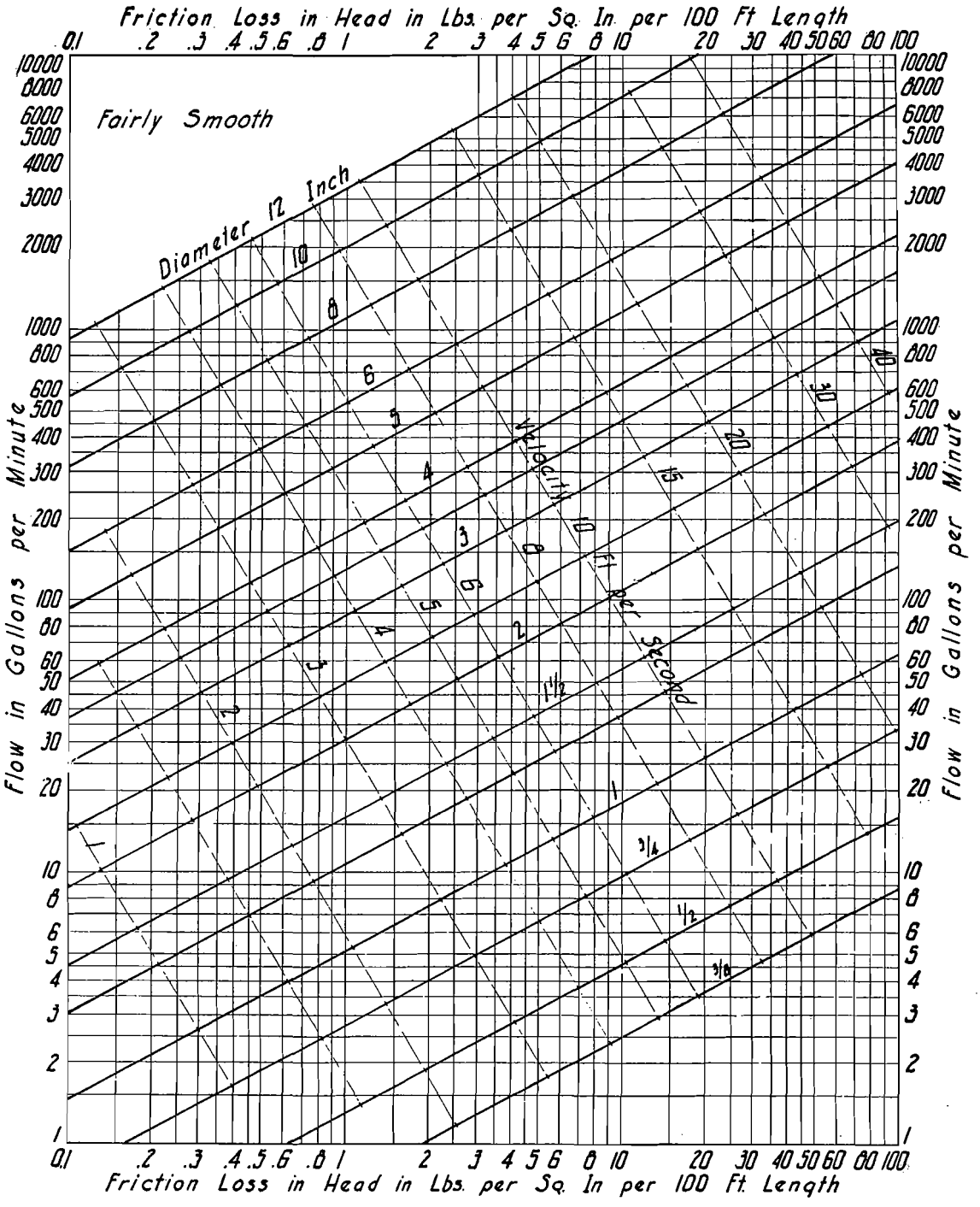

FIGURE 8.—*Flow chart for fairly smooth pipe.*

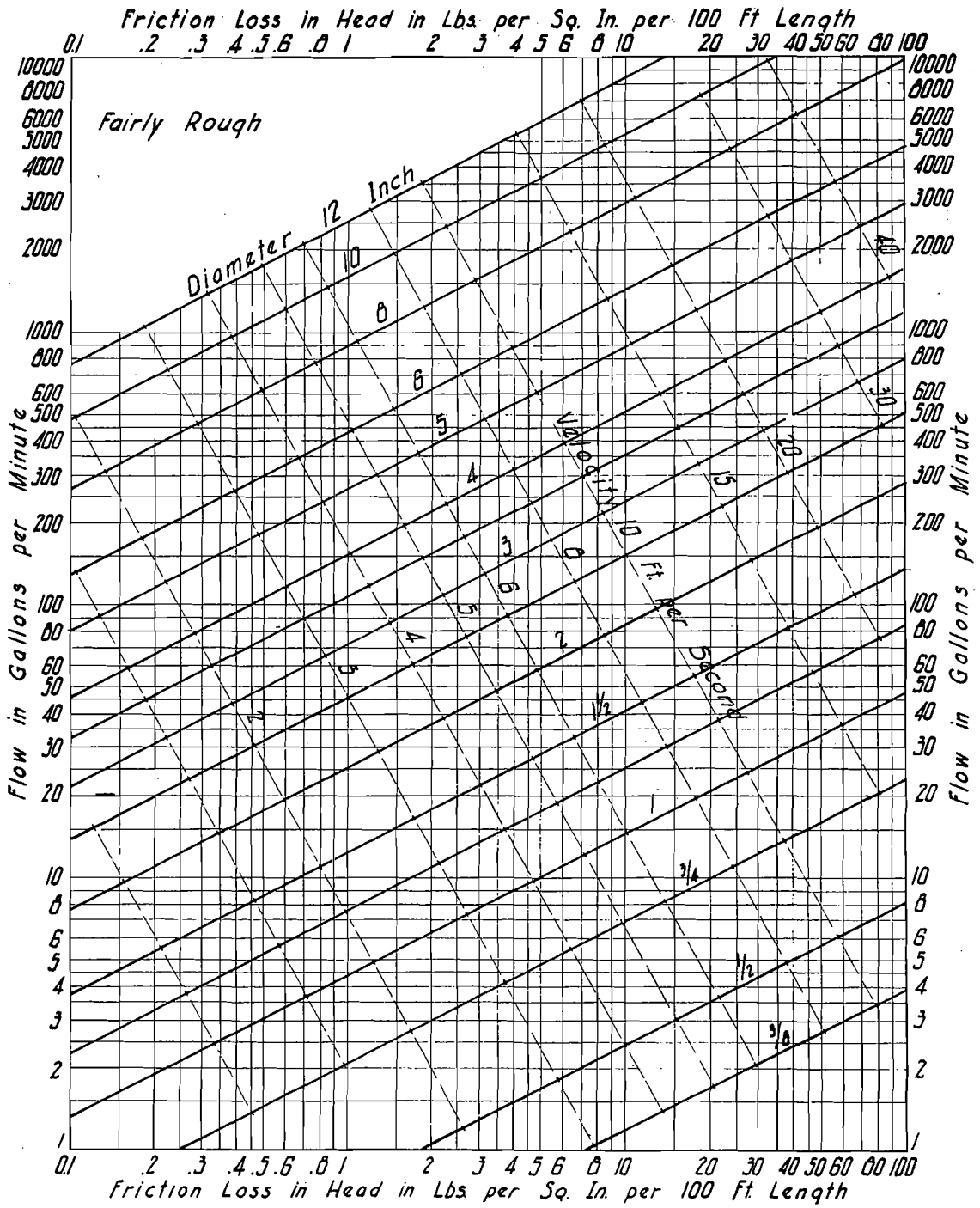

FIGURE 9.—*Flow chart for fairly rough pipe.*

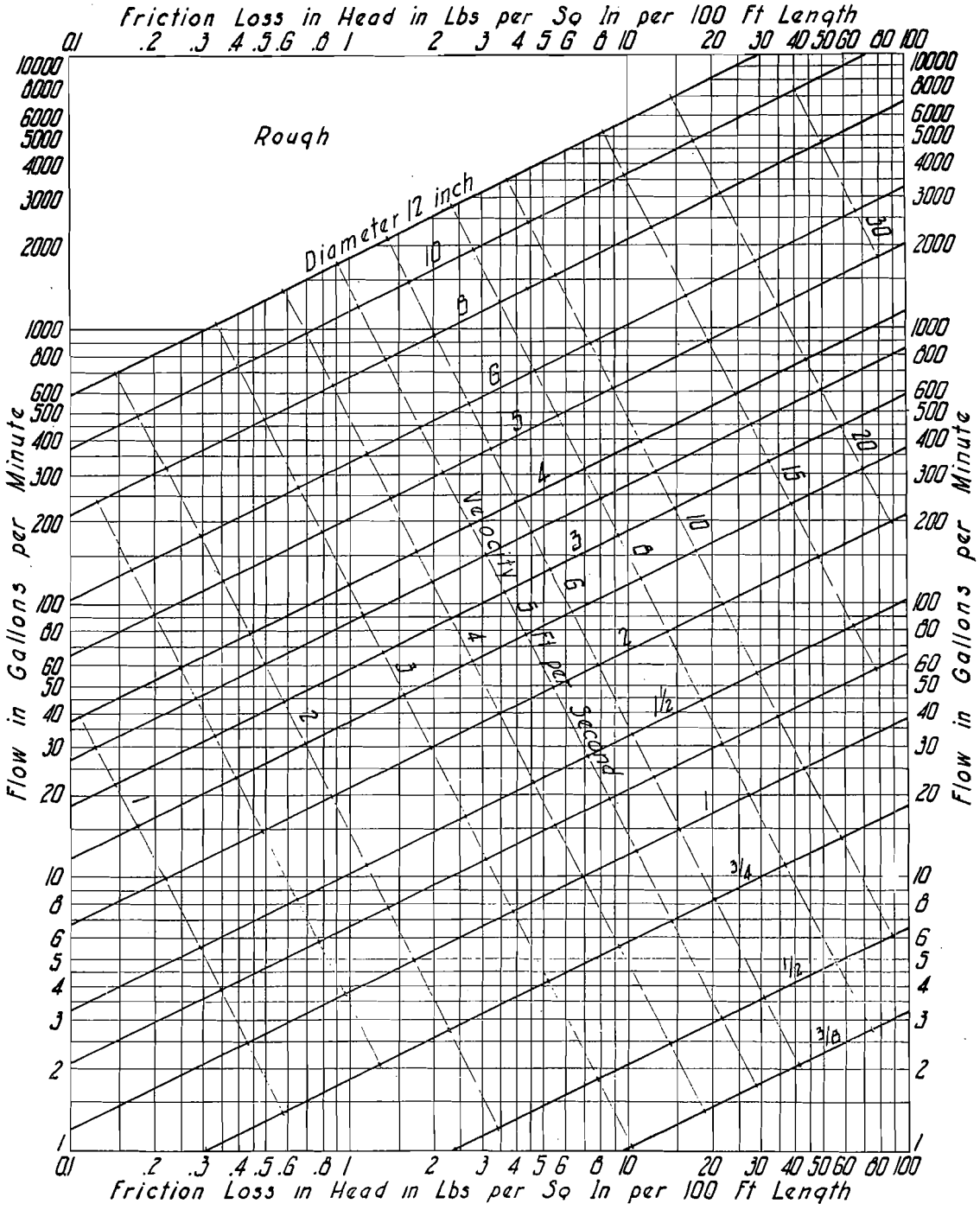

FIGURE 10.—*Flow chart for rough pipe.*

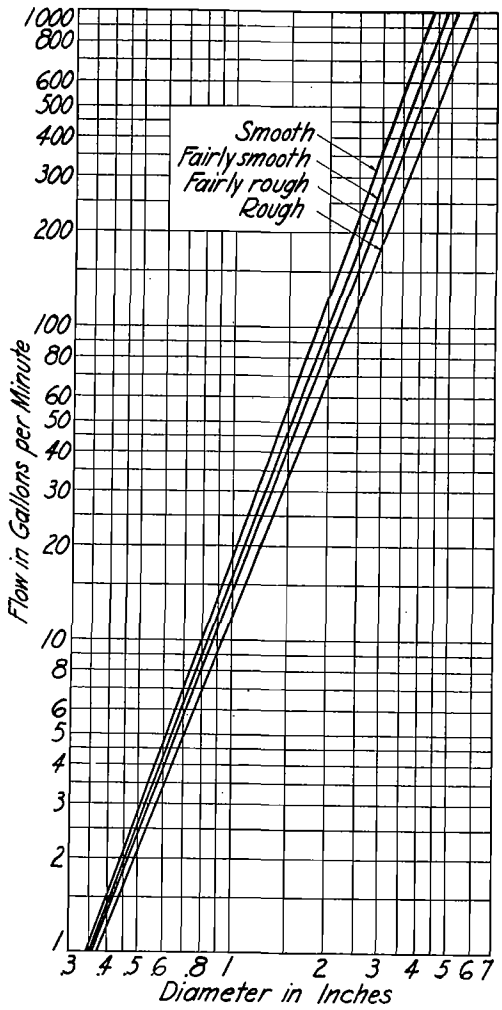

FIGURE 11.—*Relation of flow to diameter of pipe for friction loss of 10 lb/in.² per 100 feet.*

units; a curve (fig. 6) for estimating the expected demand in gpm for total load in fixture units; four charts (figs. 7 to 10) giving the capacity of pipes relative to diameter, roughness, and friction loss in head; a chart (fig. 11) showing the relation of flow to diameter for a given friction loss and for different degrees of pipe roughness; and a table (table 604–III(*b*)) giving suggested allowances for standard pipe fittings, in equivalent lengths of pipe of the same diameter. A table (table 604–III(*c*)) giving the nominal and actual diameters of new copper tubing, new steel pipe, and new brass pipe (I. P. S.) and a table (table 604–III(*d*)) illustrating the effects of corrosion and caking on the capacities of water-supply pipes are included as pertinent general information useful in the selection of serviceable pipe sizes.

TABLE 604–III(*a*).—*Fixture-unit ratings for estimating water-supply demands* [1]

Fixture and type of installation [2]	Number of fixture units [3]
Lavatory or washbasin:	
Public or office toilet	2
Private	1
Water-closet flush valve:	
Public or office toilet	10
Private	6
Water-closet flush tank:	
Public or office toilet	5
Private	3
Urinals, public or office toilets:	
Pedestal-urinal flush valve	10
Wall- or stall-urinal flush valve	5
Wall- or stall-urinal flush tank	3
Bathtub or separate shower head:	
Public or office	4
Private	2
Bathroom group, private:	
With flush-valve supply	8
With flush-tank supply	6
Separate shower head	2
Kitchen sink:	
Public, hotel, or restaurant	4
Private	2
Service sink [4]	3
Laundry trays (1 to 3) or combination fixture	3

[1] For supply outlets likely to impose a continuous demand when other fixtures are in extensive use, add the estimated continuous demand to the total demand for fixtures. For example, 5 gpm for a sill cock or hose connection is a liberal but not excessive allowance.

[2] Fixtures not listed in the table, if installed in relatively small numbers compared to the rated fixtures, may usually be safely ignored in estimating for the building main and large distributing branches. If installed in sufficiently large numbers to justify their consideration, they may be assigned fixture-unit ratings on the basis of a comparison with a rated fixture that uses water in similar quantities and at similar rates. For example, if washsinks or washtroughs with multiple supply outlets are to be installed, each supply outlet may be considered as comparable in demand to that of a washbasin in public service.

[3] The ratings given in the table are for the total hot- and cold-water demand. The engineer will need to exercise judgment in estimating separately for hot- and cold-water demands, depending to a large extent on conditions. The following is suggested as ample allowances under favorable conditions: For main hot-water branches allow ¾ of the total fixture units as given by the table for all fixtures using hot water; for main cold-water branches compute the total fixture units separately for fixtures that are and are not supplied with hot water and add ¾ of the total for fixtures that are supplied with hot water to the total for fixtures that are supplied with cold water only. If the character of the water is such as to produce corrosion and caking in the hot-water lines, it may be advisable either to allow the full table rating in estimating the demand for hot-water branches or to allow for a decrease in diameter by selecting the next larger size of pipe than that indicated by the computed estimate.

[4] Ignore demands for service sinks except for hot-water supply and that for the cold-water branch to the fixture itself. Other fixtures, similarly used out of hours, may be treated similarly.

Application of Flow Charts, Figures 7 to 10.—The chart in figure 7 applies to smooth new copper tubing with recessed (streamlined) soldered joints and to the actual sizes of the types indicated on the diagram. It may be applied also to any correspondingly smooth pipe such as brass pipe (I. P. S.) with recessed fittings by taking into account any differences in actual diameter from the diameters shown

in figure 7. (See fig. 11 for variation in flow with variation in diameter for different degrees of roughness.)

The chart in figure 8 applies to new wrought-iron or steel (fairly smooth) pipe and to actual diameters of standard-weight pipe.

The chart in figure 9 applies to fairly rough pipe and to actual diameters which in general will be less in service than the actual diameters of the new pipe of the same kind. Hence, for close estimates in the selection of pipe sizes it will be necessary also to estimate the probable change in diameter in service and to apply a correction, or otherwise to make an ample allowance.

The chart in figure 10 applies to very rough pipe and actual diameters. Again, close estimates in the selection of serviceable sizes will require estimates of the probable condition of the pipe and change of diameter in service. In this connection, if the character of the water is such as to produce a material change in diameter by reason of corrosion or caking or both, it will be safe to assume that the pipe falls in the category of very rough pipe.

In many cases, for either moderately or extremely bad conditions, it will be possible to make a satisfactory selection of serviceable pipe sizes for water-distributing systems without making specific estimates of the probable change in diameter. For example, if the amount of corrosion or caking to be expected is small, it will, in most instances, be sufficient to refer to figure 9. Likewise, it will be sufficient in many cases to refer to figure 10 without specific corrections for bad conditions in respect to corrosion and deposit. If there is a wide margin of capacity over the estimated demand, it will ordinarily be safe to select the size indicated by the applicable chart. If the indicated size is on the border line, either the next larger size than that indicated should be installed or the effects of probable changes in diameter in service should be investigated. In all cases the engineer should bear in mind that small distributing pipes, especially hot-water pipes, are likely to be completely closed after a few years in service if corrosion and caking are excessive. (See table 604–III(*d*), pt. III, for relative effects on different pipe sizes.)

TABLE 604–III(*b*).—*Allowance in equivalent length of pipe for friction loss in valves and threaded fittings*

Diameter of fitting	Equivalent length of pipe for various fittings						
	90° standard ell	45° standard ell	90° side tee	Coupling or straight run of tee	Gate valve	Globe valve	Angle valve
Inches	*Feet*	*Feet*	*Feet*	*Feet*	*Feet*	*Feet*	*Feet*
⅜	1	0.6	1.5	0.3	0.2	8	4
½	2	1.2	3	.6	.4	15	8
¾	2.5	1.5	4	.8	.5	20	12
1	3	1.8	5	.9	.6	25	15
1¼	4	2.4	6	1.2	.8	35	18
1½	5	3	7	1.5	1.0	45	22
2	7	4	10	2	1.3	55	28
2½	8	5	12	2.5	1.6	65	34
3	10	6	15	3	2	80	40
3½	12	7	18	3.6	2.4	100	50
4	14	8	21	4.0	2.7	125	55
5	17	10	25	5	3.3	140	70
6	20	12	30	6	4	165	80

The friction loss in threaded fittings relative to the friction loss in straight pipe of the same diameter for the same velocity of flow through both will vary widely depending on the smoothness to which the ends of the pipe are reamed and on the space left between the ends of the pipe in making the joints. The allowances in table 604–III(*b*), given for the most part in round numbers, are reasonable allowances for reasonably good workmanship with nonrecessed threaded fittings. For recessed threaded fittings and streamlined soldered fittings one-half the allowances given in the table will be ample. Ordinarily, for small buildings (residences) and for small sizes of pipe (1½-inch and smaller) allowances for loss in fittings may be safely ignored if the available pressure for friction loss is large with respect to the maximum allowable friction loss on which the selection of sizes is based.

TABLE 604–III(*c*).—*Actual diameters corresponding to nominal diameters of different kinds of pipe*

Nominal diameters	Actual inside diameters						
	Types of copper tubing			Steel [1]		Brass (I. P. S.)	
	K	L	M	Standard	Extra strong	Standard	Extra strong
Inches	*Inches*	*Inches*	*Inches*	*Inches*	*Inches*	*Inches*	*Inches*
⅜	0.40	0.43	0.45	0.49	0.42	0.49	0.42
½	.53	.55	.57	.62	.55	.63	.54
¾	.75	.79	.81	.82	.74	.82	.74
1	1.00	1.03	1.06	1.05	.96	1.06	.95
1¼	1.25	1.27	1.29	1.38	1.28	1.37	1.27
1½	1.48	1.51	1.53	1.61	1.50	1.60	1.49
2	1.96	1.99	2.01	2.07	1.94	2.06	1.93
2½	2.44	2.47	2.50	2.47	2.32	2.50	2.32
3	2.91	2.95	2.98	3.07	2.90	3.06	2.89
3½	3.39	3.43	3.47	3.53	3.36	3.50	3.36
4	3.86	3.91	3.94	4.03	3.83	4.00	3.82
5	4.81	4.88	4.91	5.05	4.81	5.06	4.81
6	5.74	5.85	5.88	6.07	5.76	6.13	5.75

[1] For the most part, wrought-iron pipe corresponds in size to the corresponding weights of steel pipe, differing by not more than 0.01 inch in diameter for nominal diameters of 2½ inches and smaller and by not more than 0.02 inch for nominal diameters of from 3 to 6 inches.

TABLE 604–III(*d*).—*Illustration of the probable effects of corrosion and caking in service on the capacities of water pipes*

[Steel or iron pipe (standard)]

Nominal diameter (inches)	New, fairly smooth		Corroded, slightly caked, fairly rough			Badly caked, very rough			Very badly caked, very rough		
	Actual diameter	Flow [1]	Assumed diameter	Flow [1]	Percentage of flow in new	Assumed diameter	Flow [1]	Percentage of flow in new	Assumed diameter	Flow [1]	Percentage of flow in new
	Inches	*gpm*	*Inches*	*gpm*		*Inches*	*gpm*		*Inches*	*gpm*	
⅜	0.488	2.45	0.438	1.75	71.4	0.338	0.97	39.6	0.188	0.26	10.6
½	.618	4.55	.568	3.30	72.6	.468	2.02	45.4	.318	.84	18.5
¾	.820	9.60	.770	7.20	75.0	.670	4.65	47.4	.520	2.60	27.1
1	1.04	18.0	.99	13.6	75.6	.89	8.75	48.6	.74	5.85	32.5
1¼	1.37	37.6	1.32	28.5	75.8	1.22	19.1	50.7	1.07	13.7	36.4
1½	1.60	56.0	1.55	42.5	75.9	1.45	29.8	53.2	1.30	22.6	40.4
2	2.06	108.0	2.01	82.4	76.4	1.91	59.1	54.6	1.76	47.7	44.0
2½	2.46	173.0	2.41	134	76.6	2.31	94.5	54.7	2.16	79.0	45.7
3	3.06	310	3.01	238	76.8	2.91	170	54.8	2.76	147	47.4
4	4.02	630	3.97	485	77.0	3.87	345	54.8	3.72	310	49.2
5	5.04	1,125	4.99	880	77.7	4.89	617	55.0	4.74	575	51.1
6	6.05	1,805	6.00	1,420	78.6	5.90	993	55.2	5.75	930	51.5

[1] Flow is approximate for friction loss of 10 lb/in.² per 100 feet of pipe.

Estimating for Continuous Demands on the Building Water Main.—The water demand for hose connections or sill cocks is frequently the cause of inadequate water supply and sometimes of complete failure in water supply on the upper floor of a building, especially if the branches to the hose connections are sized for the same permissible friction loss per hundred feet of pipe as the branches and risers to the highest level in the building. Somewhat the same condition exists in regard to the branches to fixtures taken off from the building main. There are several ways by which robbing of upper-floor fixtures of water by hose connections and other branches from the building main can be prevented: (1) by selecting the sizes of pipe for the different branches so that the total friction loss in each lower branch is equal to or greater than the total loss in the riser including both friction loss and loss in static pressure; (2) by throttling each such branch by means of a valve until the preceding balance is obtained; (3) by increasing the sizes of the building main and risers over that required merely to meet the maximum permissible friction loss; or (4) by any combination of these ways. It will materially aid in obtaining the desired result if all branches from the building main for basement fixtures and other demands on approximately basement level are taken off from the side branches of tees and all branches to risers are taken off from the straight runs of dividing tees. (See table 604–III(*b*), pt. III, for comparative friction losses in side branches and straight run of tees.)

In buildings where the service pressure is sufficiently greater than required to supply the upper floors of the building, thus permitting the use of pressure-reducing valves, a better balance of pressure in the different levels will be obtained by installing pressure-reducing valves on all branches of the building main except those leading to risers and on the lower branches from risers to groups of fixtures than by installing a single pressure-reducing valve on the building main.

Rules for Determining Sizes of Water-Supply Pipes.—Because of variable conditions encountered it is impractical to lay down definite detailed rules of procedure for determining the sizes of water-supply pipes. The following steps are suggested as a logical order of procedure for large buildings:

1. Obtain the necessary information regarding the minimum daily service pressure in the area where the building is to be located.
2. If the building supply is to be metered, obtain information regarding friction loss relative to rate of flow for meters in the range of sizes likely to be used. Friction-loss data in the form of curves can be obtained from most manufacturers of water meters.
3. Obtain information regarding the character of the water as to hardness and acidity. This information should be available from the water department and is important in determining material suitable for use.
4. Obtain all available local information regarding the use of different kinds of pipe with

respect both to durability and to decrease in capacity with length of service in the particular water supply.

5. Determine the kind of pipe (material) to be used. This decision will ordinarily be made from considerations of the probable life of the building, durability of material, relative cost and availability of different materials, and ease of replacement in case of failure.
6. Estimate the supply demand for the building main and for risers by totaling the fixture units on each, table 604–III(*a*), and then by reading the corresponding ordinate from applicable curve of figure 6.
7. Estimate continuous-supply demands in gpm such as that for lawn sprinklers and air conditioning, and add the sum to the total demand for fixtures. The result is the estimated supply demand for the building main.
8. Decide what is the desirable minimum pressure that should be maintained at the valve of the highest fixture in the water-distributing system under the estimated maximum demand. If the highest group of fixtures contains automatic flush valves, the pressure for the group should be at least 15 lb/in.^{2} for satisfactory operation. For flush-tank supplies and fairly constant service pressure, it may be safely reduced to 8 or 10 lb/in^2.
9. Determine the elevation of the highest fixture or group of fixtures above the street main or other source of supply. Multiply this difference in elevation in feet by 0.434. The result is the loss in static pressure in pounds per square inch.
10. Subtract the sum of loss in static pressure and the pressure to be maintained at the highest fixture from the average minimum daily service pressure. The result will be the pressure available for friction loss in the supply pipes, if no water meter is used. If a water meter is to be installed, the friction loss in the meter (see step 2) for the estimated maximum demand should also be subtracted from the service pressure to determine the pressure available for friction loss in pipes.
11. Lay out a sketch of the building water-supply system from the street main or other source of building supply, and determine: (a) the developed length of the building main; (b) the developed length from the street main to the foot of each riser branching from the building main; and (c) the greatest developed length of pipe from the street main to the top of any riser. If close estimates are desired, compute the "equivalent length of pipe" for all fittings in each developed length of pipe and add the sum to the developed length. The pressure available for friction loss in pounds per square inch, divided by the greatest developed length of pipe in feet, times 100, will be the average permissible friction loss per 100-foot length of pipe. If a pressure-reducing valve is used in the building main, the permissible friction loss will be computed from the pressure on the building side of the reducing valve and the developed length from the valve. In general, a velocity greater than 15 feet per second in the building main should not be employed, as objectionable line noise is likely to result.
12. To find the size of building main needed, turn to the flow chart (figs. 7 to 10) applicable to the conditions of the particular case. The diameter of pipe on or next above the coordinate point corresponding to the estimated total demand (see steps 6 and 7) and the permissible friction loss (see step 11) will be the size needed up to the first branch from the building main.
13. The required size of the water-distributing pipes within a building may be determined by sections, by referring to the applicable flow chart, using the average permissible friction loss and the estimated maximum load carried by the section. If quiet of operation is an essential consideration, line noises and water-hammer can be guarded against by basing the sizes of risers and branches on a low maximum allowable velocity in the system. The latter is a practical and safe method of selecting sizes of supply pipes, if care is also taken to see that the permissible friction loss for the system as a whole is not exceeded in risers or branches of the distributing system.

Building Mains and Water-Distributing Pipes for Small Buildings.—It may be more desirable at times to select water-supply pipes, including the building main, from considerations of velocity as well as on the basis of the permissible

friction loss. This method of selecting pipe sizes for building mains and water-distributing pipes may be illustrated by applying it to particular types of buildings in table 604–III(*e*).

TABLE 604–III(*e*).—*Water-demand estimates for residential types of buildings (flush-tank supply)*

Building types as to number and kind of fixtures	Kind of demand			Total fixture units		Total demand	
	Bathrooms	Kitchen sinks	Groups of 1 to 3 laundry trays	Main and cold-water branch	Hot-water branch	Main and cold-water branch[1]	Hot-water branch
	Number	*Number*	*Number*	*Number*	*Number*	*gpm*	*gpm*
A	1	1	1	11	6	12	8
B	2	1	1	17	9	16	10
C	3	2	1	25	12	20	12
D	4	4	2	38	20	25	16
E	8	8	3	73	37	35	24
F	16	16	4	140	69	52	34

[1] Add any continuous demand to fixture demand to obtain total demand on building main.

Reasonably satisfactory estimates for total demands for garden-hose connections or sill cocks are as follows:

Number of outlets:	*Estimated demand, gpm*
1	5
2	9
3	12
4	14
5 or more	3 gpm per outlet.

Table 604–III(*e*) gives the estimates of water demands for several types of residential buildings obtained by applying table 604–III(*a*), part III, and figure 6. Types A, B, and C represent separate dwellings with from 1 to 3 bathrooms, and types D, E, and F represent small apartment houses.

The following examples illustrate the uses of the tables and curves in estimating pipe sizes:

Example 1

Assume for the buildings A, C, D, and F (table 604–III(*e*), pt. III) that a maximum developed length of pipe from the street main to the highest fixture will have to be 110 feet, that the minimum service pressure is 45 lb/in^2, that the elevation of the highest fixture above the water main is 30 feet, that it is desirable in order to avoid annoying line noises to hold the maximum velocity in the water supply to 10 fps, that all water closets have flush-tank supply, and that the character of water is such as to make figure 8 most applicable for determining the sizes needed. The loss in static pressure is $30 \times 0.434 = 13.0$ lb/in^2. Then, $100(45-13-15) \div 110 = 15.4$ lb/in^2, is the allowable friction loss per hundred feet. From these assumed data and the data in table 604–III(*e*), the requirements for the building main and for the cold-water and hot-water branches from the building main may be tabulated for each type of building by reference to figure 8 as follows:

Building type	Building main			Hot-water branch		
	Supply required	Diameter of pipe required	Velocity for required supply	Supply required	Diameter of pipe required	Approximate velocity
	gpm	*Inches*	*fps*	*gpm*	*Inches*	*fps*
A	12	¾	7.5	8	¾	4.9
C	20	1	7.6	12	¾	7.5
D	25	1¼	5.5	16	1	5.9
F	52	1½	8.3	34	1¼	7.2

If the water-supply pipes are selected for a maximum limit of velocity of 10 fps, the sizes selected would be as given in the table above. If selected for a maximum limit of 6 fps, a size larger than given in the table would be selected for the building main of buildings A, C, and F and for the hot-water branch of buildings C and F.

Example 2

Assume an office building of four stories and basement, pressure on building side of pressure-reducing valve of 55 lb/in.^{2}, an elevation of highest fixture above pressure-reducing valve of 45 feet, a developed length of pipe from the pressure-reducing valve to the most distant fixture of 200 feet, and fixtures to be installed as in the following table with flush valves for water closets and stall urinals.

Kinds of fixtures	Fixture units and estimated demands					
	Building main			Branch to hot-water system		
	Fixtures	Fixture units	Demand	Fixtures	Fixture units	Demand
	Number	*Number*	*gpm*	*Number*	*Number*	*gpm*
Water closets	130	1,300	-------	-------	-------	-------
Urinals	30	150	-------	-------	-------	-------
Shower heads	12	48	-------	12	36	-------
Lavatories	130	260	-------	130	195	-------
Service sinks	27	([a])	-------	27	61	-------
Totals	-------	1,758	300	-------	292	86

[a] Ignored.

Allowing for 15 lb/in.^{2} at the highest fixture under maximum demand of 300 gpm, the pressure available for friction loss is found by

$55-(15+45\times0.434)=20.47$ lb/in^2. The allowable friction loss per 100 feet of pipe is therefore $100\times20.47\div200=10.23$ lb/in^2.

If copper tubing or brass pipe is to be used and the character of the water is such that only slight changes in the hydraulic characteristics may be expected, the sizes needed for the building main and branch to the water heater may be determined safely on the basis of 10 lb/in.^{2} friction loss by referring the demand estimates to figure 7. The following tabulation shows the results of referring the demand data to each of the four figures:

Demand	Required size indicated by—			
	Figure 7	Figure 8	Figure 9	Figure 10
	Inches	*Inches*	*Inches*	*Inches*
Building main, 300 gpm	3	3	3½	4
Branch to heater, 86 gpm	2	2	2	2½

If steel or iron pipe is to be used, figure 8 is appropriate for determining sizes for the most favorable water conditions. If the water is hard or corrosive, figure 9 or figure 10, depending on the estimate of conditions, will be found more appropriate. For extremely hard water, it will be advisable to make additional allowances for reduction of capacity of hot-water pipes in service.

The sizes of risers and branches to risers may be determined in the same manner as the size of building main—by estimating the demand for the riser from the estimate curve and applying the total demand estimate for the branch, riser, and sections thereof to the appropriate flow chart, with additional allowances, if considered necessary, for decrease in diameter in service.

Example 3

Assume that building type C, table 604–III(*e*), part III, has an expanse of lawn and that three outside hose connections are to be installed. It is assumed that all three outlets may be in use simultaneously for fairly long periods of time. The estimated demand for lawn-sprinkling purposes will therefore be 12 gpm. The estimated demand for the fixtures of the building will be the same as given in example 1, 20 gpm. The total demand on the building main will be 20+12, or 32 gpm.

Par. 701. Quality of Fixtures.—Federal Specification WW–P–541a is the accepted standard for plumbing fixtures insofar as it covers the material, kind, quality, size, and style of the different fixtures used. In cases where this does not apply, however, the authority having jurisdiction over plumbing may approve other standards, which may be those developed by a governmental department, by the industry concerned, or otherwise. As in the case of plumbing materials, a number of Commercial Standards and Simplified Practice Recommendations, which may be directly applicable or may furnish useful information, have been developed, and have been published by the National Bureau of Standards. These include the following:

Commercial Standards

Staple porcelain (all-clay) plumbing fixtures (1929) mimeographed CS4–29
Staple vitreous china plumbing fixtures (1936) CS20–36
Staple seats for water-closet bowls (1931) CS29–31
Sanitary cast-iron enameled ware (1940) CS77–40

Simplified Practice Recommendations

Hospital plumbing fixtures (1930) R106–30

Inquiries concerning these publications should be addressed to the Division of Trade Standards and to the Division of Simplified Practice, respectively, both at the National Bureau of Standards, Washington, D. C.

Par. 705. Fixture Strainers.—In order to obtain quick emptying and thorough drainage of the fixture and effective scouring of the fixture drain, the outlet from the fixture and the passages through the strainer should have cross-sections at least equal to that of the fixture drain. There are no generally recognized standards covering fixture outlets and strainers. Hence, it is not feasible to state in this manual definite detailed specifications for strainers.

Inadequate passages through the strainers and outlets of such fixtures as kitchen sinks, lavatories, bathtubs, and laundry trays are probably the most common cause of sluggish drainage and clogged fixture drains. Carelessness in the use and care of fixtures, such as allowing materials (food fragments, lint, hair, etc.) to collect and be retained on the strainers

will hasten and aggravate the drainage difficulties caused by inadequate fixture outlets, and will induce these difficulties in a well-designed fixture and drain.

The manufacturer, builder, and plumber cannot entirely guard against the troubles arising from careless use. The practice of increasing the size of the fixture drain relative to that of the fixture outlet, as is sometimes resorted to, is likely to increase rather than to alleviate drainage difficulties, because of lower velocity in the drain. (See par. 1010, pt. III, for further discussion of sink installations.)

Par. 707. Swimming Pools.—Standards for design, equipment, and operation of artificial swimming pools are included in the regulations of many state departments of health. These for the most part are based on the "Report of the Joint Committee on Bathing Places," Conference of State Sanitary Engineers and American Public Health Association. This report is published by the U. S. Public Health Service as Supplement No. 139 to the Public Health Reports and is obtainable from the Superintendent of Documents, Washington, D. C., for 10 cents per copy.

In the design of any artificial swimming pool the standards above referred to should be followed. A summary of those sections applying to piping systems follows:

Under no circumstances should piping systems be so designed and constructed as to permit pool water to enter a potable-water-supply system nor waste water or sewage to enter the pool through backflow connections or interconnections.

Cross-connections or interconnections in the pool piping system whereby pool water may under some conditions enter a potable-water-supply system should be avoided (1) by providing for the admission of make-up water above the overflow elevation of the pool or by pumping from a pump suction well; (2) where filters are installed and filter washing with the recirculation pump is not feasible, a washwater pump of proper capacity should be installed and a suction well or small elevated tank used to supply water to the pump, the discharge to the suction well or tank being above the flow line. In no case should valved cross-connections, whereby water from a potable-water supply may be admitted directly to the recirculation system for the purpose of filter washing, be permitted.

No pool drains or drains from filters, where the recirculating system is used, should be directly connected to sewers. Such drains should discharge by an indirect connection to a properly trapped sump. (See ch. XI, pt. II.) Where such indirect connections are not possible, pumping of pool and filter-wash drainage may be necessary.

Par. 800. Acid or Chemical Wastes.—The disposal of acid or chemical waste requires special consideration. The materials to be used and the method of disposal may vary according to conditions and should be subject to the approval of the authority having jurisdiction over plumbing.

Par. 802. Minimum Sizes of Soil and Waste Pipes.—In a simple table of sizes applying generally to buildings of various sizes and plans, it is impossible to give the minimum sizes of soil and waste pipes actually required in particular buildings. In a building-drainage system the load or volume rate of flow in its different parts is not the sum of the rates of flow from the fixtures in which the load originated. As the sewage load passes through a building-drainage system there is a continuous increase in the time of flow over the time of flow into the system, with a corresponding decrease in the volume rate of flow past any given point in the system. For this reason, as the size of building-drainage systems increases (a greater number of fixtures and longer drains), there is a tendency toward continuous uniform flow as the distance from the fixtures increases. In a very large building the flow in the main building drain becomes continuous during the periods of heavy use of fixtures and fluctuates around the average rate of flow from all fixtures during such periods.

For example, assume that in 100 bathroom groups a water closet discharges 4 gallons once every 5 minutes, a bathtub 8 gallons every 16 minutes, and a lavatory 1.5 gallons every 3 minutes. The average flow from 1 bathroom group will be $\frac{4}{5}+\frac{8}{16}+\frac{1.5}{3}=1.8$ gpm. The average flow from 100 bathroom groups during the whole time all fixtures are being used at those average rates will be 100×1.8 or 180 gpm and

the flow in the building drain from 100 such groups will be continuous over that time and will fluctuate around that average.

In order to provide in a measure for the differences in capacity in terms of the number of fixtures (or fixture units), the requirements for sizes of plumbing drains are stated in five steps, two applying to stacks and three applying to building drains, as follows: (a) A simple table (table 805, pt. II) giving the permissible limits in fixture units for different sizes of soil and waste stacks when detailed plans of piping and distribution of fixtures are not submitted for approval; (b) a table (table 805(*b*)–III, pt. III) of limits for soil and waste stacks when detailed plans showing the complete proposed piping lay-out and the complete distribution of fixtures are submitted for approval of the authority having jurisdiction over plumbing; (c) a simple table (table 807, pt. II) giving the limits in fixture units for building drains and building sewers of different sizes when detailed plans are not submitted for approval; (d) a table of limits (table 807(*c*)–III, pt. III) for secondary branches, main building drains, and building sewers under nonpressure-drainage conditions when detailed plans showing the slopes, lengths, and diameters of the pipes of the proposed installation and showing the distribution of fixture units for each drain and branch are submitted to the authority having jurisdiction over plumbing for approval; and (e) a table (table 807(*d*)–III, pt. III) giving limits for primary branches, secondary branches, main building drains, and building sewers under pressure drainage when detailed plans showing slopes, lengths, diameters, and elevations of the lowest horizontal branch on each stack of the proposed installation are submitted to the authority having jurisdiction over plumbing for approval.

Par. 803. Fixture–Unit Ratings.—In general, fixtures are rated in fixture units on the basis of the average volume discharged, the average rate of discharge, and the average frequency of use. Fixtures not given a rating in table 803, part II, when installed in sufficient numbers to justify their consideration relative to the total load to be provided for, may be given the rating of some comparable fixture given in the table. For example, a bedpan washer may be assigned the same rating as a water closet in public use. Similarly, other fixtures may be assigned the same rating as some fixture given in table 803, which has the same size of trap and fixture drain and uses water in comparable volumes and frequencies; or fixtures may be assigned ratings proportional to the cross-sections of fixture drains. It should be noted that ratings are given in integers in the scale of 1 to 10, and that no greater accuracy is required in assigning ratings for unusual or unlisted fixtures.

Par. 805. Sizes of Soil and Waste Pipes.—(*a*) Table 805, part II, is particularly applicable for buildings of one or two stories (one or two branch intervals) in which nothing is to be gained by considering the distribution of fixtures further than as controlled by the limits set on the number of fixture units on one horizontal branch. The table may be applied safely, but not economically, to buildings of any height.

Table 805(*b*)–III.—*Permissible limits in fixture units on soil and waste stacks*

Diameter	Limits in fixture units		
	In any branch interval for—		Maximum on 1 stack
	One branch interval only N	Two or more branch intervals $N/2n+N/4$	
Inches	*Number*	*Number*	*Number*
1¼	1	1	2
1½	3	2	8
2	6	6	24
3	32	$16/n+8$	80
4	240	$120/n+60$	600
5	540	$270/n+135$	1, 500
6	960	$480/n+240$	2, 800
8	1, 800	$900/n+450$	5, 400
10	2, 700	$1, 350/n+675$	8, 000
12	4, 200	$2, 100/n+1, 050$	14, 000

(*b*) The provisions of section 805(*b*), part II, and table 805(*b*)–III, part III, are intended to permit an economical use of pipe in regard to sizes when the building is of sufficient height to render it safe to install a greater number of fixtures on a stack of given diameter than is permitted under table 805, part II; and they are especially applicable to buildings of three stories (three branch intervals) or more in height and to systems with relatively small horizontal branches. It is essential in applying section 805(*b*), part II, that the number of fixture units in any one branch interval shall be

in accordance with the quantity ($N/2n+N/4$) (where n is the number of branch intervals and N is the permissible number of fixture units for a stack having one branch interval only) and that the total number of fixture units on the entire stack shall be within the limits of table 805(*b*)–III, part III.

Illustration of Application of Table 805(b)–III

Assume a total of 580 fixture units to be installed on 1 stack of a building of 10 branch intervals (10 stories) in which the maximum in any one branch interval will be 76 fixture units. Referring to table 805(*b*)–III, the maximum permissible number of fixture units on one 4-inch soil stack is found to be 600, provided that the permissible number of fixture units in 1 branch interval as computed by the formula, $120/n+60$, is not exceeded. $120/10+60=72$ fixture units which is less than 76, the actual number to be installed. A 4-inch stack would not be permissible; but without further computation it is obvious that a 5-inch stack would be permissible under the provision. Likewise, it is obvious from the preceding computation that a 4-inch stack would be permissible in a 10-story building where the total fixture units on the stack does not exceed 600 and the total in any branch interval does not exceed 72.

Referring to table 805, part II, which represents the conventional form of stating minimum requirements in plumbing codes and is the requirement applying in this manual in case detailed plans are not submitted for approval, it will be seen that a 6-inch stack would be required for 580 fixture units under the requirements of that table.

Par. 807. Horizontal and Primary Branches.—Section 807, part II, provides for three different limits for the maximum permissible number of fixture units on building drains and building sewers in the sanitary system, each applicable under specifically defined conditions. Table 807, part II, which is repeated in this part of the manual for convenience in reference, gives mandatory limits for the number of fixtures on primary branches for nonpressure drainage. These limits also apply to the main building drain and building sewer for nonpressure-drainage conditions in case the building drain has only one primary branch of 3-inch or greater diameter.

Section 807(*c*), part II, provides for (and table 807(*c*)–III, on p. 49, gives) permissible limits in fixture units for secondary branches of the building drain, the main building drain, and building sewer of given diameter and slope, applicable when the building drain has two or more primary branches of 3-inch or greater diameter and when the lowest horizontal branch or fixture drain is less than 3 feet above the grade line of the building drain.

Section 807(*d*), part II, provides for (and table 807(*d*)–III, on p. 52, gives) limits applicable when all fixture branches and horizontal branches connected directly to the stacks are 3 feet or more above the grade line of the building drain and no fixture branch or horizontal branch is connected directly to the building drain.

The limits given in the tables applicable under the provisions of sections 807(*b*), 807(*c*), and 807(*d*), in part II, are in general based on the estimated peak load and on one-half the estimated flow capacity of old pipes under the defined applicable conditions in each case. The permissible rate of increase in allowable load under provisions of sections 807(*c*) and 807(*d*) is also based on one-half the theoretical rate of increase in the flow capacity of the drains. Hence, it is to be assumed that a building-drainage system designed and constructed in accordance with these tables and rules will operate safely and effectively unless the estimated peak load (design load) is exceeded by more than 100 percent, which, by an examination of the probability of its occurrence, may be shown to be an extremely remote possibility.

The purpose of this proposed innovation in design methods is to enable the engineer to specify sizes of pipes for building drains that will provide effective transportation of sewage as well as effective scouring action. This end cannot be attained with both economy and reasonable assurance of safety if the sizes of building drains are limited by a single simple table of limits applying to all sizes and types of buildings, such as table 807–III.

TABLE 807–III.—*Capacities of building drains under section 807(b), part II*

Diameter of pipe (inches)	Permissible number of fixture units				
	Horizontal branch at minimum permissible slope or greater	Primary branch			
		1/16-inch fall per foot	1/8-inch fall per foot	1/4-inch fall per foot	1/2-inch fall per foot
	Number	*Number*	*Number*	*Number*	*Number*
1¼	1	-------	-------	2	2
1½	3	-------	-------	5	7
2	6	-------	-------	21	26
3 waste only	32	-------	36	42	50
3 soil	20	-------	24	27	36
4	160	-------	180	216	250
5	360	360	400	480	560
6	600	600	660	790	940
8	1,200	1,400	1,600	1,920	2,240
10	1,800	2,400	2,700	3,240	3,780
12	2,800	3,600	4,200	5,000	6,000

Table 807–III is particularly applicable to comparatively simple systems with few stacks and branches but the limits may be applied to systems of any size without the restrictions governing the application of section 807(*c*) and section 807(*d*), part II.

TABLE 807(*c*)–III.—*Limits in capacities of building drains under the provisions of section 807(c), part II*

[Nonpressure drainage]

Diameter (inches)	Limits in fixture units							
	Primary branch				Secondary branch or main			
	1/16-inch fall per foot	1/8-inch fall per foot	1/4-inch fall per foot	1/2-inch fall per foot	1/16-inch fall per foot	1/8-inch fall per foot	1/4-inch fall per foot	1/2-inch fall per foot
	Number	*Number*	*Number*	*Number*	*Number*	*Number*	*Number*	*Number*
2	-------	18	21	26	-------	-------	-------	-------
3	-------	24	27	36	-------	90	125	180
4	-------	180	216	250	-------	450	630	900
5	360	400	480	560	600	850	1,200	1,700
6	600	660	790	940	950	1,350	1,900	2,700
8	1,400	1,600	1,920	2,240	1,950	2,800	3,900	5,600
10	2,400	2,700	3,240	3,780	3,400	4,900	6,800	9,800
12	3,600	4,200	5,240	6,080	5,600	8,000	11,200	16,000

Table 807(*c*)–III is particularly applicable to the plumbing systems of buildings covering a relatively large area with several widely separated soil stacks. It will be noted that in accordance with the rules governing the application of the table, the limits for primary branches will determine the size of pipe required unless the total length of all branches (primary and secondary) of the building drain is more than 40 feet.

Rules for Applying Section 807(c), Part II, and Table 807(c)–III, Part III

1. Lay out the foundation plan of the building to scale, as in figure 12A, and mark thereon the position of all soil and waste stacks in vertical projection.
2. Lay out on the plan the most direct practical lines for the building drain and its branches that can be readily obtained by use of standard bend and wye fittings, observing requirements regarding bearing walls. Make, if possible, no turn in direction greater than 45° and not greater than 90° in any case, with no angle between branches greater than 45°.
3. Scale off the developed length of each primary and secondary branch to the nearest foot and mark its length on the plan.
4. Determine the total number of fixture units on each soil and waste stack, from table 803, part II, and note the numbers on the plan.
5. Determine the required size of each soil and waste stack in accordance with section 805, part II, taking into account the restrictions as to limits in one branch interval in relation to the height of the stack system and the fact that each stack shall be at least equal in diameter to the largest horizontal branch connected thereto.
6. Determine the most convenient continuous slope between the minimum permissible and ½-inch per foot fall that can be installed in relation to the elevation of the street sewer.
7. Determine the required size of each primary branch for the selected slope by table 807–III and note on the plan.
8. Starting with the two primary branches farthest upstream, compute the permissible number of fixture units for each successive secondary branch and the main building drain by means of the following equation:

$$FU = P\ [1 + a\ (\Sigma L - 40)],$$

in which

FU = the maximum permissible fixture units on the secondary branch in question;

P = the permissible fixture units on one primary branch of the selected slope by table 807–III;

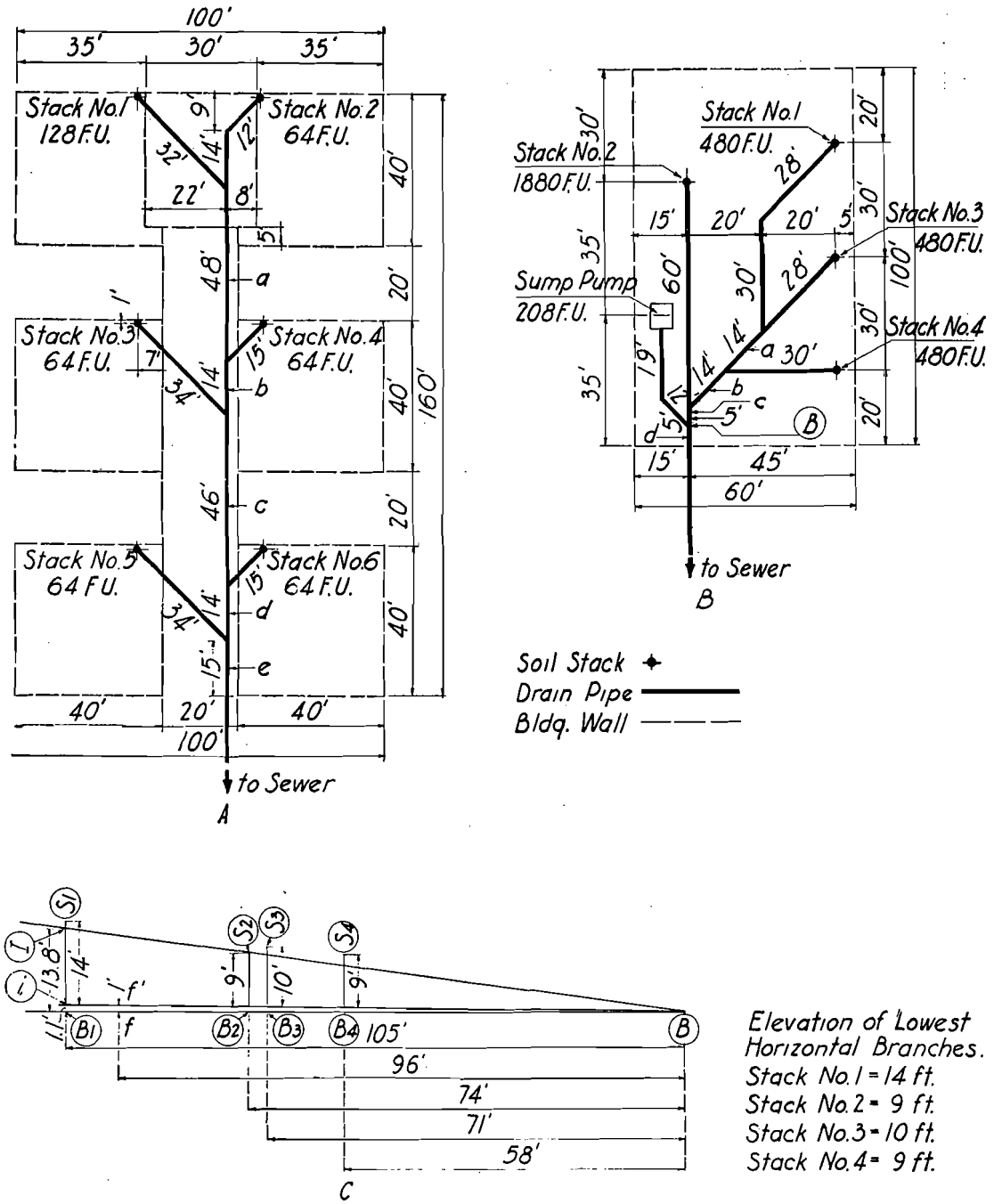

FIGURE 12.—*Illustrative graphs for applying sections 807(c) and (d).*

a = a numerical factor depending on the slope as shown in the following tabulation; and

ΣL = the sum of the lengths of all primary and secondary branches greater than 10 feet in length upstream from the particular secondary branch for which a computation is being made.

Values of a	Fall in inch/foot
0.010	1/16
.007	1/8
.005	1/4
.004	1/2

9. The diameter of the building sewer shall be the same as for the main building drain if it is laid at the same slope as or at a greater slope than the building drain. If the building sewer is laid at a smaller slope than the building drain, its capacity in fixture units by table 807(*c*)–III, part III, shall be equal to or greater than the total fixture units on the system.
10. The preceding rules assume that all primary branches enter the building drain from the side at the selected slope. If any primary branch, horizontal branch, or stack enters the building drain from the top or at a slope greater than that of the building drain, rule 8 for increase in permissible number of fixtures shall not be applied to the primary or secondary branch immediately upstream from such entry or to the secondary branch or main immediately downstream from such entry connection, but the lengths of an upstream secondary branch and of a downstream branch from the entry connection may be employed in evaluating ΣL for succeeding downstream branches and the main building drain.
11. Rule 8 also assumes a clear passage through the building drain at the selected slope. If any obstruction is built into the building drain, as for example, a running trap (house trap) or a backwater trap, rule 8 shall not be applied to that part of the building drain in which such obstruction is set unless the last branch thereto enters the building drain at least 20 feet developed length upstream from such obstruction, and the limit in permissible fixture units on the main building drain shall not exceed the value given by the last computed limit by this rule except as provided in section 807(*d*), part II, for pressure drainage. This rule is not to be construed as prohibiting the use of a house trap or a backwater trap when drainage conditions require it, or as prohibiting the connecting of a primary branch or secondary branch within 20 feet from a house trap or backwater trap, but merely as a statement of the necessary modifications of the general rule if these devices are installed.
12. In no case shall the number of fixtures installed on a building drain of given diameter and slope exceed the limits given in table 807(*c*)–III, part III, unless all fixture branches or horizontal branches are more than 3 feet above the grade line of the building drain, thus permitting the application of the principles and rules for pressure drainage as provided for in section 807(*d*), part II.
13. When the limit in permissible number of fixture units for a given diameter and slope of a building drain has been exceeded by the application of rule 8, or where a junction with a larger branch of the building drain occurs, the value of P in the equation, $FU=P[1+a(\Sigma L-40)]$, will become the value for the larger diameter and succeeding computations will proceed as by rule 8, except that if the larger branch is a primary branch there shall be no increase in the permissible number of fixture units for the secondary branch or main immediately downstream from the junction over the permissible number of fixture units for a primary branch of that diameter and slope unless the primary branch exceeds 20 feet in length.

Illustrative Computation

Referring to figure 12A, assume that the building drain and building sewer are to be laid with a uniform fall of 1/8 inch per foot. By table 807(*c*)–III, part III, the permissible load for a 4-inch primary branch with that slope is 180 fixture units, and by rule 8 the value of a for that slope is 0.007. Hence the equation (rule 8) becomes: Permissible fixture units, $FU=180[1+0.007(\Sigma L-40)]$. If the actual number of fixture units on each stack is as indicated in

figure 12A, all primary branches of the building drain may be 4-inch since the maximum is 128 on any branch and the limit by table 807(*c*)–III is 180 fixture units. Starting with primary branches Nos. 1 and 2, the necessary computation for determining permissible limits for the various secondary branches a, b, c, and d and on the main building drain e, may be summarized as follows:

Branch	ΣL	Permissible fixture units $P[1+0.007(\Sigma L-40)]$	Actual fixture units
	Feet		
a	58	180[1+0.007(58−40)]=202	128+64=192
b	121	180[1+0.007(121−40)]=282	192+64=256
c	169	180[1+0.007(169−40)]=342	256+64=320
d	230	180[1+0.007(230−40)]=419	320+64=384
e (main)	278	180[1+0.007(278−40)]=480	384+64=448

It will be noted that for the main building drain e the computed limit, 480 fixture units, is greater than the limit for nonpressure drainage set in table 807(*c*)–III, part III, for a 4-inch building drain with a uniform fall of ⅛ inch per foot, 450 fixture units. However, since the actual number of fixture units to be carried (448) is less than the limit (450), the rules would permit the use of a 4-inch drain at the assumed slope for the entire building, which corresponds to an eight-story apartment house with seven apartments on each floor.

Assume again that the same floor plan is employed for a nine-story building, increasing the total number of fixture units on the different stacks to 144 for stack 1 and to 72 for each of stacks Nos. 2 to 6, inclusive, and that the building drain is to be laid at a uniform fall of ¼ inch per foot. In the same manner as for the first illustration, the equation for computing permissible limits for a 4-inch branch at ¼-inch fall per foot becomes

$$FU=216[1+0.005(\Sigma L-40)];$$

and for a 5-inch branch at the same slope becomes

$$FU=480[1+0.005(\Sigma L-40)].$$

Branch	ΣL	Permissible fixture units $P[1+0.005(\Sigma L-40)]$	Actual fixture units
	Feet		
a	58	216[1+0.005(58−40)]= 235	144+72=216
b	121	216[1+0.005(121−40)]= 303	216+72=288
c	169	216[1+0.005(160−40)]= 355	288+72=360
c	169	480[1+0.005(160−40)]= 790	288+72=360
d	230	480[1+0.005(230−40)]= 936	360+72=432
e (main)	278	480[1+0.005(278−40)]=1,051	432+72=504

Since for secondary branches a and b the actual number of fixture units is less than either the computed permissible number or the set limit of 630 fixture units by table 807(*c*)–III, part III, a 4-inch building drain with ¼-inch fall per foot may be installed to the beginning of branch c. For branch c the computed limit for a 4-inch drain is less than the actual number of fixture units, hence the size of branch c must be greater than 4-inch diameter and it becomes necessary to try 5 inches. Obviously, as shown by the second computation for branch c, it would not be necessary for the engineer to make any further computation in the case illustrated to determine the sizes required for branch d and the main building drain e, since the actual number of fixture units (504) on the system does not exceed either the computed limit (790) for branch c or the fixed limit (1,200) for a 5-inch drain as given by table 807(*c*)–III. However, the complete summarized computation is given by way of illustration.

Application of these rules to drains of ½-inch fall per foot and for other sizes of drain will be made in the same manner for all sizes of primary branches and for all lengths of primary and secondary branches.

TABLE 807(*d*)–III.—*Limits in capacities of building drains under the provisions of section 807(d), part II*

[Pressure drainage]

Diameter (inches)	Limits in fixture units							
	Primary branch				Secondary branch or main			
	1/16-inch fall per foot	⅛-inch fall per foot	¼-inch fall per foot	½-inch fall per foot	1/16-inch fall per foot	⅛-inch fall per foot	¼-inch fall per foot	½-inch fall per foot
	Number	*Number*	*Number*	*Number*	*Number*	*Number*	*Number*	*Number*
2	-------	-------	42	52	-------	-------	-------	-------
3	-------	48	54	72	-------	180	250	360
4	-------	360	432	500	-------	900	1,250	1,800
5	720	800	960	1,120	1,200	1,700	2,400	3,400
6	1,200	1,320	1,580	1,880	1,900	2,700	3,800	5,400
8	2,800	3,200	3,840	4,480	3,900	5,600	7,800	11,200
10	4,800	5,400	6,480	7,560	6,800	9,800	13,700	19,800
12	7,200	8,400	10,400	12,000	11,200	16,000	22,400	32,000

Table 807(*d*)–III is particularly applicable to large buildings in which basement fixtures and possibly first-floor fixtures are to be drained into a sump in such a manner that all direct connections of fixture branches and horizontal branches will be materially greater than 3 feet above the grade line of the building drain. In

computing the permissible limits for particular systems under the rules (which see) applying to pressure drainage, both sections 807(*c*) and 807(*d*), part II, apply.

Rules for Applying Section 807(d), Part II, and Table 807(d)-III, Part III

1. Lay out the building plan to scale as for the application of section 807(*c*), part II (see fig. 12B), and scale off the developed lengths of each primary and secondary branch.
2. For each stack in the system, determine the elevation of the lowest horizontal branch above the grade line of the building drain.
3. Scale off the developed length of pipe from the intersection, B, of the branch with the building drain to the lowest horizontal branch connection to the stack farthest upstream. Also, determine the developed length from B to the lowest horizontal branch on each of the other soil and waste stacks.
4. Lay off to a convenient scale a horizontal line (B_1B in fig. 12C) equal to or greater than the greatest developed length obtained by applying rule 3. Also, lay off in order on line B_1B from point B all other developed lengths as obtained by the application of rule 3 and designate the points on line B_1B as B_2, B_3, etc. At each of the points B_1, B_2, B_3, etc., erect lines perpendicular to B_1B. Also, on line B_1B, or on B_1B extended if necessary, lay off a length Bf equal to that in which a total fall of 1 foot would be given for the slope involved and erect the perpendicular line ff' equal to 1 foot and draw the straight line Bf' to intersect the perpendicular line from B_1. Designate the intersection as i. Then on each of the perpendicular lines from B_1, B_2, B_3, etc., lay off lengths from the line Bf' equal to the elevation of the lowest branches on each of the corresponding stacks above the grade line and designate the resultant points as S_1, S_2, S_3, etc. Then draw a straight line from point B such that at least one of the points S_1, S_2, S_3, etc., lies on the line and none of them lie below it. Extend the line to intersect the vertical line from point B_1, which intersection (designated as I) may be at or below point S_1, depending on the relative elevations of the lowest branches on the different stacks involved. Scale off the lengths B_1I and B_1i.
5. Select a value P from table 807(*c*)-III, part III, for primary branches corresponding to the slope of the drain such that the product $P\sqrt{B_1I/4B_1i}$ is equal to or greater than the number of fixture units to be carried by a primary branch and that the corresponding product $P_1\sqrt{B_1I/4B_1i}$ for the next smaller size is less than the number of fixture units to be carried by the primary branch in question. The larger of the two sizes will be the minimum permissible size for the primary branch in the particular case, provided that both the product $P\sqrt{B_1I/4B_1i}$ and the limit for a primary branch of that diameter in table 807(*d*)-III, part III, are each equal to or greater than the number of fixture units actually carried.
6. To obtain the permissible load limits for secondary branches and the main building drain of the particular system, proceed as by rule 8 applying to section 807(*c*), part II, starting in each case with the computed limits for primary branches as given by rule 5 above instead of the limits given in table 807(*c*)-III, part III.
7. If the slope of the building sewer is equal to or greater than the slope of the main building drain, it may be of the same nominal diameter as the main building drain arrived at by the application of the preceding rule 6. If at any point the slope of either the main building drain or the building sewer is decreased, the drain laid at the lower slope shall be increased in diameter, if necessary, so that its limit in capacity by table 807(*d*)-III, part III, at the slope laid, is equal to or greater than the load to be carried.

Illustration of Application of Rules for Pressure Drainage

For this illustration, assume that the building has a base area 60 by 100 feet, as illustrated in figure 12B; is 20 stories high; and will contain fixtures that total 3,528 units, distributed among four stacks, and a sump located as indicated in the figure. In this illustration, the drain from the sump pump, entering the main building drain at point B, is the last branch.

Now assume that the elevation above grade line of the lowest branch connected to each of the stacks is as follows: Stack 1, 14 feet; stack 2, 9 feet; stack 3, 10 feet; and stack 4, 9 feet; and that the slope of the building drain is ⅛-inch fall per foot. The developed length of drain from B to the lowest branch on stack 1 is $5+14+14+30+28+14=105$ feet. We now have the data for the scale laying out figure 12C as prescribed by rules 3 and 4. From the figure, $B_1I=13.8$ feet and $B_1i=1.1$ feet; from which $\sqrt{B_1I/4B_1i}=\sqrt{13.8/4.4}=1.77$, the factor by which the limits for primary branches as given in table 807(*c*)–III, part III, are to be multiplied to determine the allowable loads within the limits for primary branches by table 807(*d*)–III, part III, for the particular building and conditions assumed. Ordinarily, the required minimum size of a primary branch can be predicted by comparing the permissible loads for pressure drainage, table 807(*d*)–III, and the number of fixture units to be carried in the case at hand without going through the details of computation prescribed in rule 4. For example, in the present illustration the basic size for computing secondary branches will obviously be determined by the primary branch from stack 2, and the load, in this case 1,880 fixture units, lies between the permissible load of 1,320 fixture units for a 6-inch primary branch with ⅛-inch fall per foot by table 807(*d*)–III, and the limit in load, 3,200 fixture units, for an 8-inch primary branch at that slope. Hence, the secondary branch must be at least an 8-inch pipe and the trial computation becomes

$$1.77\times1{,}600=2{,}832 \text{ fixture units.}$$

Since 2,832 fixture units is less than the limit (table 807(*d*)–III) for an 8-inch primary branch of ⅛-inch fall per foot under pressure, and greater than the actual number (1,880), the size required for the primary branch from stack 2 is 8-inch diameter.

Similarly, for stacks 1, 3, and 4, the limits for a 5-inch primary branch at ⅛-inch fall per foot are 400 fixture units for nonpressure drainage (table 807 (*c*)–III) and 800 fixture units for pressure drainage (table 807 (*d*)–III). Again, $1.77\times400=708$ fixture units is greater than the load to be carried (480 fixture units) and less than the limit (800 fixture units) for pressure drainage, and hence a 5-inch primary branch will be required from stacks 1, 3, and 4. Starting with stacks 1 and 3 and applying rule 5 for pressure drainage, page 53, and then rule 8 for nonpressure drainage, page 49, the computation may be summarized as shown in the following table. In this case there will be three different values of P (the permissible number of fixture units on the primary branch) to be used in the equation, $FU=P[1+a(\Sigma L-40)]$; $P_1=708$ fixture units, applying to the secondary branch a for stacks 1 and 3; $P_2=1.77\times660=1{,}168$ fixture units, applying to the secondary branch b for stacks 1, 3, and 4; and $P_3=1.77\times1{,}600=2{,}832$ fixture units, applying to the primary branch from stack 2, to the secondary branch c, and to the main building drain d.

Branch	ΣL	Permissible fixture units $P[1+0.007(\Sigma L-40)]$	Actual fixture units	Diameter required
	Feet			*Inches*
a	86	$708[1+0.007(86-40)]=935$	960	6
b	130	$1{,}168[1+0.007(130-40)]=1{,}904$	1,440	6
c	190	$2{,}832[1+0.007(190-40)]=5{,}805$	3,320	8
d (main)	219	$2{,}832[1+0.007(219-40)]=6{,}380$	3,528	8

Summarizing, the requirements in sizes are as follows:

5-inch for primary branches from stacks 1, 3, and 4;

8-inch for primary branches from stack 2;
6-inch for secondary branches a and b;
8-inch for secondary branch c; and
8-inch for main building drain d.

Since the number of fixture units carried by the main building drain and building sewer ($3{,}320+208=3{,}528$ fixture units) does not exceed either the ultimate limit (5,600) for an 8-inch drain or the computed limit (5,805) for the secondary branch c immediately upstream from the junction point B, the main building drain d and the building sewer may also be 8-inch pipe if they are laid with not less than ⅛-inch fall per foot. It should be noted that the computed limit may sometimes exceed the ultimate permissible limit given by table 807(*d*)–III, part III, as is the case in the computation for branch c. In these cases, the permissible limit in the table shall apply.

Par. 902. Gutters and Leader Connec-

TIONS.—Roof gutters are not ordinarily considered a part of the plumbing work and are usually installed under a separate contract and by different workmen. However, the requirements for and installation of roof gutters are related to the plumbing in that they are the principal collectors of storm water and are directly connected to the leaders of the storm-drainage system of the building. Hence, the capacities of roof gutters and their outlets to leaders should be consistent with the capacities of the leaders. The following information is included here as an aid to the engineer in specifying the proper sizes of roof gutters and outlets.

TABLE 902–III.—*Maximum roof area for semicircular roof gutters with a fall of 1/16 inch per foot or less*

Diameter of gutter	Maximum roof area
Inches	*Square feet*
3	170
4	360
5	625
6	960
7	1,380
8	1,990
10	3,600
12	6,800

The capacities in the preceding table are based on the flow capacities of gutters of semicircular sections, no slope, one outlet, and a rate of rainfall of 4 inches per hour. If the fall is greater than 1/16 inch per foot or if the gutter has two or more outlets (leaders), the permissible roof area as given in table 902–III may be increased by multiplying it by one or both of the following factors as they apply: (a) by $\sqrt{s/(1/16)}$, where s is the actual fall in inches per foot; and (b) by n, the number of outlets, provided the roof area drained into any one leader does not exceed the value given in table 902–III or the permissible roof area as computed by (a). For example, assume that a 3-inch semicircular roof gutter is pitched with a fall of 1/8 inch per foot so as to divide the roof area equally between two leaders. The permissible roof area on the 3-inch gutter becomes

$$170\sqrt{\frac{1/8}{1/16}}\times 2=340\sqrt{2}=479 \text{ sq ft.}$$

For roof gutters with rectangular or other polygon-shaped cross-sections, table 902–III may be used safely, provided the gutter has a depth equal to the radius and an average width equal to the diameter of the semicircular section; or the capacity of a roof gutter of any shape may be safely assumed as equal to that of a semicircular gutter equal in radius to that of the largest semicircle that can be inscribed wholly within the cross-section of the gutter in question.

Roof area for application to requirements for roof gutters will be computed in the same manner as for storm drains. (See sec. 903(*c*), pt. II.)

The capacities of roof gutters as given in table 902–III, part III, assume an outlet of at least equal capacity. Insufficient outlet through the leader connection, improperly formed leader outlet and strainer, and clogged strainer or leader connection are the usual causes of an overflowing roof gutter, except in cases of rainfall in excess of the rates provided for. There are no generally recognized standards governing the forms and sizes of leader connections. The outlet of a roof gutter flowing at capacity should be at least equal in cross-section to the gutter. Likewise, the total intake area of the strainer should be at least equal to the cross-section of the gutter. The required intake area may be obtained by doming the strainer or by increasing the dimensions of the strainer and leader connection.

Par. 903. SIZE OF STORM DRAINS AND LEADERS.—Tables 903(*b*) and 903(*c*), part II, are, as stated, based on a rate of rainfall of 4 inches per hour. Whether it is essential to make allowances for greater rates of rainfall in certain localities will depend on the maximum rates and frequency of rates higher than 4 inches per hour of rainfall recorded for these localities and to some extent on whether any particular damage to health or property would result from overflow. Likewise, whether it is advisable to increase the allowable load on leaders and storm drains of given diameters and slopes will depend on the weather records and on what maximum rate of rainfall is to be expected. In either case, the tables given can be utilized for determining the size of pipe needed by simply multiplying the allowable roof areas as given in the tables by $\frac{4}{x}$, where x is the rate of rainfall to be provided for. For example, if a rate of

only 2 inches per hour is to be provided for, the allowable roof areas may be doubled; and if a rate of 6 inches per hour is to be provided for, the allowable roof area would become 2/3 of the values given in the tables.

Par. 903(*d*). ALLOWANCE FOR PROJECTING WALLS.—In case a wall projects above a roof in such a manner that storm water drains from the wall onto the roof, the following allowances to be added to the roof area are suggested:

(1) For total roof area applied to a leader or storm drain receiving total flow from the roof:

a. For one wall only, add 50 percent of the wall area;

b. For two adjacent walls only, add 35 percent of the sum of the wall areas if both are of the same height. If the two adjacent walls are of different heights, allow 35 percent of the combined wall area below and 50 percent of the wall area above the top of the lower wall;

c. For two opposite walls only, make no allowance if both are of the same height. Add 50 percent of the wall area extending above the lower wall if the two are of different heights;

d. For walls on three sides, add 50 percent of the area of that part of the inner wall that lies below the lowest of the three walls, and allow for the portions of the two walls extending above the lowest, as in b if the walls are adjacent, or as in c if the walls are opposite;

e. For walls on four sides, ignore all wall areas lying below the top of the lowest wall, and add for those extending above it according to whether they fall under a, b, or d.

(2) For application to leaders or storm drains receiving only part of the roof drainage:

a. Determine the portion and dimensions of the roof area drained into each leader connection;

b. Compute allowance for projecting walls separately for each leader connection, as for total allowance to be added, ignoring walls not directly adjoining and extending above the section of the roof drained into the leader for which the computation is being made.

(3) For application to the main building drain and building sewer:

a. Ignore walls not extending above the building;

b. For one wall only extending above the building, ignore the wall area if it is less than that of the roof, or add 50 percent of the difference if it is greater than the roof area;

c. For two adjacent walls only, ignore the combined wall area if less than that of the roof, or add 35 percent of the difference if it is greater than the roof area;

d. For two opposite walls only, ignore wall area if the area of that portion of the higher wall above the top of the lower is less than the roof area, or add 50 percent of the difference if it is greater;

e. For three walls extending above the building, ignore wall area below the top of the lowest wall and then apply c or d above according to whether the walls extending higher are adjacent or opposite.

In all cases, the importance of applying an allowance for walls extending above the building and draining onto its roof depends largely on the relative areas of the extending walls and the roof. If the roof area is large relative to the total area or to that part of the total area for which allowance would be made under the preceding rules, the matter is not likely to be of great importance. It may be very important to make an allowance for wall area if a low building is built at the side of a tall one or into an angle formed by two tall buildings, or if a low-roofed portion of a building has a similar relation to different wings. It will be of less importance in any case if the leaders and storm drains required by the regulations for roof area alone are more than ample than if they are near the limit in capacity.

The allowances given in the preceding rules were selected to provide for a driving rain at an angle of 30° with the vertical. Regardless of the angle at which the rain falls, the portions of projecting roofs ignored under the rules given can be safely ignored in regard to their effects on the building storm sewer.

Par. 904. SEPARATE AND COMBINED DRAINS.—The provisions of section 904(*a*), part II, are intended to require separate sanitary and storm systems until they can be conveniently connected at grade. The sanitary system should be collected into one sanitary drain and the storm system into one storm drain, and the two connected at grade, if it can be conveniently done without crossing over. If the preceding

is not convenient or economical, the sanitary and storm drains on each side of the combined sewer of the building may be joined at grade as described and the two combined drains thus formed connected to the building sewer. Connections should not be made through double-wye branches. If the street sewer is subject to overcharging or submergence, there will be less likelihood of detrimental effects to the sanitary system if the storm drainage and sanitary drainage are carried separately to the street sewer.

TABLE 904–III.—*Required diameters for combined building drains and sewers according to number of fixture units*

FOR DRAINS AND SEWERS HAVING ⅛-INCH FALL PER FOOT

Roof area \ Fixture units	0	225	425	450	675	850	1,350	1,400	2,450	2,800	4,000	4,900	8,000
sq ft	*in.*	*in.*	*in.*	*in.*	*in.*	*in.*	*in.*	*in.*	*in.*	*in.*	*in.*	*in.*	*in.*
0	-------	4	4	4	5	5	6	8	8	8	10	10	12
775	4	4	5	5	6	6	8	8	8	10	10	10	12
1,350	4	5	5	6	6	6	8	8	10	10	10	10	12
1,550	4	5	6	6	6	8	8	8	10	10	10	12	12
2,100	5	6	6	6	6	8	8	8	10	10	10	12	12
2,700	5	6	6	6	8	8	8	8	10	10	12	12	12
4,200	6	8	8	8	8	8	8	8	10	10	12	12	12
4,350	8	8	8	8	8	8	8	8	10	10	12	12	15
7,600	8	8	10	10	10	10	10	10	10	12	12	12	15
8,700	8	8	10	10	10	10	10	10	12	12	12	12	15
12,400	10	10	10	10	10	10	12	12	12	12	12	15	15
15,200	10	12	12	12	12	12	12	12	12	15	15	15	15
24,800	12	12	12	12	12	12	12	12	15	15	15	15	15

FOR DRAINS AND SEWERS HAVING ¼-INCH FALL PER FOOT

Roof area \ Fixture units	0	315	595	630	950	1,190	1,900	1,950	3,400	3,900	5,650	6,800	11,300
sq ft	*in.*	*in.*	*in.*	*in.*	*in.*	*in.*	*in.*	*in.*	*in.*	*in.*	*in.*	*in.*	*in.*
0	-------	4	4	4	5	5	6	8	8	8	10	10	12
1,075	4	4	5	5	6	6	8	8	8	10	10	12	12
1,800	4	5	5	6	6	6	8	8	10	10	10	12	12
2,150	4	5	6	6	6	8	8	8	10	10	10	12	12
3,000	5	6	6	6	6	8	8	8	10	10	10	12	12
3,600	5	6	6	6	8	8	8	8	10	10	12	12	15
5,950	6	6	8	8	8	8	8	8	10	10	12	12	15
6,000	6	8	8	8	8	8	8	10	10	10	12	12	15
9,800	8	8	8	8	10	10	10	10	10	12	12	12	15
11,900	8	10	10	10	10	10	10	10	12	12	12	12	15
15,900	10	10	10	10	10	10	12	12	12	12	12	15	15
19,600	10	10	12	12	12	12	12	12	12	12	15	15	15
31,800	12	12	12	12	12	15	15	15	15	15	15	15	15

FOR DRAINS AND SEWERS HAVING ½-INCH FALL PER FOOT

Roof area \ Fixture units	0	450	850	900	1,350	1,700	2,700	2,800	4,900	5,600	7,500	9,800	15,000
sq ft	*in.*	*in.*	*in.*	*in.*	*in.*	*in.*	*in.*	*in.*	*in.*	*in.*	*in.*	*in.*	*in.*
0	-------	4	4	4	5	5	6	8	8	8	10	10	12
1,550	4	4	5	5	6	6	8	8	8	8	10	10	12
2,700	4	5	5	6	6	8	8	8	10	10	10	10	12
3,100	4	5	6	6	6	8	8	8	10	10	10	12	12
4,200	5	6	6	6	6	8	8	8	10	10	10	12	12
5,400	5	6	6	6	8	8	8	8	10	10	10	12	15
8,400	6	8	8	8	8	8	8	8	10	10	12	12	15
8,700	8	8	8	8	8	8	8	8	10	10	12	12	15
15,200	8	8	10	10	10	10	10	10	10	12	12	12	15
17,400	8	10	10	10	10	10	10	10	12	12	12	15	15
24,700	10	10	10	10	10	10	12	12	12	12	12	15	15
30,400	10	10	10	12	12	12	12	12	12	12	15	15	15
49,400	12	12	12	12	12	15	15	15	15	15	15	15	15

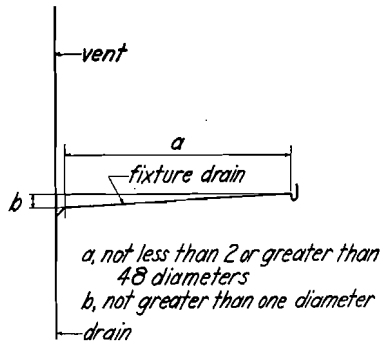

FIGURE 13.—*Distance of trap from vent.*

Par. 1002. PROTECTION OF TRAP SEALS.—The requirements of chapter X, part II, are designed to give the maximum flexibility in the design of a building-drainage and venting system consistent with an adequate protection of the seals of fixture traps. This flexibility is accomplished by a more complete classification of vents as to their functions, locations, and forms, and a more detailed statement of the limits of use of different forms than is to be found in the usual plumbing code.

Par. 1005. DISTANCE OF TRAP FROM VENT.—Section 1005, part II, applies particularly to vents for separate traps, usually termed "back vents." The most effective point for venting a fixture drain depends on the form of the drain. If the fixture drain turns to the vertical within 48 pipe diameters from the trap weir, a vertical continuous-waste-and-vent at that point is the most effective vent that can be installed. If the fixture drain slopes continuously from the trap weir, the requirement, assuming a fall of ¼ inch per foot, limits the permissible length of drain between trap and vent to: 5 feet for a 1¼-inch drain; 6 feet for a 1½-inch drain; 8 feet for a 2-inch drain; and 12 feet for a 3-inch drain. If a fixture drain connects with an adequate relief vent or with a stack-vent within these limits, the relief vent or stack-vent will perform the functions of a back vent. (See fig. 13.)

Par. 1008. YOKE AND RELIEF VENTS.—Section 1008, part II, gives the details and necessary restrictions for group venting the plumbing fixtures, ordinarily installed in residences, by means of a stack-vent, yoke vents, or relief vents. The application of section 1008 in conjunction with sections 1005 to 1007 makes many simplifications in piping possible and offers inviting opportunities for standardization and prefabrication. Figures 16 to 20 illustrate a few simplified lay-outs for residential construction which may be varied to a considerable extent in arrangement of fixtures without conflicting in any respect with the minimum requirements of this manual.

Figure 16 illustrates the simplest lay-out, and in general the most effective venting obtainable, for a single bathroom group and a kitchen sink or combination fixture all in one story or branch interval. The figure illustrates one arrangement of the fixtures about the stack, and illustrates the type of fittings required. The line sketches of figures 17 to 20 merely indicate typical drain lay-outs and venting required under section 1008 for these lay-outs.

The group venting illustrated in figure 16 may be used on a yoke-vented section of a horizontal branch not less than 3 inches in diameter, in any branch interval of a soil stack, and the order of the fixtures around the stack or yoke-vented branch may be varied as necessary

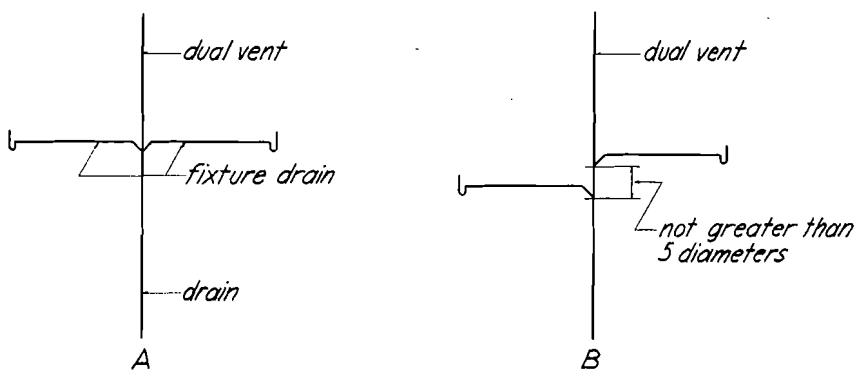

FIGURE 14.—*Dual vents.*

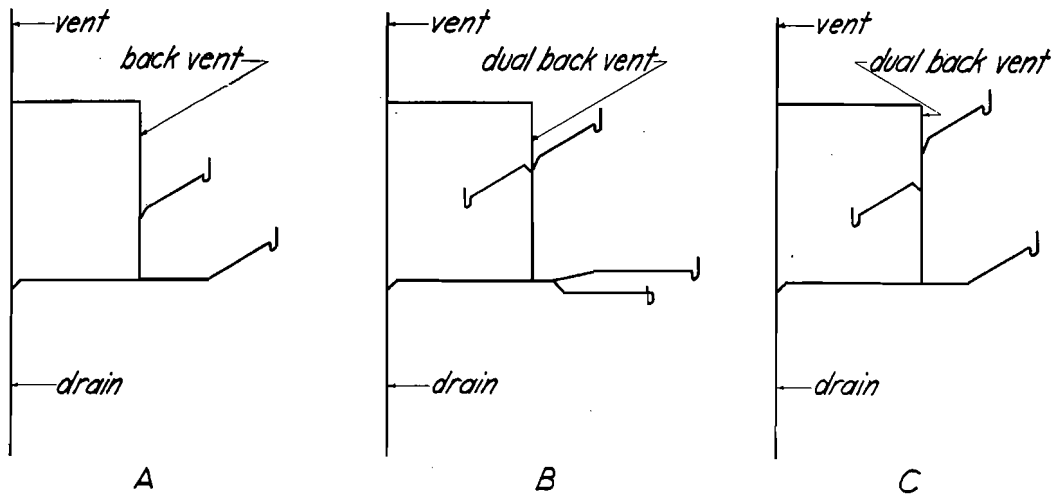

FIGURE 15.—*Group vents for lavatories and bathtubs.*

for accommodation to the floor plans of any particular building.

Figure 17 illustrates essential venting for a two-story lay-out with kitchen sink on the first floor and bathroom group on the second floor.

Figure 18 illustrates two lay-outs for duplex construction as permitted by section 1008(*c*). The lay-out for lavatories and bathtubs illustrated in the lowest branch interval of figure 20 may be used in lieu of that illustrated in figure 18B.

Figure 19 illustrates the permissible lay-out under section 1008(*b*) for two bathroom groups and two kitchen sinks in the two highest stories or branch intervals of a building. Alternate connections for the sinks are shown in dotted lines with the vents required in case the sinks are connected to a separate stack or to the soil stack below the highest water-closet branch.

Figure 20 illustrates permissible lay-outs for duplex construction for any number of floors or branch intervals for fixtures of the same kind located back-to-back. If the fixtures are not located back-to-back, the lay-out represented in figure 18A may be installed in any branch interval with relief vents of the yoke-vent type as shown in figure 20.

Figures 13 to 20 illustrate the main essentials for effective group venting and may be used in any combination so long as these essentials are preserved. Under section 1008(*d*), any number of the fittings and the pipe necessary to make the installations illustrated in figures 13 to 20 or permitted by the requirements of part II may be standardized for particular or typical floor plans and cast in one fitting or otherwise prefabricated.

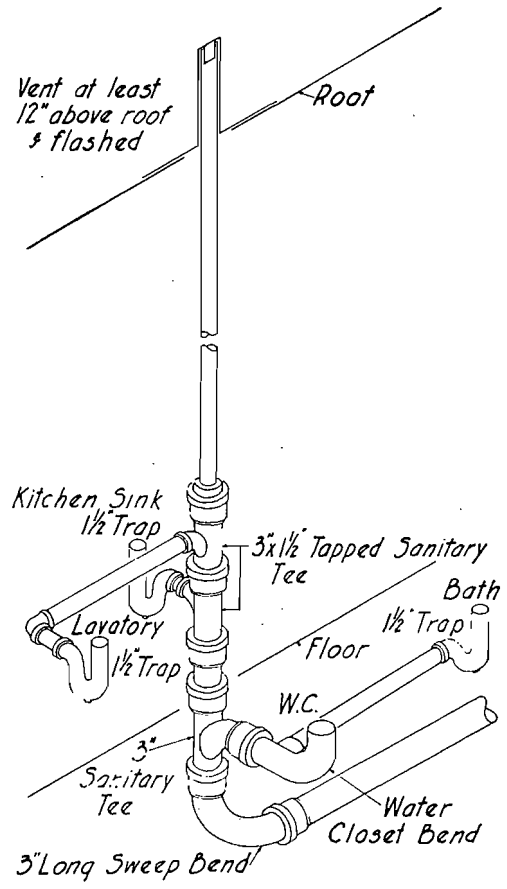

FIGURE 16.—*Stack-vented piping lay-out for one-story house.*

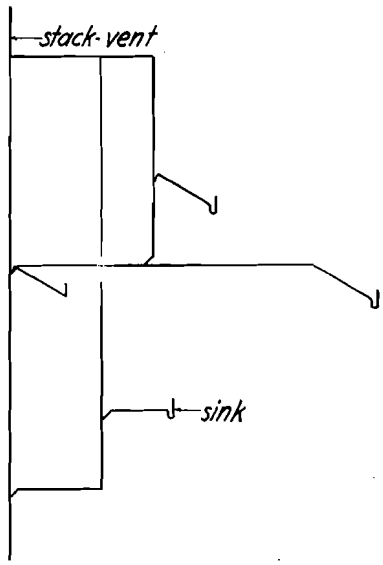

FIGURE 17.—*Piping lay-out for two-story house with one bathroom.*

Par. 1010. VENTS FOR FLAT-BOTTOMED FIXTURES.—Section 1010, part II, is intended to apply particularly to installations for kitchen sinks and to provide for more effective drainage of the fixture and scouring of the fixture drain than can be obtained in some cases by an installation back-vented near the trap.

Clogging of the fixture drains of kitchen sinks by deposits from greasy waste water is a source of annoyance and a cause of frequent servicing. In this connection it should be noted that, in general, the shorter and the more direct the fixture drain is, from the trap to its connection to a stack or to another drain that is thoroughly washed by the discharge from other fixtures, the more effective the drainage will be in respect to both quickness of emptying of the fixture and freedom from clogging. However, the location of the kitchen relative to stacks or drains that are thoroughly washed by other fixtures may make it necessary to install a fixture drain from the sink with a relatively long sloping section. The installation of a back vent on the fixture side of the sloping section of the fixture drain will reduce the effective head on the drain, result in sluggish action, and induce deposition which will usually result in clogging both the fixture drain and back vent. Omission of the vent will ordinarily provide more effective drainage which, in some cases, may be noisier in operation than if the back vent were installed. Section 1010, part II, simply gives the builder a wider latitude in designing for effective and safe operation of sink installations than is given in section 1005, part II. (See fig. 23.)

Par. 1011. VENTS FOR RESEALING TRAPS.—Section 1011, part II, is intended to provide for cases where no space is available for a properly installed vent for a P-trap. A group of lavatories located in the middle of a washroom floor would be an example of such a case.

Par. 1012. FIXTURES AT BASE OF MAIN VENT.—The purpose of the provisions of section 1012, part II, is to permit the installation of a limited number of fixtures at the base of

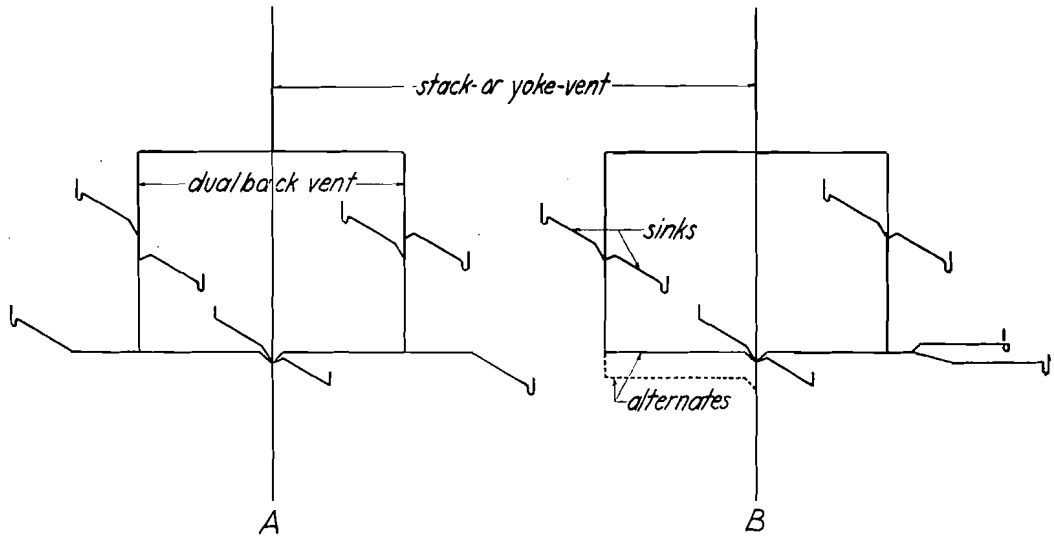

FIGURE 18.—*Piping lay-out for one-story duplex house.*

long vertical vents to wash out rust or other products of corrosion. Fixtures discharging greasy or other waste water likely to congeal and deposit and fixtures in excess of the limits set in section 1012 should not be so connected.

Par. 1101. INDIRECT CONNECTIONS.—Any indirect connection whereby the continuity of the

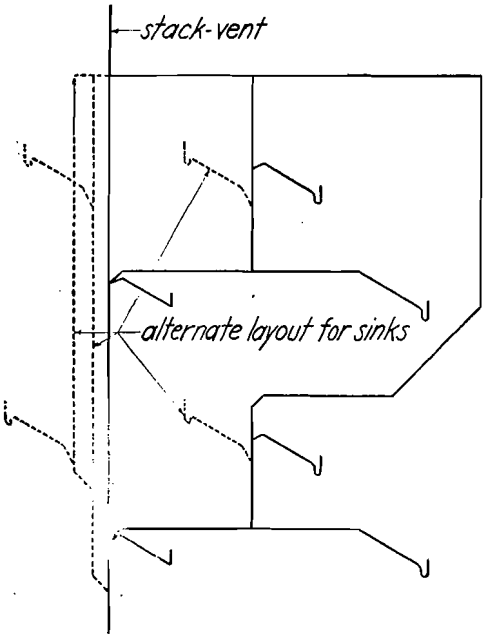

FIGURE 19.—*Piping lay-out for bathrooms in each of two stories.*

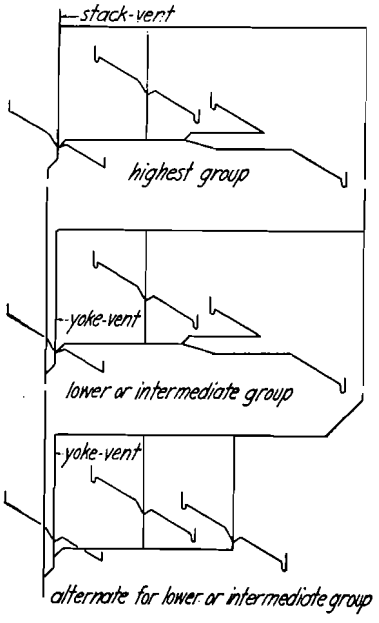

FIGURE 20.—*Piping lay-out for duplex apartments.*

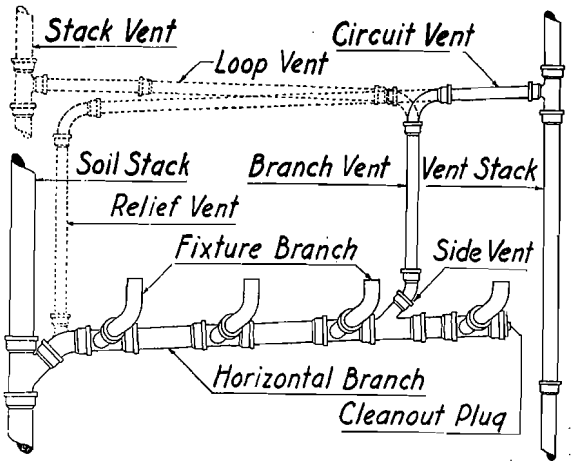

FIGURE 21.—*Illustration of circuit-and-loop vents.*

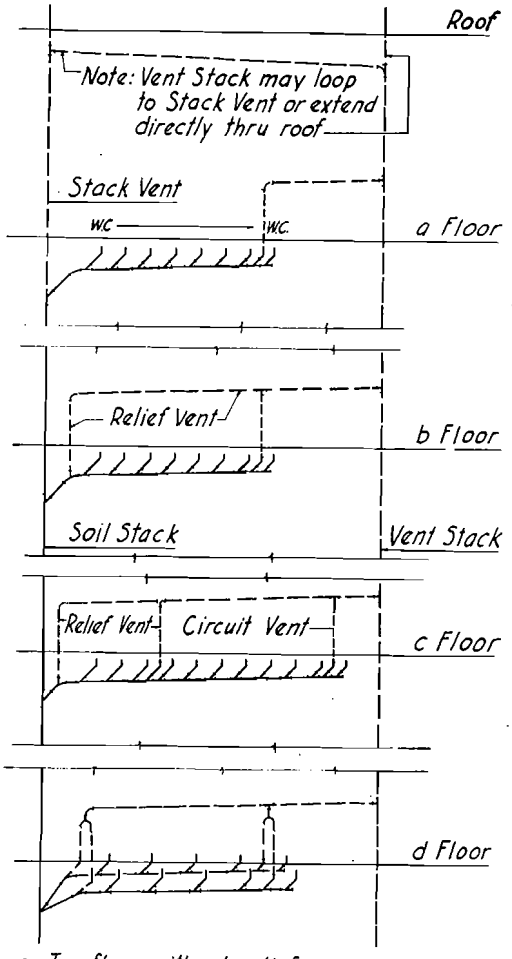

a Top floor without relief
b Intermediate floor with one relief vent
c Intermediate or lower floor with two relief vents
d Intermediate or lower floor for double line of fixtures

FIGURE 22.—*Limits for circuit-and-loop vents.*

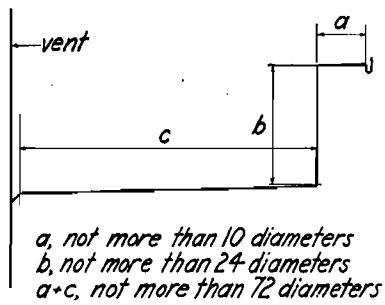

FIGURE 23.—*Drains and vents for flat-bottomed fixtures.*

waste line from an appliance, device, or apparatus having a drip or drainage outlet is broken by an air gap of such spacing as will prevent backflow, is approved if the waste water is not contaminated with human or household wastes and if the waste line discharges on the inlet side of a fixture trap. Such fixture trap may be a part of the plumbing installation of the appliance, device, or apparatus, or it may be the trap of a regular plumbing fixture. In the latter case the air gap should be above the flow line of the fixture.

Appliances, devices, or apparatus where such indirect connections are required are stills, sterilizers, equipment requiring cooling water, and the like. Examples of such indirect connections are shown in figure 24.

Par. 1305(*b*). AIR TESTS.—In applying air tests, it should be noted that a slowly falling pressure is not necessarily an indication of a leaking system. If the air introduced is of a higher temperature than that of the piping system or than that of the air already in the system, the pressure will fall slowly until temperature equilibrium is reached. In such cases, before searching for definite leaks, the pressure should again be brought to the test value without changing the air in the system. If the rate of fall is materially lower on the second or on repeated trials, it may be taken as an indication of a tight system. On the other hand, if the temperature of the air introduced is lower than that of the piping system or the air already in the system, a slowly rising pressure may occur. A rising pressure or constant pressure for a 15-minute period may be taken as a positive indication of tightness. In case of a rapidly falling pressure, a search for leaks should be made before repeating. The same precautions apply to smoke tests.

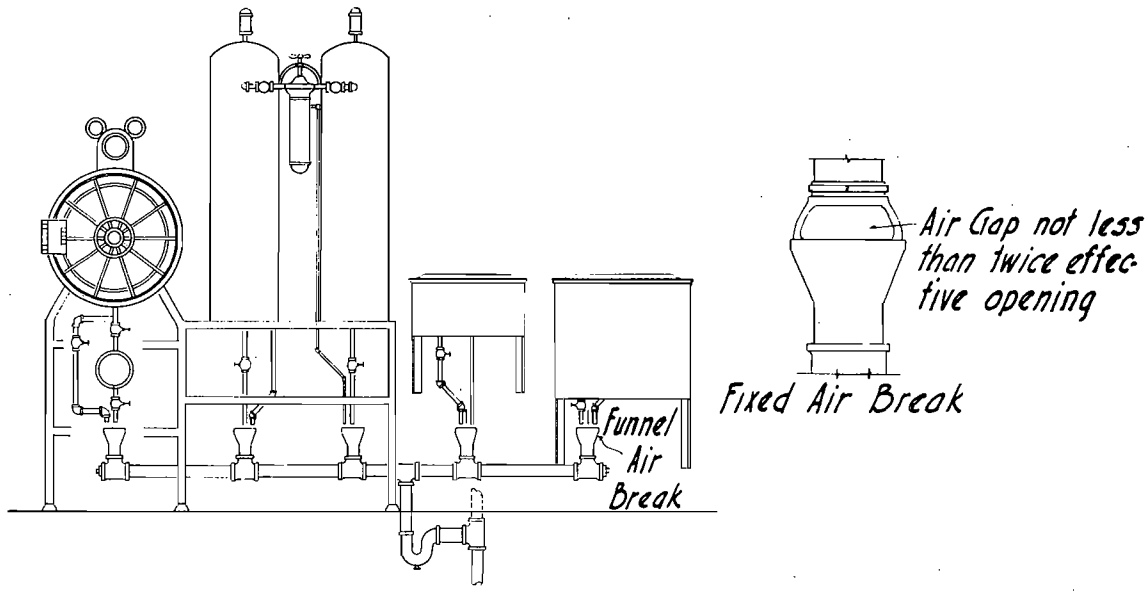

FIGURE 24.—*Indirect wastes.*

INDEX

A

Page

Accepted standards 27
  Definition 6
Accessibility:
  Of fixtures for cleaning 14
  Of indirect-waste connections 22
  Of overflow pipes for cleaning 14
  Of sand interceptors 13
  Of traps and clean-outs 13
Acid wastes 46
Adjacent buildings, relation of vent terminals to 22
Adjustments after test 24
Affidavit for plumber's test 23
Air gap 34, 61
  Definition 6
  Illustration of 34
Air-pressure test:
  Of drainage system 23
  Of sanitary-drainage system 23
  Of vent system 23
  Of water-supply system 23
Air test, final 23
Air tests 62
  Of defective plumbing 24
  Of drainage system 23
  Of leaders 24
  Of roof connections 24
  Pressure in 23, 24
  Time required for 23, 24
Alterations, considered as new work 24
Alternate materials 11
American Society for Testing Materials 29
American Standards Association 29
Ample flow, definition 35
Apartment houses, water-demand estimates for small 44
Application of flow charts 40
Approval:
  Before covering work 24
  Certificate of 24
  Of alternate materials 11
  Of plans for building drain 16
  Of plans for building sewer 16
  Of plans for drainage system 16
  Written, of tests 24
Approved, definition 6
Aquaria 14
Area drain:
  Definition 6
  Trap, need not be vented 22

B

Back siphonage, definition. *See* Backflow.
Back vent 58
  Definition 6
  Distance from trap weir 22
  For flat-bottomed fixtures 20
  Location of 18
  On fixture drain of kitchen sink 60
  Prohibited 22
  Size of 21
Backflow:
  Definition 6
  Protection against 13, 14, 34
Backflow connection:
  Definition 6
  Prohibited 9
Backflow preventers 34
Back-pressure valve for subsoil drain 18
Backwater, protection of subsoil drain against 18
Backwater traps, need not be vented 22
Backwater valves 13
Baptistries 14
Bar sinks, small, size of trap and drain for 12
Barns used for human habitation 24
Basement drain trap, need not be vented 22
Bath fillers, air gaps for 34
Bathroom group:
  Private, fixture-unit value of 15, 40
  Venting of 19
Bathrooms, water-demand estimates for 44
Bathtub:
  Group vents for 59
  Private, fixture-unit value of 15, 40
  Public, fixture-unit value of 15, 40
  Size of supply outlets for 14
  Size of trap and drain for 12
  Trap, venting of 19

Page

Battery:
  Circuit and loop venting of 20
  Double, circuit and loop venting of 20
Blow-offs, connections of 22
Boiler blow-offs, connections of 22
Branch:
  Definition 6
  Fixture, definition 7
  Sanitary, of combined drain, size of 17
  Storm, of combined drain, size of 17
  To heater, required sizes of 45
  Yoke-vented, independent connections with 19
  See also Fixture branch; Horizontal branch; Hot-water branch; Primary branches; Secondary branches.
Branch interval, definition 6
Branch vent, definition 6
Brass:
  Calking ferrules 11, 31
  Fittings 11, 31
  Pipe 10, 30
  Sheet 11, 31
  Tubing 10, 30
Building drain:
  Capacity of 16, 57
  Capacity of branches 16
  Computing capacity of 49, 52, 54
  Definition 6
  Material of underground 14
  Nonpressure drainage, fixture-unit value of 49
  Pressure drainage, fixture-unit value of 52
  Separate tests of 24
  Size of 16, 54
  Size of, for given roof area 57
  Submittal of plans for 16
Building-drainage system, definition 6
Building line, relation of vent terminals to 22
Building main:
  Definition 6
  Fixture units and estimated demands on 44
  For small buildings 43
  Required sizes of 45
  Size of 13, 35, 44
  Supply required for 44
  Velocity of supply of 44
Building sewer:
  Capacity of 16
  Definition 6
  Fixture-unit capacity of 57
  Material of 14
  Separate tests of 24
  Size of 16, 54
  Size of, for given roof area 57
  Submittal of plans for 16
Building subdrain:
  Definition 6
  Discharge of 16
Building water main, estimating for continuous demands on 42
Bureau of Standards, National 29, 45
Busbings, soldering 11

C

Calked joints 11
Calking:
  Ferrules 11, 31
  Lead 10, 31
  Not acceptable in repairs 24
  Of vent terminals 22
Cast iron:
  And other piping, joints between 11
  Fittings 11, 31
  Pipe joints 11
  Screwed pipe 10, 30
  Soil pipe 10, 29
  Water pipe 10, 29
Catchbasin trap, subsoil, need not be vented 22
Cellar-floor drain trap, need not be vented 22
Cement joints in vitrified-clay pipe 32
Cemented joints 11
Certificate of approval 24
Cesspool, leaching, definition 27
Cesspools 27
Changes in direction 9
Changes in size of pipe 12, 32
Chemical mixtures, use of, prohibited in tests 24
Chemical wastes 46
Circuit-and-loop venting, limits of 20, 61
Circuit-and-loop vents, illustration of 61

	Page
Circuit vent	20
Definition	6
Size of	21
Cisterns:	
Overflow pipes from	18
Protection from freezing	13
Clay pipe:	
Joints	11, 31
Vitrified	10, 29
Clean-out equivalents	13
Clean-outs:	
Accessibility	13
For refrigerator wastes	22
Pipe	13
Pipe, location of	13
Pipe, size of	13
Trap	13
Traps and	12
Clogging of sink drains	60
Closed system required	18
Closets, frostproof	14
Closing of openings in tests	23, 24
Combination fixture:	
Definition	6
Size of trap and drain for	12
Combination kitchen sink and tray, venting of	19
Combination sink and laundry tray, private, fixture-unit value of	15
Combined drains	17, 56
Size of	17, 57
Combined drainage system, connection of subsoil drain to	18
Combined fittings	20
Combined sewer	57
Size of	17, 57
Combined sewerage system to be closed	18
Combined tests	24
Commercial Standards	29, 45
Compliance, inspection to assure	23
Compound, setting	11
Concrete pipe	10, 29
Joints	11, 31
Condensate connections	22
Conductors. *See* Leaders.	
Connection:	
Of horizontal branch to soil stack	19
Of horizontal branch to water-closet drain	19
Of relief vent to main vent	21
Of relief vent to stack-vent	21
Of sanitary and storm drains	17
Of stack-vent and vent stack	18
Connections:	
Backflow, definition	6
Backflow, prohibited	9
Blow-off	22
Condensate	22
Floor	12
Independent. *See* Independent connections.	
Indirect. *See* Indirect connections.	
Indirect waste, accessibility of	22
Indirect waste, location of	22
Joints and	11
Overflow pipe	18
Prohibited	14
Roof, tests of	24
Tightness of	11
Construction, inspection of	23
Construction workers, toilet facilities for	22
Continuous waste	33
Definition	7
Continuous-waste-and-vent	19
Definition	6
Location of	18
Relief vent, for flat-bottomed fixtures	20
Cooling of waste water, methods for	22
Copper:	
Pipe	10, 30
Sheet	11, 31
Tubing	10, 30
Tubing, actual and nominal diameters of	41
Tubing, joints	12, 32
Corrosion:	
Effect of, on pipe capacity	42
Protection against	10
Courts, drainage of	16
Covering of work	24
Tests before	24
Cross-connection, definition. *See* Interconnection.	
Cross-connections:	
Prevention of	46
Prohibited	9
D	
Defective material	24
Defective plumbing	22
Alterations of, considered new work	24
Test of	24
Defective work	24
Definitions	6, 27
Illustration of	26
See also index entry for specific terms defined.	
Developed length, definition	7
Diameter, definition	7
Direction, changes in	9
Dishwasher sinks, size of trap and drain for	12
Distance:	
Definition	7
Of trap from vent	18, 58
Of vent terminals from building openings	22
Distribution, water supply and	13
Domestic water heaters, size of supply outlets for	14
Doors, relation of vent terminals to	22
Double battery, circuit and loop venting of	20
Double offset	15
Definition	7
Downspouts. *See* Leaders.	
Downward opening of vent terminals	22
Drain. *See* Drainage; Drains.	
Drain pipe:	
Definition. *See* Drains.	
Estimating size of	15
Drain traps not requiring vents	22
Drainage:	
Of courts	16
Of paved areas	16
Of roofs	16
Of yards	16
See also Pressure drainage.	
Drainage fittings	11
Drainage pipes, separate tests of	24
Drainage piping:	
Changes in direction of	9
Definition	7
Drainage system:	
Air-pressure tests of	23
Combined, connection of subsoil drain to	18
Material of pipes for	14
Submittal of plans for	16
Tests of	23
Water test of	23
Drained area, defined	17
Drains:	
Area. *See* Area drain.	
Building. *See* Building drain.	
Combined. *See* Combined drains.	
Definition	7
Fixture. *See* Fixture drain.	
Floor. *See* Floor drains.	
For flat-bottomed fixtures	62
House. *See* Building drain.	
Requirements for sizes of	47
Sanitary, to be separate	17
Separate	17, 56
Separate and combined	17
Shower	14
Stable, inspection of	24
Storm. *See* Storm drain.	
Subsoil. *See* Subsoil drain.	
Water closet. *See* Water closet.	
Water-closet branch, relief vent from	19
Yard, separate tests of	24
Drinking fountains:	
Air gaps for nozzles of	34
Size of trap and drain for	12
Drip pans, overflow pipes from	18
Drip pipes, indirect connections for	22
Dry vent, definition	7
Dual relief vents	20
Dual vents	19, 58
Definition	7
Permitted	19
Duplex apartment, plumbing lay-out for	61
Duplex house, plumbing lay-out for	60
E	
Effective opening, definition	7
Electrical machinery, protection of	10
Equipment:	
Adjustment after test	24
For tests	23
Estimating for continuous demands on the building water main	42
Estimating supply demands	35
Exhaust pipes:	
From water lift, discharge of	22
To discharge into open fixtures	22
To discharge outside the building	22
Exhibition plumbing need not be inspected or tested	24
Expansion joints	12
Expansion tanks, overflow pipes from	18
F	
Faucets:	
Air gaps for	34
Replaced, inspections or tests not needed	24
Federal specifications	10, 27, 29
Federal Specifications Executive Committee	29
Federal Standard Stock Catalog	29
Ferrules	13
Calking	11, 31
Final condition	24
Final test	23
Approval certificate	24
Of whole system	24

Page

Fittings:
- Allowance for friction loss in 41
- Brass 11, 31
- Cast-iron 11, 31
- Combined 20
- Drainage 11
- Malleable-iron 11, 31
- Prohibited 9
- Reuse of, prohibited 14
- Screwed 11, 31
- Soldered 11, 31, 32

Fixture, combination, definition 6
Fixture branch:
- Definition 7
- Size of 14

Fixture drain:
- Definition 7
- Number between relief vents 20
- Of kitchen sinks 60
- Size of 12

Fixture overflow 14
Fixture strainers 14, 45
Fixture units 15
- Definition 7
- Number on soil or waste stack 21
- Permissible number on branches 16
- Permissible number on horizontal branches or stacks 15

Fixture-unit ratings:
- Of building drains and sewers 57
- Of fixtures 15, 35, 47
- Of small buildings 44

Fixtures:
- At base of main vent 20, 60
- Installation of 14
- Number on horizontal branch 20
- Plumbing, definition 8
- Quality of 14, 45
- Replaced, inspections or tests not needed 24
- Requirements for 14
- With integral traps, size of drains for 12

Flanges, floor 11, 31
Flashing of vent terminals 22
Flashings, roof 12
Flat-bottomed fixtures:
- Drains for 62
- Vents for 20, 60, 62

Flood level:
- Definition 7
- Of highest fixture, distance of vent connection above 18

Floor connections 12
Floor drains 13, 14
- Size of trap and drain for 12

Floor flanges 11, 31
Flow, relation of, to pipe diameter 40
Flow charts 36–39
- Application of 40

Flush valves:
- Fixture-unit value of 40
- Size of supply outlets for 14

Food receptacles, waste pipes from 22
Freezing, protection from 10, 13, 14
Friction loss in valves and fittings, allowance for 41
Frost closure of vents 22
Frostproof closets 14

G

Garages:
- Inspection of 24
- Tests of 24

Garden-hose connections, water-demand estimates for 44
Gaskets 11, 31
General regulations 9
Grade, definition 7
Gravity flow. *See* Nonpressure drainage.
Grease interceptors 13
- Omission of 28

Ground-water supply 33
Group venting 19, 58
Group vents 19
- Definition 7
- For lavatories and bathtubs 59
- Permitted 19
- *See also* Circuit vent; Dual vents.

Gutters:
- Capacity of 54
- Material of 17
- Outlets of 55

H

Horizontal branch:
- Capacity of 15, 16
- Circuit and loop venting of 20
- Connected to soil stack 19
- Connected to water-closet drain 19
- Definition 7
- Fixture-unit value of 48, 49
- Size of 16
- Size of, for circuit and loop venting 20

Page

Hose connections, water-demand estimates for 44
Hotel sinks, size of trap and drain for 12
Hot-poured joints 11, 31
Hot-water branch:
- Fixture units and estimated demands on 44
- Size of 44
- Supply, required for 44
- Velocity of supply of 44

Hot-water system, relief valves on 14
House drain. *See* Building drain.
House sewer. *See* Building sewer.
House subdrain. *See* Building subdrain.
Housing, low-cost, plumbing for 58
Hub-and-spigot joints 11

I

Ice box waste pipes 22
Identification of materials 10
Illustration of application of rules for pressure drainage 53
Illustration of application of table 805(b)-III 48
Increasers 12, 32
Independent connections:
- To soil stack 19
- With water-closet drains 19
- With yoke-vented branch 19

Indirect connections 61
- For boiler blow-offs 22
- For drip pipes 22
- For overflow pipes 18
- For steam exhaust 22
- To waste pipes 22

Indirect waste pipe, definition 7
Indirect wastes 22, 62
- To discharge into open fixtures 22

Indirect waste connections:
- Accessibility of 22
- Location of 22

Industrial sewage, definition 27
Insanitary conditions 22
Inspection 23
- And tests 23
- Before covering work 24
- Not required 24
- Of garages 24
- Of stable-yard drains 24
- Of stables 24

Installation:
- Inspection of 23
- Of fixtures 14
- Of piping 28

Interceptor:
- Grease 13
- Grease, omission of 28
- Not prohibited 32
- Oil 13
- Sand 13
- Sand, definition 8

Interconnection:
- Definition 7
- Prohibited 9

Interval, branch, definition 6
Iron, sheet 11, 31
Iron-body ferrules 11, 31

J

Jointing compounds for vitrified-clay pipe 31
Joints:
- And connections 11
- Calked 11
- Cast-iron and other piping 11
- Cast-iron pipe 11
- Cemented 11
- Clay pipe 11, 31
- Concrete pipe 11, 31
- Copper-tubing 11, 32
- Expansion 12
- Hot-poured 11, 31
- Hub-and-spigot 11
- Lead and other piping 12
- Round 12
- Screwed 11
- Slip 12
- Tightness of 11
- Vitrified-clay pipe 11, 31
- Watertight, on combined sewerage system 18
- Wiped 12

Jumpover. *See* Return offsets.

K

Kitchen sinks:
- Fixture drains of 60
- Private, fixture-unit value of 15, 40
- Public, fixture-unit value of 40
- Size of trap and drain for 12
- Venting of 19
- Water-demand estimates for 44

Kitchen-sink trap, venting of 19

Page

L

Labor for inspection and test 23
Laundry trays:
Fixture-unit value of 40
Private, fixture-unit value of 15
Size of supply outlets for 14
Size of trap and drain for 12
Water-demand estimates for 44
Lavatories:
Fixture-unit value of 40, 44
Group vents for 59
Private, fixture-unit value of 15, 40
Public, fixture-unit value of 15, 40
Size of supply outlets for 14
Size of trap and drain for 12
Venting of trap of 19
Water-demand estimates for 44
Lavatory supplies, air gaps for 34
Lawn sprinkling, water demands for 45
Lay-outs for residential plumbing 59-61
Lead:
And other piping, joints between 12
Calking 10, 31
Pipe 10, 30
Pipe, distance from floor 14
Piping in water-supply lines 14
Salts, poisonous 14
Sheet 10, 31
Trap, distance from floor 14
Lead Industries Association 31
Leaders:
Connections of gutters to 55
Definition 7
Inside, material of 17
Inside, separate tests of 24
Material of 17
Outside, material of 17
Outside, protection of 17
Size of 17, 55
Size of, for given roof area 17
Test of 24
Traps, need not be vented 22
Leaks, no inspections and tests after repair of 24
Length, developed, definition 7
Loads, design 48
Loop vent 20
Definition 7
Size of 21
Loop venting, limits of 20
Low-cost housing, plumbing for 58

M

Machinery, electrical, protection of 10
Main:
Definition 7
Water, definition 9
See also Building main; Water main.
Main vent:
Connection of relief vent to 21
Definition. *See* Vent stack.
Fixtures at base of 20, 60
Required 18
Size and length of 21
Maintenance 22
Malleable-iron fittings 11, 31
Manholes for underground traps and clean-outs 13
Material:
Of building sewer 14
Of leaders and gutters 17
Of soil and waste pipes 14
Of underground building drain 14
Of vents 18
Of water pipes 14
Materials:
Alternate 11
Defective 24
For test of system 23
Identification of 10
New, for repairs 24
Quality of 10, 29
Quality, weight, and thickness of 10
Specifications for 10
Standards for 10
Metals. *See* name of specific material.

N

National Bureau of Standards 29, 45
New materials for repairs 24
Nipples, soldering 11, 31
Noises, reduction of 43
Nonpressure drainage:
Building drain capacities in 49
Definition 8
Notice:
Of defective plumbing 22
Of insanitary plumbing 22
Notification for test 23

O

Obstruction to drain flow 9
Office building, water-demand estimates for 44
Offsets 15
Above highest horizontal branch 15
Below lowest horizontal branch 15
Definition 8
Double 15
Double, definition 7
Relief vents for 21
Return 15
Return, definition 8
Size of 15
Oil interceptors 13
Open fixtures:
Exhaust pipes to discharge into 22
Overflow pipes to discharge into 22
To receive indirect wastes 22
Opening, effective, definition 7
Openings, closing of, in tests 23, 24
Outbuildings used for human habitation 24
Overflow, fixture 14
Overflow pipes 14
Connections of 18
From water-supply tank, discharge of 22
To discharge into open fixtures 22
To discharge outside the building 22
Overrim water supplies, air gaps for 34
Owner:
To be notified regarding test 23
To receive final approval certificate 24

P

Packing 11, 31
Pantry sinks, size of trap and drain for 12
Paved areas, drainage of 16
Pedestal urinals. *See* Urinals.
Percolation test of soil 28
Permit, inspection to assure conformance to 23
Pipe:
Actual and nominal diameters of 41
Brass 10, 30
Drain, estimating size of 15
Drainage, separate tests of 24
Drip, indirect connections for 22
Effect of corrosion on capacity of 42
Flow charts for 36-39, 40
Ice box waste 22
Indirect-waste, definition 7
Protection of 10, 13, 14
Reuse prohibited 14
Sanitary system, material of 14
Sewer, concrete 29
Size of, changes in 12, 32
Size of, definition 8
Soil and waste, for sanitary systems 14
Specifications 10
Vent, separate tests of 24
Water-distributing, for small buildings 43
Water-supply, determining sizes of 42
Wrought-iron 10, 30
See also Cast-iron; Clay pipe; Concrete pipe; Exhaust pipes; Lead; Overflow pipes; Piping; Soil pipe; Tubing; Waste pipes; Water pipe; Water-service pipe.
Pipe clean-outs 13
Location 13
Pipe size:
Changes in 12, 32
Definition 8
Economical 47
Examples in estimating 44
Flow charts on 36-39, 40
Reduction of 12
Piping:
Installation of 9
Repairs to 24
Plans:
For building drain, submittal of 16
For building sewer, submittal of 16
For drainage system, submittal of 16
Inspection to assure conformance to 23
Plumber:
To deliver final approval certificate to owner 24
To furnish necessities for inspection and for test 23
To make notification for test 23
To make tests 23
Plumbing:
Definition 8
Fixtures, definition 8
Fixtures, requirements for 14
System, definition 8
Ponds 14
Pools:
Definition 8
Swimming 14, 46
Power for test of system 23

Page

Prefabricated plumbing 58
Pressure:
In air tests 23, 24
In smoke tests 24
In water tests 23, 24
Pressure drainage 16
Definition 8
Illustration of application of rules for 53
Primary branches:
Capacity of 16
Connection of vent stack to 18
Definition 8
Fixture-unit rating of 48, 49, 52
Size of 16, 54
Private sources of water supply 13
Prohibited:
Connections 9, 14
Fittings 9
Fixtures 60
Interconnections 9
Traps 12, 32
Vents 22
Prohibition of:
Greasy wastes 20
Reuse of pipes or fittings 14
Use of chemical mixtures in tests 24
Projecting walls, allowance for, in roof drainage 56
Protection:
From backflow 13, 34
From corrosion 10
From freezing 10, 13, 14
From frost closure 22
Of electrical machinery 10
Of outside leaders 17
Of pipes 10
Of reservoirs 10
Of subsoil drain against backwater 18
Of trap seals 18
Of water supply 13, 28, 46
Of water tanks 10
Public gutters, storm drainage into 16
Public sinks, size of trap and drain for 12
Purity of water 13

Q

Quality:
Of fixtures 14, 45
Of materials 10, 29
Of water 13, 33
Quantity of water 14

R

Rainfall, size of storm drains based on rate of 17, 55
Receiving tanks 16, 18
Reducers 12, 32
Reduction of pipe size 12
Refrigerator waste pipes 22
Refrigerator wastes:
Clean-out for 22
Size of 22
Traps for 22
Regulations, general 9
Reinspection 24
Relief valves, location of 14
Relief vents 19, 58
Connected to main vent 21
Connected to stack vent 21
Definition 8
For flat-bottomed fixtures 20
For offsets 15, 21
From water-closet branch drain 19
Location of 18
On horizontal branch 20
Size of 20, 21
Renotification for test 23
Renovation of plumbing system 22
Repairs:
Calking not acceptable 24
To piping 24
To plumbing system 22
Replacement 22
Inspections or tests not needed 24
Of defective material 24
Of defective work 24
Resealing traps, vents for 20
Reservoirs, protection of 10
Residential plumbing lay-outs 58, 59-61
Responsibility for meeting tests 23
Retesting 24
Of drainage-system sections 23
Return offsets 15
Definition 8
Reuse of pipes or fittings prohibited 14
Riser:
Definition 8
Size of 45
Roof, relation of vent terminals to 22

Page

Roof area:
Defined 17
For semicircular gutters 55
Sizes of building drains and sewers for given 57
Sizes of leaders for 17
Sizes of storm sewers and drains for 17
Roof connections, tests of 24
Roof drainage 16, 55, 56
Roof flashings 12
Roof gutters, material of 17
Room ventilation 14
Round joints 12
Rules for determining sizes of water-supply pipes 42
Rules for applying section 807(c), part II, and table 807(c)-III, part III 49
Rules for applying section 807 (d), part II, and table 807 (d), part III 53

S

Sand interceptors 13
Definition 8
Sand trap. *See* Sand interceptors.
Sanitary branch of combined drain, size of 17
Sanitary drain to be separate 17
Sanitary sewage, definition 27
Sanitary sewer 14
Definition 8
System, connection of subsoil drain to 18
Sanitary system pipes, material of 14
Sanitary-drainage system: air-pressure test of 23
Smoke test of 23
Screening of vent terminals 22
Screwed fittings 11, 31
Screwed joints 11
Screwed pipe, cast-iron 10, 30
Sealing of vent terminals 22
Seals, trap. *See* Trap seals.
Secondary branches:
Capacity of 16
Computing capacity of 49, 52, 54
Definition 8
Fixture-unit rating of 49, 52
Size of 54
Sections of drainage system, tests of 23
Septic tanks 28
Defined 28
Service sinks:
Fixture-unit value of 40, 44
Public, fixture-unit value of 15
Size of trap and drain for 12
Water-demand estimates for 44
Setting compound 11, 31
Sewage, definition 27
Sewage ejector, fixture-unit value of 15
Sewage purification 27
Sewage treatment:
Defined 27
Plant 27
Plant, definition 8
Plant, design of 27
Sewer:
Building, definition 6
Combined, size of 17
Combined sanitary-and-storm street 17
House. *See* Building sewer.
Sanitary 14
Sanitary, definition 8
Storm, definition 8
Storm, sizes of, for roof areas 17
Types of 27
Sewer pipe, concrete 29
Sewer system, sanitary, connection of subsoil drain to 18
Sewerage system, combined, to be closed 18
Sheet:
Copper and brass 11, 31
Iron and steel, zinc-coated 11, 31
Lead 10, 31
Shower drains 14
Shower head:
Fixture-unit value of 40, 44
Private, fixture-unit value of 15
Public, fixture-unit value of 15
Water-demand estimates for 44
Shower stall:
Size of trap and drain for 12
Trap, venting of 19
Shut-offs, location of 14
Side vent:
As relief vent 21
Definition 8
Sill cocks:
Size of supply outlets for 14
Water-demand estimates for 44
Simplified Practice Recommendations 29, 45

	Page
Sink trap, venting of	19
Sinks:	
Size of supply outlets for	14
Size of trap and drain for	12
See also Kitchen sinks; Service sinks.	
Size of pipe and tubing, definition	8
Slip joints	12
Small buildings, water-demand estimates for	44
Smoke test	62
Final	23
Of defective plumbing	24
Of sanitary-drainage system	23
Of vent system	23
Pressure in	24
Soil, percolation test of	28
Soil and waste pipes for sanitary systems	14
Soil pipe:	
Cast-iron	10, 29
Definition	8
Estimating size of	15
Material of	14
Minimum sizes of	14, 46
Separate tests of	24
Sizes of	15, 47
Soil stack:	
Capacity of	15
Connection of horizontal branch to	19
Connection of vent stack to	18
Fixture-unit rating of	47
Independent connections to	19
Minimum size of	15
Number of fixture units on	21
Number of offsets on	15
Size of, as related to main vent	21
To be vertical	15
Venting of	15, 18
Soldered fittings	11, 31, 32
Soldering bushings	11
Soldering nipples	11, 31
Specifications:	
Federal	10, 27, 29
Material	10
Pipe	10
Stables:	
Inspection of	24
Need not be tested	24
Tests of	24
Used for human habitation	24
Stacks:	
Definition	8
Multiple, capacity of	16
Size of, above offset	15
Size of, below offset	15
To be vertical	15
Venting of	15
Stack-vent:	
Connection of relief vent to	21
Connection to vent stack	18
Definition	8
In dual capacity	19
Required	18
Size and length of	21
Stall urinals. *See* Urinals.	
Standards:	
Accepted	27
Accepted, definition	6
For materials	10
Steam exhausts, indirect connections for	22
Steel:	
Pipe	10, 30
Zinc-coated sheet	11, 31
Sterilizers:	
Indirect connections for	62
Waste pipes from	22
Stills, indirect connections for	62
Stoppages, no inspections and tests after removal of	24
Storage tanks, protection from freezing	13
Storm branch of combined drain, size of	17
Storm drain	16
Definition	8
Size of	17, 55
Sizes of, for roof areas	17
Traps	16
Storm drainage to discharge into public gutters	16
Storm sewage:	
Definition	27
Estimated rate of flow	17
Storm sewer:	
Definition	8
Sizes of, for roof areas	17
Storm-drainage piping system, closed	18
Strainers:	
Fixture	14, 45
Gutter, area of	55
Structural members not to be weakened	9
Subdrain, building or house. *See* Building subdrain.	
Subsoil catchbasin trap need not be vented	22
Subsoil drain	18
Definition	8
Material of	18
To be trapped	18
Substitute tests	23
Sump pump, fixture-unit value of	15
Sumps	16, 18
Supply outlets, size of	14
Supply tanks, overflow pipes from	18
Supports	9, 12
Surface water, protection of water supply against	13
Swimming pools	14, 46
Symbols, plumbing	25
System, plumbing, definition	8
T	
Tanks:	
Expansion, overflow pipes from	18
Receiving	16, 18
Storage, protection from freezing	13
Supply, overflow pipes from	18
Water, protection of	10
Water-closet, size of supply outlets for	14
Water-supply, discharge of overflow pipe from	22
Water-supply, protection of	13
Temperature of water entering building-drainage system	22
Temporary toilet facilities	22
Test, final	23
Approval certificate of	24
Of whole system	24
Tests:	
Adjustments following	24
Air. *See* Air tests.	
Air-pressure. *See* Air-pressure test.	
Before covering work	24
Change in order of	23
Closing of openings in	23, 24
Combined	24
Equipment, material, power, and labor for	23
Inspections and	23
Made by plumber	23
Modification of	23
Not required	24
Not required for stables	24
Notification for	23
Of building drain	24
Of building sewer	24
Of defective plumbing	24
Of drainage pipes	24
Of drainage system	23
Of drainage system sections	23
Of garages	24
Of inside leaders	24
Of leaders	24
Of outbuildings	24
Of roof connections	24
Of soil pipes	24
Of stables	24
Of vent pipes	24
Of waste pipes	24
Of water-supply system	24
Of yard drains	24
Required	23
Separate. *See* Tests, separate.	
Smoke. *See* Smoke test.	
Substitute	23
Use of chemicals in, prohibited	24
Water. *See* Water tests.	
Written approval of	24
Tests, separate	24
Of building drain	24
Of building sewer	24
Of drainage pipes	24
Of inside leaders	24
Of soil pipes	24
Of vent pipes	24
Of waste pipes	24
Of yard drains	24
Permitted	24
Tightness:	
Of joints and connections	11
Tests for	23
Time required:	
For air tests	23, 24
For water tests	23, 24
Toilet facilities, temporary	22
Toilet-room ventilation	14
Trap clean-outs	13
Trap seals	12
Definition	9
Depth of	33
Protection of	18, 58
Trap weir, distance of back vent from	22
Traps:	
Accessibility	13
And clean-outs	12
Definition	9

Page

Traps—Continued.
- Distance of, from vent ... 18, 58
- For more than one fixture ... 12
- For refrigerator wastes ... 22
- For storm drains ... 16
- For subsoil drains ... 18
- Installation ... 13
- Location of ... 12, 18
- Not requiring vents ... 22
- Prohibited ... 12, 32
- Quality and workmanship ... 32
- Required for subsoil sumps ... 18
- To be self-cleaning ... 12, 32
- Types and sizes of ... 12, 32
- Venting of ... 19
- Vents for resealing ... 20, 60
- *See also* Interceptor.

Trap-standard fixtures, number permissible on horizontal branches ... 20
Treatment plant, sewage, definition ... 8
Trough urinals, size of trap and drain for ... 12
Tubing:
- Brass ... 10, 30
- Copper ... 10, 30
- Copper, actual and nominal diameters of ... 41
- Copper, joints ... 12
- Material of ... 14
- Size of, definition ... 8

U

Uncovering of work not inspected, tested, and approved ... 24
Underground traps and clean-outs, accessibility of ... 13
Unions ... 12
Unit vent. *See* Dual vents.
Urinal flush valves:
- Fixture-unit value of ... 40
- Size of supply outlets for ... 14

Urinals:
- Fixture-unit value of ... 44
- Flush valve, fixture-unit rating of ... 40
- Pedestal, fixture-unit value of ... 40
- Pedestal, number permissible on horizontal branches ... 20
- Pedestal, public, fixture-unit value of ... 15
- Pedestal, size of supply outlets for flush valves ... 14
- Size of trap and drain for ... 12
- Stall, fixture-unit value of ... 40
- Stall, public, fixture-unit value of ... 15
- Stall, size of supply outlets for flush valves ... 14
- Stall, size of trap and drain for ... 12
- Trough, size of trap and drain for ... 12
- Wall, fixture-unit value of ... 40
- Wall, public, fixture-unit value of ... 15
- Wall, size of supply outlets for flush valves ... 14
- Water-demand estimates for ... 44

V

Valves:
- Allowance for friction loss in ... 41
- Back-pressure, for subsoil drain ... 18
- Backwater ... 13
- Flush, fixture-unit value of ... 40
- Flush, size of supply outlets for ... 14
- Relief, location of ... 14
- Replaced, inspections and tests of, not needed for ... 24

Vent pipes, separate tests of ... 24
Vent stack:
- Connection to soil stack ... 18
- Connection to primary branch ... 18
- Connection to stack-vent ... 18
- Connection to waste stack ... 18
- Definition ... 9
- Required ... 18
- Size and length of ... 21
- To terminate in open air ... 18

Vent system:
- Air-pressure test of ... 23
- Smoke test of ... 23

Vent terminals:
- Alterations to ... 22
- Downward opening of ... 22
- Location of ... 22
- Location of windows in relation to existing ... 22
- Screening of ... 22
- To be calked ... 22
- To be flashed ... 22
- To be sealed ... 22

Ventilating openings, relation of vent terminals to ... 22
Ventilation ... 14
Venting:
- Group ... 19
- Limits of circuit and loop ... 20
- Of bathroom groups ... 19
- Of bathtub trap ... 19
- Of combination kitchen-sink-and-tray ... 19
- Of kitchen sink ... 19
- Of kitchen-sink trap ... 19
- Of lavatory trap ... 19
- Of shower-stall trap ... 19
- Of soil and waste stacks ... 15
- Of soil stacks ... 18
- Of waste stack ... 18
- Vents and ... 18

Page

Vents:
- And venting ... 18
- Back. *See* Back vent.
- Between interceptor and fixture traps ... 33
- Branch, definition ... 6
- Circuit. *See* Circuit vent.
- Definition ... 9
- Distance of trap from ... 18, 58
- Dry, definition ... 7
- Dual. *See* Dual vents.
- Dual relief. *See* Dual relief vents.
- For flat-bottomed fixtures ... 20, 60, 62
- For resealing traps ... 20, 60
- Frost closure of ... 22
- Group. *See* Group vents; *See also* Circuit vent; Dual vent.
- Location of ... 58
- Loop. *See* Loop vent.
- Main. *See* Main vent.
- Material of ... 18
- Not required ... 22
- Prohibited ... 22
- Relief. *See* Relief vents.
- Side. *See* Side vent.
- Size of ... 21
- Traps not requiring ... 22
- Unit. *See* Dual vents.
- Wet. *See* Wet vent.
- Yoke. *See* Yoke vents.
- *See also* Stack-vent.

Vitrified-clay pipe ... 10, 29
- Joints ... 11, 31

W

Wall hangers ... 12
Wall urinals. *See* Urinals.
Walls, allowance for projecting, in roof drainage ... 56
Washbasin:
- Private, fixture-unit value of ... 15
- Public, fixture-unit value of ... 15

Washroom lavatories ... 60
Waste, continuous ... 33
Waste pipes:
- Definition ... 9
- Estimating size of ... 15
- From food receptacles ... 22
- From ice boxes ... 22
- From refrigerators ... 22
- From sterilizers ... 22
- From water-cooling devices ... 22
- From water-heating devices ... 22
- From water-operated devices ... 22
- From water stills ... 22
- From water-treatment devices ... 22
- Indirect, definition ... 7
- Indirect connections to ... 22
- Material of ... 14
- Minimum sizes of ... 14, 46
- Separate tests of ... 24
- Sizes of ... 15, 47
- Soil and ... 14

Waste stacks:
- Capacity of ... 15
- Connection of vent stack to ... 18
- Fixture-unit ratings of ... 47
- Minimum size of ... 15
- Number of fixture units on ... 21
- Number of offsets on ... 15
- Size of, as related to main vent ... 21
- To be vertical ... 15
- Venting of ... 15, 18

Waste water, cooling methods for ... 22
Wastes:
- Acid or chemical ... 46
- *See also* Indirect wastes: Refrigerator wastes.

Water:
- Quality of ... 13, 33
- Quantity of ... 14
- Temperature of, entering building-drainage system ... 22
- Used in drainage-system tests ... 23

Water closet:
- Branch drain, relief vent from ... 19
- Drain, connection of horizontal branch to ... 19
- Drain, independent connections with ... 19
- Fixture-unit value of ... 44
- Flush valves, fixture-unit value of ... 40
- Flush valves, size of supply outlets for ... 14
- Flush tanks, fixture-unit value of ... 40
- Number permissible on horizontal branches ... 20
- Private, fixture-unit value of ... 15
- Public, fixture-unit value of ... 15
- Size of drain for ... 12
- Tanks, size of supply outlets for ... 14
- Water-demand estimates for ... 44

Water-cooling devices, waste pipes from ... 22
Water-distributing pipes for small buildings ... 43
Water-hammer ... 43
Water heaters, domestic, size of supply outlets for ... 14
Water-heating devices, waste pipes from ... 22
Water lift, discharge of exhaust pipes from ... 22

	Page
Water main, definition	9
Water-operated devices, waste pipes from	22
Water pipe, cast-iron	10, 29
Water piping, material of	14
Water seal. *See* Trap seals.	
Water-service pipe:	
Definition	9
Size of	13, 35
Water stills, waste pipes from	22
Water supply:	
And distribution	13
Demand, estimating for	35
Demand, estimating for continuous	42
Pipes, determining sizes of	42
Pipes, rules for determining sizes of	42
Protection of	13, 28, 46
System, air-pressure test of	23
System, definition	9
System, tests of	24
System, water test of	23
Tanks, discharge of overflow pipe from	22
Tanks, protection of	13
Water tanks, protection of	10
Water tests:	
Of drainage system	23
Of leaders	24
Of roof connections	24
Of water-supply system	23
Pressure in	23, 24
Time required for	23, 24
Watertight joints on combined sewerage system	18
Water-treatment devices, waste pipes from	22
Wet vent:	
Definition	9
Prohibited	22
Windows:	
Location of, in relation to existing vent stack	22
Relation of location of vent terminals to	22
Wiped joints	12
Wooden plugs prohibited	12
Work:	
Covering of	24
Defective	24
Uncovering if not inspected, tested, and approved	24
Workmanship	10
Workmen, toilet facilities for	22
Written approval of tests	24
Wrought-iron pipe	10, 30
Y	
Yard drains, separate tests of	24
Yards, drainage of	16
Yoke-vented branch, independent connections with	19
Yoke vents	19, 58
Definition	9
Z	
Zinc-coated sheet iron and steel	11, 31

WASHINGTON, October 4, 1940.

BUILDING MATERIALS AND STRUCTURES REPORTS

On request, the Superintendent of Documents, U. S. Government Printing Office, Washington, D. C., will place your name on a special mailing list to receive notices of new reports in this series as soon as they are issued. There will be no charge for receiving such notices.

An alternative method is to deposit with the Superintendent of Documents the sum of $5.00, with the request that the reports be sent to you as soon as issued, and that the cost thereof be charged against your deposit. This will provide for the mailing of the publications without delay. You will be notified when the amount of your deposit has become exhausted.

If 100 copies or more of any paper are ordered at one time, a discount of 25 percent is allowed.

Send all orders and remittances to the *Superintendent of Documents, U. S. Government Printing Office, Washington, D. C.*

The following publications in this series are available by purchase from the Superintendent of Documents at the prices indicated:

BMS1	Research on Building Materials and Structures for Use in Low-Cost Housing	10¢
BMS2	Methods of Determining the Structural Properties of Low-Cost House Constructions	10¢
BMS3	Suitability of Fiber Insulating Lath as a Plaster Base	10¢
BMS4	Accelerated Aging of Fiber Building Boards	10¢
BMS5	Structural Properties of Six Masonry Wall Constructions	15¢
BMS6	Survey of Roofing Materials in the Southeastern States	15¢
BMS7	Water Permeability of Masonry Walls	10¢
BMS8	Methods of Investigation of Surface Treatment for Corrosion Protection of Steel	10¢
BMS9	Structural Properties of the Insulated Steel Construction Co.'s "Frameless-Steel" Constructions for Walls, Partitions, Floors, and Roofs	10¢
BMS10	Structural Properties of One of the "Keystone Beam Steel Floor" Constructions Sponsored by the H. H. Robertson Co	10¢
BMS11	Structural Properties of the Curren Fabrihome Corporation's "Fabrihome" Constructions for Walls and Partitions	10¢
BMS12	Structural Properties of "Steelox" Constructions for Walls, Partitions, Floors, and Roofs Sponsored by Steel Buildings, Inc	15¢
BMS13	Properties of Some Fiber Building Boards of Current Manufacture	10¢
BMS14	Indentation and Recovery of Low-Cost Floor Coverings	10¢
BMS15	Structural Properties of "Wheeling Long-Span Steel Floor" Construction Sponsored by Wheeling Corrugating Co	10¢
BMS16	Structural Properties of a "Tilecrete" Floor Construction Sponsored by Tilecrete Floors, Inc	10¢
BMS17	Sound Insulation of Wall and Floor Constructions	10¢
BMS18	Structural Properties of "Pre-Fab" Constructions for Walls, Partitions, and Floors Sponsored by the Harnischfeger Corporation	10¢
BMS19	Preparation and Revision of Building Codes	15¢
BMS20	Structural Properties of "Twachtman" Constructions for Walls and Floors Sponsored by Connecticut Pre-Cast Buildings Corporation	10¢
BMS21	Structural Properties of a Concrete-Block Cavity-Wall Construction Sponsored by the National Concrete Masonry Association	10¢
BMS22	Structural Properties of "Dun-Ti-Stone" Wall Construction Sponsored by the W. E. Dunn Manufacturing Co	10¢
BMS23	Structural Properties of a Brick Cavity-Wall Construction Sponsored by the Brick Manufacturers Association of New York, Inc	10¢
BMS24	Structural Properties of a Reinforced-Brick Wall Construction and a Brick-Tile Cavity-Wall Construction Sponsored by the Structural Clay Products Institute	10¢
BMS25	Structural Properties of Conventional Wood-Frame Constructions for Walls, Partitions, Floors, and Roofs	15¢
BMS26	Structural Properties of "Nelson Pre-Cast Concrete Foundation" Wall Construction Sponsored by the Nelson Cement Stone Co., Inc	10¢
BMS27	Structural Properties of "Bender Steel Home" Wall Construction Sponsored by The Bender Body Co	10¢
BMS28	Backflow Prevention in Over-Rim Water Supplies	10¢

[List continued on cover page IV]

BUILDING MATERIALS AND STRUCTURES REPORTS

[Continued from cover page III]

BMS29	Survey of Roofing Materials in the Northeastern States	10¢
BMS30	Structural Properties of a Wood-Frame Wall Construction Sponsored by the Douglas Fir Plywood Association	10¢
BMS31	Structural Properties of "Insulite" Wall and "Insulite" Partition Constructions Sponsored by The Insulite Co	15¢
BMS32	Structural Properties of Two Brick-Concrete-Block Wall Constructions and a Concrete-Block Wall Construction Sponsored by the National Concrete Masonry Association	10¢
BMS33	Plastic Calking Materials	10¢
BMS34	Performance Test of Floor Coverings for Use in Low-Cost Housing: Part 1	10¢
BMS35	Stability of Sheathing Papers as Determined by Accelerated Aging	10¢
BMS36	Structural Properties of Wood-Frame Wall, Partition, Floor, and Roof Constructions with "Red Stripe" Lath Sponsored by the Western Paper and Manufacturing Co	10¢
BMS37	Structural Properties of "Palisade Homes" Constructions for Walls, Partitions, and Floors Sponsored by Palisade Homes	10¢
BMS38	Structural Properties of Two "Dunstone" Wall Constructions Sponsored by the W. E. Dunn Manufacturing Co	10¢
BMS39	Structural Properties of a Wall Construction of "Pfeifer Units" Sponsored by the Wisconsin Units Co	10¢
BMS40	Structural Properties of a Wall Construction of "Knap Concrete Wall Units" Sponsored by Knap America Inc	10¢
BMS41	Effect of Heating and Cooling on the Permeability of Masonry Walls	10¢
BMS42	Structural Properties of Wood-Frame Wall and Partition Constructions with "Celotex" Insulating Boards Sponsored by the Celotex Corporation	10¢
BMS43	Performance Test of Floor Coverings for Use in Low-Cost Housing: Part 2	10¢
BMS44	Surface Treatment of Steel Prior to Painting	10¢
BMS45	Air Infiltration Through Windows	10¢
BMS46	Structural Properties of "Scot-Bilt" Prefabricated Sheet-Steel Constructions for Walls, Floors, and Roofs Sponsored by the Globe-Wernicke Co	10¢
BMS47	Structural Properties of Prefabricated Wood-Frame Constructions for Walls, Partitions, and Floors Sponsored by American Houses, Inc	10¢
BMS48	Structural Properties of "Precision-Built" Frame Wall and Partition Constructions Sponsored by the Homasote Co	10¢
BMS49	Metallic Roofing for Low-Cost House Construction	10¢
BMS50	Stability of Fiber Building Boards as Determined by Accelerated Aging	10¢
BMS51	Structural Properties of "Tilecrete Type A" Floor Construction Sponsored by the Tilecrete Corporation	10¢
BMS52	Effect of Ceiling Insulation on Summer Comfort	10¢
BMS53	Structural Properties of a Masonry Wall Construction of "Munlock Dry Wall Brick" Sponsored by the Munlock Engineering Co	10¢
BMS54	Effect of Soot on the Rating of an Oil-Fired Heating Boiler	10¢
BMS55	Effect of Wetting and Drying on the Permeability of Masonry Walls	10¢
BMS56	A Survey of Humidities in Residences	10¢
BMS57	Roofing in the United States—Results of a Questionnaire	10¢
BMS58	Strength of Soft-Soldered Joints in Copper Tubing	10¢
BMS59	Properties of Adhesives for Floor Coverings	10¢
BMS60	Strength, Absorption, and Resistance to Laboratory Freezing and Thawing of Building Bricks Produced in the United States	15¢
BMS61	Structural Properties of Two Nonreinforced Monolithic Concrete Wall Constructions	10¢
BMS62	Structural Properties of a Precast Joist Concrete Floor Construction Sponsored by the Portland Cement Association	10¢
BMS66	Plumbing Manual	20¢