THE INTERACTION OF HFC-125, FC-218 AND CF_3I WITH HIGH SPEED COMBUSTION WAVES

by

W.L. Grosshandler
Building and Fire Research Laboratory
National Institute of Standards and Technology
Gaithersburg, MD 20899
and
Grzegorz Gmurczyk
Science Applications Interactional Corp.
555 Quince Orchard Road
Gaithersburg, MD 20878

International CFC and Halon Alternatives Conference & Exhibition - Stratospheric Ozone Protection for the 90's, October 21-23, 1995, Washington, DC. Sponsored by the Alliance for Responsible Atmospheric Policy. In Cooperation with the U.S. Environmental Protection Agency, Enviornment Canada, United Nations Environment Programme, and the U.S. Department of Agriculture. 1995.

NOTE: This paper is a contribution of the National Institute of Standards and Technology and is not subject to copyright.

THE INTERACTION OF HFC-125, FC-218 AND CF_3I WITH HIGH SPEED COMBUSTION WAVES*

William L. Grosshandler
Building and Fire Research Laboratory
National Institute of Standards and Technology
and
Grzegorz Gmurczyk
Science Applications International Corporation

Abstract

Live-fire, full-scale testing has been conducted at Wright-Patterson Air Force Base to identify an agent to replace CF_3Br (halon 1301) for suppressing fires in military aircraft dry bays. The three chemicals being considered (HFC-125, FC-218 and CF_3I) had been evaluated in a previous laboratory study, in which unique properties of each chemical were identified in small-scale experiments. The CF_3I required the least mass to suppress a turbulent spray flame but performed less well in suppressing a quasi-detonation. FC-218 performed the best in the presence of a quasi-detonation. HFC-125 was recommended previously as a candidate because of its superior dispersion characteristics; however, this chemical produced large over-pressures in the deflagration/detonation tube. The high pressures motivated the current study to determine the initial conditions which would lead to dangerous situations, and to explore a less extreme regime more representative of a realistic threat. The deflagration/detonation tube was lengthened from 7.5 to 10 m, the spiral insert in the test section was removed, and the fuel was switched from ethene to propane to produce uninhibited pressure ratios below 9:1 and turbulent flame speeds between 300 and 600 m/s. Based upon over a hundred experiments with the modified facility, it was possible to reconfirm the conclusion that FC-218 provides the most consistent performance over the widest range of fuel/air mixtures and tube geometries. The CF_3I has the greatest positive impact at low partial pressure fractions, but exhibits non-monotonic behavior of flame speed and shock pressure ratio at increasing concentrations. The dangerously high over-pressures previously exhibited by HFC-125 were not observed during suppression under more moderate (and realistic) combustion conditions. Considering these results alone, all three agents remain viable candidates for dry-bay applications.

Background

A dry bay on a military aircraft is a normally confined space adjacent to a fuel tank. The bay may or may not be ventilated, and is usually cluttered with electronic, hydraulic and mechanical components. During combat operations a combustible mixture and an ignition source could co-exist in a bay if it were penetrated by an anti-aircraft projectile. As a result, Navy and Air Force aircraft need specialized protection to prevent an explosion and the spread of fire from dry bays. Compared to the events leading to aircraft engine nacelle fire suppression, the required timing is two orders-of-magnitude faster for dry bay protection.

Although actual measurements of fuel concentrations in a dry bay during live-fire testing have never been made, one could envision a worst-case situation in which the fuel is vaporized and partially premixed with the air just prior to ignition, producing a rapidly moving turbulent flame. If the

*This work was co-sponsored by the US Naval Air Systems Command and the USAF Flight Dynamics Laboratory, Wright Patterson AFB.

suppressing agent were not well mixed and the dry bay geometry were conducive, the turbulent flame could accelerate, generating a shock wave ahead of it and transitioning to a detonation before encountering the agent.

In a previous study at NIST (Grosshandler et al., 1994) the performance of over a dozen fire-fighting agents in extinguishing different types of laboratory-scale fires was investigated. One of the laboratory-scale devices, a deflagration/detonation tube, was designed to idealize the environment in a closed dry bay. Ethene was chosen as the fuel because it was known to detonate easier than many other hydrocarbons. This provided a severe test for all the agents under conditions that were not duplicated in any of the other bench-scale studies.

Subsequent to the previous study, three chemicals were selected by the government Technology Transition Team to be included in the complete full-scale experimental matrix conducted at Wright Patterson AFB (Carbaugh, 1993): HFC-125 (C_2HF_5), FC-218 (C_3F_8) and CF_3I. Measurements had revealed that the amount of FC-218 required to suppress totally the combustion reaction in the deflagration/detonation tube was less than the amount of HFC-125 required. Also revealed were high over-pressures when HFC-125 was added within a certain concentration range. For example, 6 % (vol.) HFC-125 in the test section with a lean mixture of ethene and air led to a quasi-detonation which increased the pressure 37-fold, double the pressure ratio (i.e., the pressure behind the shock divided by the pressure (100 kPa) ahead of the shock) when no agent was present. The FC-218 behaved quite differently, and rarely enhanced the pressure increase by more than 25 %. These results favored the selection of FC-218 over HFC-125 for dry bay protection.

Few flame suppression experiments had been conducted with CF_3I that were applicable to dry bays. The previous deflagration/detonation tube results indicated an unusual behavior that could also be observed with CF_3Br, but to a lesser extent. Both chemicals were equally effective in low concentrations at reducing the pressure build-up. At mole fractions greater than about 2 % the chemistry was altered and the pressures rose. Increasing the CF_3Br concentration benefitted suppression at mole fractions greater than 3 %, and total suppression of the flame occurred above 6 %. The pressure ratio in the CF_3I tests continued to rise with concentration up to a mole fraction of 6 %, reaching a pressure greater than the uninhibited mixture. That is, adding 6 % CF_3I to a lean ethene/air flame exacerbated the situation. It took a mole fraction of over 12 % to completely suppress the pressure build-up.

The maximum pressure ratios observed in full-scale live-fire testing of uninhibited propane air mixtures are less than 7:1, and photographic evidence from full-scale dry bay testing with jet fuels suggests that turbulent flame speeds are below 300 m/s (Bennett, 1993). The previous experiments at NIST created uninhibited pressure ratios up to 25:1 and quasi-detonation velocities over 1100 m/s (Grosshandler et al., 1994). By changing the fuel and adjusting the geometry of the deflagration/detonation tube, the pressure ratio and velocity of the combustion wave can be reduced, allowing determination of whether or not a dangerous over-pressure arises during suppression under conditions that represent more likely threat scenarios.

A number of specific tasks were performed in the current study using the deflagration/detonation tube apparatus. First, experiments were conducted to determine the range of wave speeds and pressure ratios obtainable in the tube using propane rather than ethene. The objective of this task was to manipulate the initial conditions to produce, in a predictable manner, turbulent combustion waves up to twice the speed of sound (about 650 m/s) with pressure ratios between 3 and 10. The variables at our disposal were the propane/air ratio, the fuel partial pressure, and the length of the tube and internal spiral. The conditions which led to repeatable subsonic flames were noted. Second, the pressure ratios and wave speeds were measured in lean, stoichiometric and rich propane/air mixtures over a range of HFC-125, FC-218 and CF_3I mole fractions in the test section. The uninhibited conditions were chosen to produce combustion waves moving less than twice the speed of sound and pressure ratios smaller than 10:1. The results of these experiments and their implications regarding the selection of a fire-fighting agent for protecting aircraft dry bays are presented in the following sections.

Experimental Facility

The heart of the deflagration/detonation tube is shown schematically in Figure 1. The left hand side of the picture shows a fragment of the driver section. Prior to ignition (with a spark), it is separated by a gate valve from the test section on the right hand side of the picture. The flame/shock system is fully established before entering the region containing the agent. The driver section is 50 mm in diameter, 5 m long, and is filled with a combustible mixture of fuel and air. The test section contains the gaseous agent along with the same fuel/air mixture used in the driver section. The diameter of the test section is 50 mm and its length is either 2.5 m or 5.0 m.

The flame and shock signals serving to determine velocities and pressures were taken 2.2 m downstream behind the gate valve when the 2.5 m long test section of the tube was installed. The 5 m test section was used without the spiral insert. The additional length was necessary to eliminate the reflected shock wave that sometimes interfered with a slower moving primary reaction front. The flame signals serving to determine velocities in the long tube were taken close to the entrance region of the test section, 0.3 m downstream of the gate valve, to better ascertain the immediate impact of the inhibitor on the flame dynamics; the shock signals were measured 2.2 m into the test section, which is the same location used with the short tube. The incident shock wave speed and pressure ratio were determined from piezoelectric transducer signals, and the time between activation of photodiodes was used to calculate the speed of the radiation front. Additional details of the facility design, measuring equipment, data acquisition and operating procedure can be found elsewhere (Gmurczyk and Grosshandler, 1995; Grosshandler et al., 1994).

Experimental Results

The following independent parameters were changed during the course of the experiments: type of suppressant (C_2HF_5, C_3F_8, and CF_3I); concentration of suppressant; type of fuel (ethene or propane); equivalence ratio of the combustible mixture (lean, stoichiometric, rich); geometry of the tube (2.5 or 5 m long test section, with or without spiral). The dependent parameters that were used to characterize the combustion within the test section were the pressure rise across the shock, the speed of the shock, and the speed of the chemically reacting radiation front.

The gas mixtures were established from the partial pressures of the fuel, air, and agent components measured with static pressure transducers. The absolute uncertainty in partial pressure percentages reported is estimated to be less than $\pm$ 0.3 %. The initial temperature and total pressure were maintained constant at 22 °C $\pm$ 3 °C and 100 kPa $\pm$ 0.6 kPa, respectively. The accuracy of the shock wave measurements was affected by the dynamic pressure transducer, amplifiers, data acquisition system, and readout device. Assuming additivity of errors, the resultant accuracy of determining the shock pressure is $\pm$ 2.2%. The shock speed could be estimated to be accurate to better than $\pm$ 4.4% of the reported value, while the combined accuracy of the radiation wave speed is estimated to be $\pm$ 2 % of the range.

The repeatability of the measurements was affected by the following factors: uncertainty in the initial mixture composition; opening of the gate valve; the ignition parameters; formation/propagation of the flame/shock; vibrations of the spiral insert; and ambient temperature changes (ambient air pressure and humidity changes did not affect the results as air was supplied from a gas cylinder). Because each of these factors has an indeterminate randomness associated with it, one test condition was repeated eleven times to quantify the precision of the experiment. The maximum absolute deviations of the dependent parameters were found to be $\pm$ 38 m/s for radiation wave speed, $\pm$ 25 m/s for the shock speed, and $\pm$ 0.38 for the shock pressure ratio. Additional discussion of the experimental errors is provided by Gmurczyk and Grosshandler (1995).

Uninhibited propane/air mixtures were evaluated in the 2.5 m test section, with and without the spiral insert in place. Figure 2 shows the dependence of the shock/radiation wave speed on equivalence

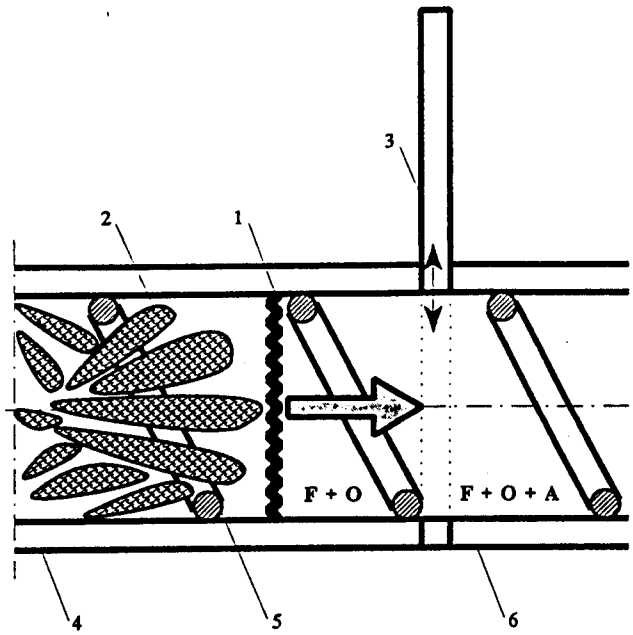

1 - SHOCK WAVE, 2 - TURBULENT FLAME, 3 - GATE VALVE,
4 - DRIVER SECTION, 5 - SPIRAL INSERT, 6 - TEST SECTION,
F - FUEL, O - OXIDIZER, A - AGENT

Figure 1. Schematic of shock/turbulent flame entering test section of deflagration/detonation tube.

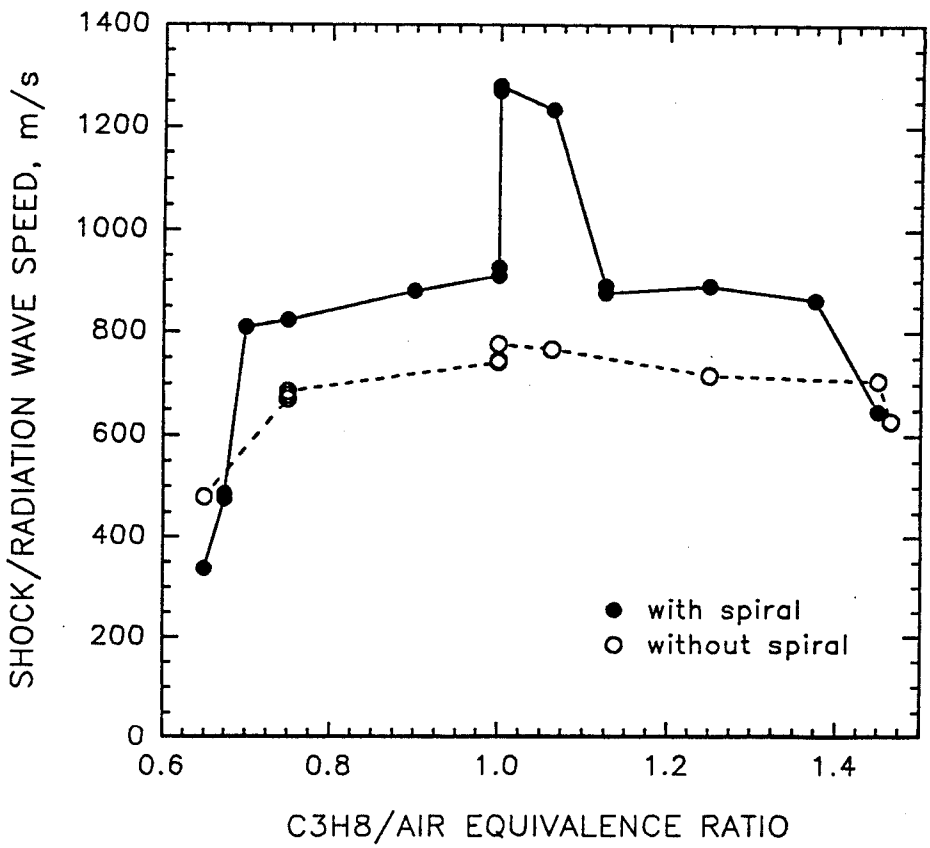

Figure 2. Wave speed in propane/air system showing influence of equivalence ratio and sprial insert.

ratio. The shock wave generated by the accelerating flame was detectable for equivalence ratios between 0.65 and 1.45, both with the spiral present and absent. A maximum shock speed of about 1300 m/s was recorded for the stoichiometric case with the spiral in place, considerably less than the 1900 m/s found in the ethene/air mixtures (Gmurczyk and Grosshandler, 1995; Grosshandler et al, 1994). The radiation wave traveled in tandem with the shock wave for speeds above 800 m/s.

The performance of C_2HF_5, C_3F_8, and CF_3I was assessed by comparing the velocity and pressure ratios attained in the lean, stoichiometric, and rich ethene/air and propane/air mixtures, with and without the presence of obstacles in the test section. Pure nitrogen was placed in the test section as a benchmark to compare its behavior to the above alternatives. In the ethene/air mixtures, the radiation ceased when the test section was filled with N_2, but only under lean and stoichiometric conditions. In the rich mixture a nonzero radiation wave speed was detected. This means that the residual flame from the driver section of the tube entered the suppression section, since the radiation wave speed was measured just behind the gate valve separating the two sections. The shock speed decreased as the wave entered the pure nitrogen test section because of the disappearance of the energy supplied by exothermic chemical reactions; the shock pressure ratio dropped significantly from enhanced viscous dissipation when the spiral was in place.

With propane as the fuel, the radiation remained for all equivalence ratios even when 100% N_2 was placed in the test section, with wave speeds measured up to 100 m/s. The initial velocity in nitrogen was lower, but it was more stable on contact with an inert environment. The measured shock speeds and pressure ratios in the propane/air mixtures were approximately proportional to the initial shock speeds established in the driver section of the tube.

The primary motivation for conducting more research in the deflagration/detonation tube is shown in Fig. 3. The data for the lean C_2H_4/air mixture in the 2.5 m test section containing the spiral insert was collected in the earlier NIST study (Grosshandler et al., 1994). The shock pressure ratio reached a maximum of 37:1 for a 6% (vol.) mixture of C_2HF_5. This is more than double the pressure increase had no suppressant been added, clearly an untenable situation were it to occur in a dry bay. The data points indicated by triangles in Fig. 3 were taken with no spiral insert in the 5.0 m long test section. The initial shock pressure ratio is reduced by a factor of 3, and remains below 9:1 out to a partial pressure fraction of 10%. The sensitivity of the C_2HF_5/C_2H_4/air mixture to small perturbations in the initial test conditions became apparent when the 6% experiment was repeated and resulted in the 34:1 pressure ratio seen in Fig. 3 that is indicative of a detonation. Except for that one case, removing the spiral greatly reduced the severity of the combustion wave.

Dozens of additional experiments were conducted with C_2HF_5 to examine the relation of the different independent parameters to the severity of the pressure and radiation waves. An equal number of experiments were conducted with C_3F_8 and CF_3I substituted for C_2HF_5. These are all reported by Gmurczyk and Grosshandler (1995). The relative performance of the three alternative agents is compared in Fig. 4 for stoichiometric propane/air mixtures in the 5 m long test section. C_3F_8 causes the combustion wave speed to decrease in a monotonic manner, with suppression occurring when the partial pressure fraction is 8%. Full suppression is attained with C_2HF_5 at a concentration of 10%; however, 2% and 6% levels of C_2HF_5 strongly enhance the exothermic reaction. The CF_3I is relatively well behaved, but requires the largest amount (on both a molar and mass basis) of the three agents to fully quench the radiation. Table 1 is a summary of the experimental results, comparing the influence of agent type, fuel composition, and equivalence ratio on the pressure and wave speed attained in the test section of the deflagration/detonation tube.

The exact conditions that are likely to exist in a dry bay prior to a fire or explosion are impossible to control. Unfortunately, the relative behavior of the three agents under investigation is strongly dependent upon the initial conditions, causing one chemical to be clearly superior under one arrangement and the same chemical to perform poorly in another. There are some general statements about the behavior of this system that can be made, though. For example, obstacles in the test section lead to higher shock pressure ratios and initial speeds; ethene/air mixtures lead to higher shock pressure ratios and speeds; a residual shock wave remains even when the combustion wave is extinguished; and

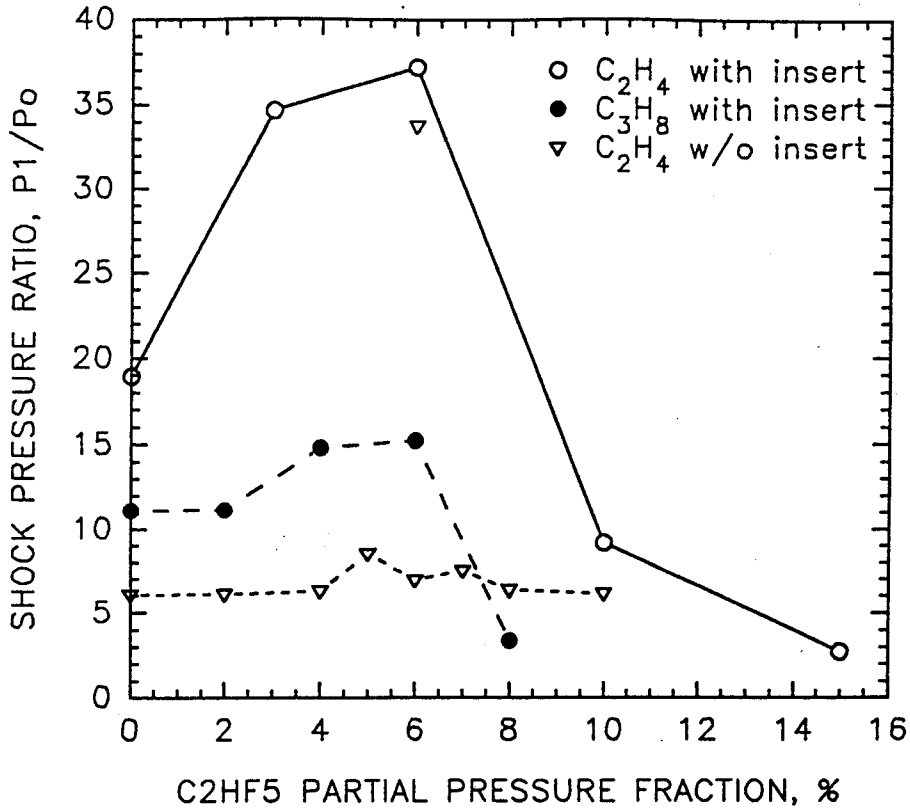

Figure 3. Effect of C_2HF_5 inhibition on pressure build-up, showing influence of fuel and geometry.

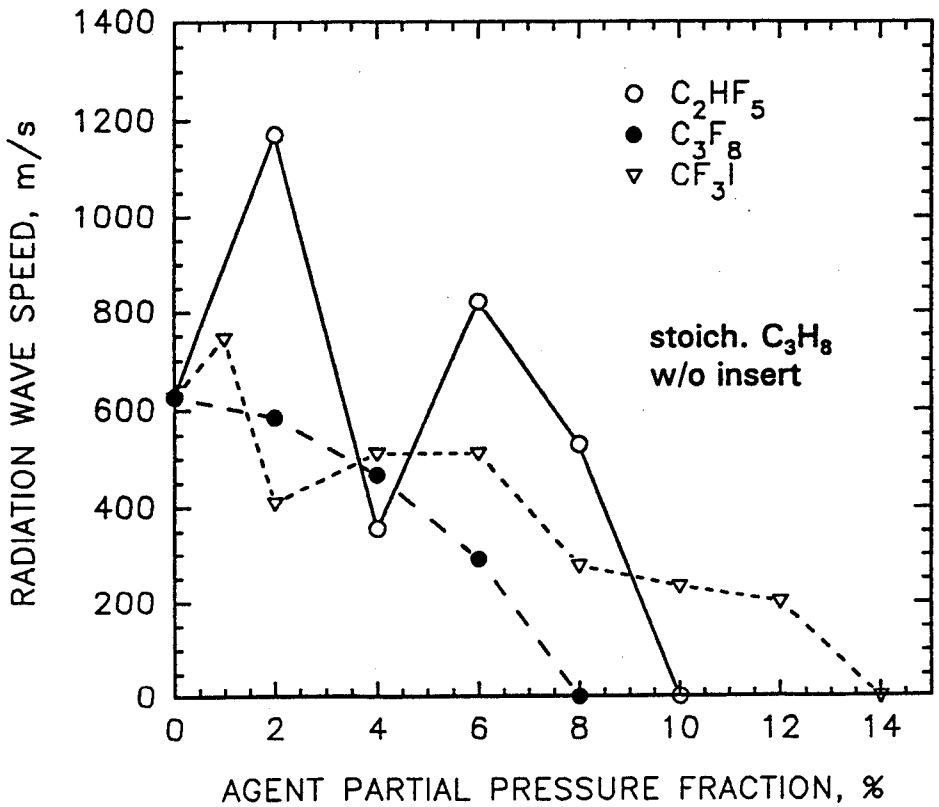

Figure 4. Effect of agent inhibition on radiation wave speed, comparing HFC-125, FC-218 and CF_3I.

Table 1. Summary of experimental results in deflagration/detonation tube

Parameter	Agent	Fuel and Equivalence Ratio					
		Ethene[a] $\Phi = 0.75$ Quasi-detonation	Ethene[a] $\Phi = 1$ Quasi-detonation	Ethene[a] $\Phi = 1.25$ Quasi-detonation	Propane[b] $\Phi = 0.86$ Turbulent Flame	Propane[b] $\Phi = 1.0$ Turbulent Flame	Propane[b] $\Phi = 1.25$ Turbulent Flame
Maximum Pressure Ratio[c] (@ partial pressure %)[d]	none	18 (0%)	26 (0%)	35 (0%)	8.1 (0%)	8.8 (0%)	8.3 (0%)
	N_2[g]	2.5 (100%)	3.5 (100%)	[h]	4.5 (100%)	4.6 (100%)	4.5 (100%)
	C_2HF_5	37 (6%)	29 (6%)	35 (0%)	8.5 (4%)	8.8 (2%)	8.3 (0%)
	C_3F_8	24 (2%)	33 (2%)	37 (2%)	8.2 (2%)	9.5 (2%)	8.5 (2%)
	CF_3I	21 (6%)	27 (6%)	35 (6%)	8.1 (0%)	8.8 (0%)	8.3 (0%)
Maximum Reaction Wave Speed[e], m/s (@ partial pressure %)[d]	none	1170 (0%)	1400 (0%)	1530 (0%)	330 (0%)	620 (0%)	510 (0%)
	N_2[g]	0 (100%)	0 (100%)	[h]	100 (100%)	100 (100%)	50 (100%)
	C_2HF_5	1170 (0%)	1410 (3%)	1530 (0%)	510 (2%)	1180 (2%)	510 (0%)
	C_3F_8	1250 (2%)	1400 (2%)	1530 (0%)	460 (2%)	620 (0%)	510 (0%)
	CF_3I	1170 (0%)	1400 (0%)	1530 (0%)	450 (1%)	740 (1%)	590 (1%)
Suppression Partial Pressure Percent[f]	N_2[g]	40%	[h]	[h]	[h]	[h]	[h]
	C_2HF_5	13 to 15%	13 to 15%	13 to 15%	7.5 to 8%	9 to 10%	5 to 6%
	C_3F_8	8 to 10%	> 10%	> 10%	5 to 6%	7 to 8%	3 to 4%
	CF_3I	> 10%	> 12%	13 to 14%	5.5 to 6%	13 to 14%	7 to 8%

[a] 2.5 m test section, with spiral insert, measurement location 2.2 m into test section
[b] 5.0 m test section, without spiral insert, measurement location 0.3 m into test section
[c] ± 5% of value relative uncertainty
[d] ± 1% absolute uncertainty, and note that 0% implies no enhancement over zero inhibitor conditions
[e] ± 11% of value relative uncertainty
[f] ± 1% abs. uncert., based upon no flame radiation or pressure ratio equal to that attained by 100% N_2
[g] 100% N_2 in test section
[h] no data available

the speed of the combustion wave without obstacles in the flow responds to the agents in a more chaotic manner than the shock pressure ratio.

The variability of agent performance with initial conditions is reflected in Fig. 5 in an attempt to generalize the impact of C_2HF_5 concentration on outcome of the experiment. The normalized response parameter plotted on the ordinate is defined as the ratio of the value of the combustion wave speed, shock speed, or shock pressure ratio when no agent is present to the corresponding value when extinction has occurred. A value equal to or greater than unity for the normalized performance parameter means that the agent has, at best, no beneficial impact on the combustion process, and an exacerbating influence at worst. A performance parameter near zero is desirable, indicating close to total suppression. The volume percent plotted on the abscissa in Fig. 5 is identical to the partial pressure percent of C_2HF_5 assuming the mixture behaves as an ideal gas. The solid line represents the average of dozens of experiments conducted at any one volume percent. On average, C_2HF_5 cuts the magnitude of the

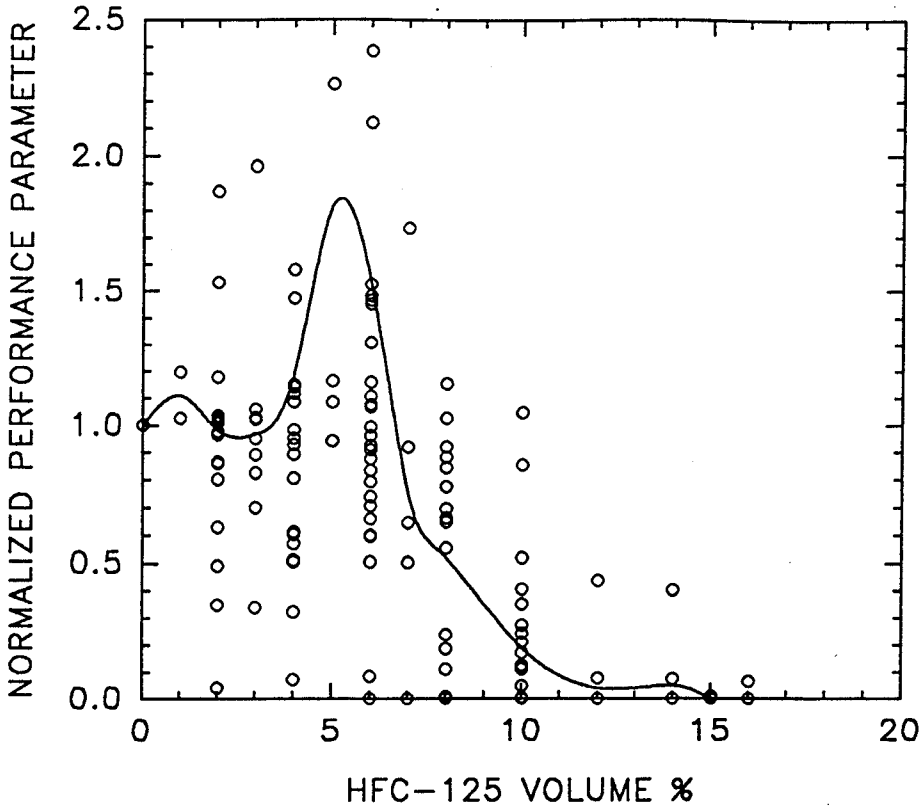

Figure 5. Summary of effectiveness of HFC-125 in suppressing combustion wave in all experiments.

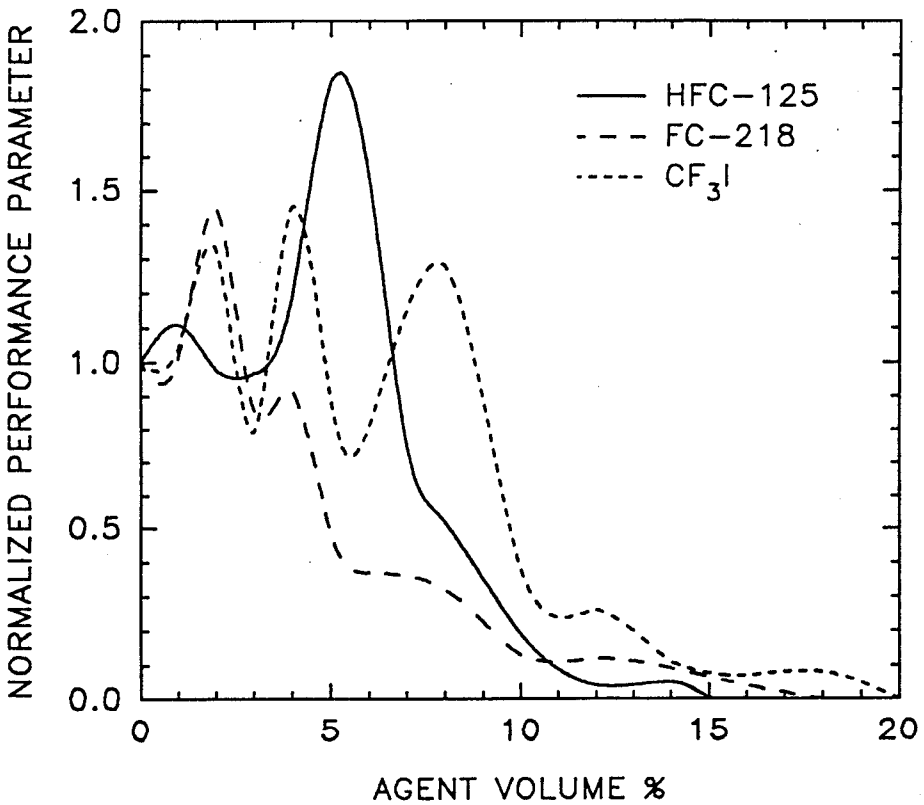

Figure 6. Relative effectiveness of HFC-125, FC-218 and CF_3I in suppressing high speed combustion.

deflagration/detonation threat in half when its concentration is greater than about 8 %. However, it produces pressures and wave speeds higher by a factor of 1.8 at concentrations near 5 %. A 90 % reduction in threat requires 11 % C_2HF_5 (on average), and total extinction of the exothermic reaction under all conditions examined in this study requires greater than 16% of the agent.

Figure 6 compares the average experimental performance parameters of the three agents. The performance of C_3F_8 is plotted as the long-dashed line. It achieves a 50 % threat reduction for concentrations greater than 5%, while a volume fraction of almost 9.5% is required of CF_3I (dotted line) to reduce the combustion activity to half. All three agents **increase** the threat for lesser concentrations. The C_3F_8 and CF_3I produce close to a 50% overshoot when the volume fractions are, respectively, 2 % and 4%. The CF_3I is much more chemically reactive than the other agents, undergoing three transitions between suppression and enhancement as its concentration is increased. A 90 % reduction in threat requires 14 % CF_3I and 13 % C_3F_8, compared to only 11 % for C_2HF_5. Total extinction of the exothermic reaction under all conditions examined in this study requires greater than 20, 18 and 16 %, respectively, of CF_3I, C_3F_8 and C_2HF_5.

Conclusions

The following summary statements are made based on the results obtained:

a. Depending on their concentrations, the presence of the three extinguishing compounds in the propane/air mixtures causes the combustion either to be enhanced or suppressed, often with complex extrema exhibited. The erratic behavior is diminished, however, when the mixtures become richer in fuel content.

b. FC-218 (C_3F_8) is the most effective extinguishing compound in suppressing and attenuating flame/shock systems in lean, stoichiometric, and rich ethene/air and propane/air mixtures.

c. The dangerously high over-pressures previously exhibited by HFC-125 (C_2HF_5) were not observed during suppression under more moderate (and likely) combustion conditions.

d. CF_3I is the best agent for attenuating shock pressure ratio in the lean, stoichiometric and rich propane/air mixtures. Such performance may be attributed to the significant endothermicity of CF_3I decomposition during the passage of the shock through the unburned mixtures.

Considering the results from this study alone, there is no reason to eliminate any of the three agents from consideration as a candidate for dry bay fire protection.

References

Bennett, M., Survivability Enhancement Branch, Wright-Patterson AFB, personal communication, 1993.

Carbaugh, S.G., Survivability Enhancement Branch, Wright-Patterson AFB, Minutes of T2 Meeting, October 14, 1993.

Grosshandler, W.L., Gann, R.G., and Pitts, W.M., editors, *Evaluation of Alternative In-flight Fire Suppressants for Full-scale Testing in Simulated Aircraft Engine Nacelles and Dry Bays*, NIST Special Publication 861, Gaithersburg, April 1984.

Gmurczyk, G., and Grosshandler, W.L., "Suppression of High Speed Flames and Quasi-detonations," Section 2 in *Laboratory Data for Aircraft Fire Suppression System Performance of Alternative Agents*, R.G. Gann, ed., NIST Special Publication, in press, 1995.