FIRE AND MATERIALS, VOL. 11, 31–43 (1987)

Ignitability Measurements with the Cone Calorimeter*

Vytenis Babrauskas and William J. Parker
Center for Fire Research, National Bureau of Standards, Gaithersburg, MD 20899, USA

The Cone Calorimeter is a new-generation instrument developed primarily for making rate of heat release measurements. This instrument, containing a uniform and well-characterized irradiance source, was also seen to be useful for making measurements of radiant ignition on materials. Data have now been collected for a wide range of materials. The effects of various apparatus dependencies are discussed. Also, some comparative data are available illustrating the performance of similar materials in other apparatuses. Finally, for a selected material, Douglas fir particle board, a detailed comparison with an ignition model has been made.

Key words: Cone Calorimeter; ignitability; plastics; radiant ignition; upholstered furniture; wood materials.

INTRODUCTION

Early ignitability testing was generally based on a furnace exposure to a small specimen, which was assumed to be of nearly uniform temperature.[1] The test procedure consisted of determining the furnace temperature at which ignition was first observed. A widely used procedure was the Setchkin furnace, developed in the late 1940s.[2] Such a test could not be used to study composite materials, nor to compare specimens of varying thicknesses.

Later, it was judged to be more useful in assessing the performance of materials and products if a substantially larger specimen were used, and if a relationship of the length of time needed to achieve ignition for a given heating flux was determined. Consequently, ignitability apparatuses have been designed where the heating source was primarily (1) radiant heat, (2) convective heat and (3) heating from direct flame impingement. Heating from direct flame impingement is common in a Bunsen burner-type test, a large number of which have been developed through the years.[3,4] The limitation of using this type of test is that the heat fluxes presented to the specimen are highly non-uniform, and consequently are difficult to analyze mathematically. Convective heating is understood to be a flow of hot gases directed at the specimen, without the nearby presence of flame. While convective heating apparatuses of various sorts have been built, this has not been commonly done for flammability testing purposes, both since convective heating is less important in room fires than radiative heating[5] and also due to practical difficulties. Thus, radiant heating can be considered to be the preferred form for an ignitability test.

The radiant heater

The most important feature of a radiant ignition test is its heater. In general, such a heater should be able to achieve adequately high irradiances, have a relatively small convective heating component, present a highly uniform irradiance over the entire exposed face of the specimen and be designed so as not to change its irradiance when the mains voltage varies, when heater element aging occurs or when the apparatus retains some residual heat from the exposure given to a prior specimen.

A room fire burning near its maximum rate can show gas temperatures over 1000°C, producing corresponding irradiances to walls and contens of 150 kW m^{-2}. Testing under such extreme conditions may not be required; nonetheless, if ignition in post-flashover fires is to be simulated, irradiances of over 75 kW m^{-2} should be available, and preferably closer to 100 kW m^{-2}. A significant convective component would negate the purpose of having a radiant ignition test. Rather low convective fluxes can be achieved for specimens oriented horizontally, face up, and with the prevailing air flow being upwards. When a vertical specimen orientation is considered, it becomes evident that a boundary layer will normally be expected to develop which will add some convective component. The convective boundary layer component is not uniform over the height of a specimen. Thus it is seen that better uniformity can also be expected under conditions where the convective component is minimized.

During an accidental fire, the actual ignition source that can be expected will, in most cases, be a fire in the vicinity of the target object. Its radiation spectrum will depend on the size of the fire. A very small fire can show a substantial fraction of its radiation at wavelengths characteristic of H_2O, CO_2 and other combustion products.[6] For larger fires—certainly for room fires reaching a hazardous condition—the radiation from the soot tends to dominate: the result is an approximation to a grey body radiation.[7] For such a grey body radiation the temperature will typically be in the vicinity of 1000°C.[8] Experimentally, heater choices for test apparatuses have included gas-fired panels, electric resistance heaters, flames and high-temperature lamps. Electrical heaters tend to have a near-grey body characteristic and, assuming a dull or oxidized surface condition, a high emissivity. Gas-fired panels derive a substantial portion of their radiation from the ceramic face. Thus, while there are discrete molecular wavelength peaks, overall the radiation shows a grey-body continuum, typically in the range of 700–1000°C temperatures.[9] High-temperature lamps, which have been used by several investigators,[6,10] typically have radiating temperatures of 2200–3000°C. The spectral

*This paper is a contribution of the National Bureau of Standards and is not subject to copyright.

Received 10 September 1986

distribution of such a source—further limited by a translucent enclosure—is much different from one operating at 1000°C. Whether this change in spectral characteristics is important depends on the surface of the material to be ignited. For a material with a radiant absorptance independent of wavelength, this source variation would not matter. Hallman, however, has reported data for a large number of plastics, which show that while there are some specimens with negligible wavelengths dependence to their absorptance, the majority show strong variations.[6] Hallman also made measurements of ignition times of plastics with both a flame source and high-temperature lamps. The effect on ignition times ranges from negligible to more than an order of magnitude, depending on the specimen. For a general purpose radiant ignition test, flames would probably be the least desirable source of heating. For a bench-scale test the size of flames has to be kept small. This means that such flames are optically thin, their emissivity is low and the higher heat fluxes could not be achieved unless a strong convective component were added.

Air flow rates

It is known that the convective flow rate of air passing across the sample can influence the times to ignition, especially that excessive air flow rates can give increased ignition times. One interpretation of this kind of observation is that the phenomenon of ignition can be visualized as the reaching of the lower limit of flammability in the volume of pyrolysates near the specimen surface. High air flow rates tend to dilute this volume and thus delay ignition. Another explanation is that the increased air flow simply cools the specimen and reduces its rate of pyrolysis.

Systematic guidance in this area is not available. However, as an example of the effect of air flow, measurements have been made in our laboratories using the OSU apparatus.[11] Specimens of black polymethylmethacrylate (PMMA) were exposed in the horizontal orientation to a heating flux of $35\,kW\,m^{-2}$. With an air flow of $12\,l\,s^{-1}$ through the combustion chamber, the ignition time was 209 s. When the air flow rate was doubled to $24\,l\,s^{-1}$, the specimen ignition time went up to 403 s.

Means of ignition

In some cases no external ignition source is desired, and specimen testing is to be done solely on the basis of autoignition. In most cases, however, an external ignition source is desirable. This ignition source should, in general, not impose any additional localized heating flux on the specimen. Apparatus designs have been developed[11] with impinging pilots, which can in some cases produce such high localized heat fluxes as to burn a hole through the specimen at the point of impingement yet not ignite it outside of that region. Applications for such devices would tend to be specialized, since the general objective of radiant ignition testing is to produce data which can be analyzed in the context of an assumed one-dimensional heat flow. The ignitor should reliably ignite a combustible gas mixture in its vicinity. Thus, the location of the ignitor must be chosen so that it is near the place where maximum evolution of pyrolysate gases is expected. Some materials are highly fire-retardant treated, and, when heated, emit vapors which tend to extinguish a pilot flame. The ignitor has to be designed so as not to be extinguished by fire-retardant compounds coming from the specimen nor by air flows within the test apparatus.

Specimen size and thickness

Both specimen area and thickness may be expected to have some effect on the ignitability. Simms[12] has studied in some detail the general problem of area effect on ignition. The effect is seen to be smaller when irradiances are high than when they are low. The exact magnitude of the effect is also dependent on the specimen's thermophysical properties. For specimens of area $0.01\,m^2$ or larger, however, the increase in ignition time is typically only 10% or so over what would be seen with a specimen of infinite area. The main practical size and thickness limitations come from the fact that the specimens to be tested should exhibit primarily one-dimensional heat transfer; thus the configuration should be such that excessive edge effects are not seen. If the specimen thickness is such that it is thermally thick (the heat wave penetration depth being less than the physical depth), then further increases in thickness are not expected to change ignitability results. For thinner specimens, however, there can be expected to be a thickness effect, and the backing or substrate material's thermophysical properties can be of importance.

Scope of present study

The context for radiant ignitability testing has already been presented, along with an outline of the design choices that are available and must be made. In the ensuing sections of this paper, prior related efforts in designing equipment for this purpose are briefly discussed; the detailed features of the Cone Calorimeter, as applicable to ignitability measurements are summarized; some typical data obtained at the National Bureau of Standards (NBS) using the Cone Calorimeter are presented; a comparison between the measured ignitability values and ones predicted from material ignition models is made; and a comparison with ignitability data obtained using selected apparatuses of different design, at different laboratories, is given.

BACKGROUND FOR THE DEVELOPMENT OF THE CONE CALORIMETER

While radiant ignition apparatuses have been designed and used in various civil defense activities in the 1950s and 1960s[13,14] tests for radiant ignitability have not been common. Radiant ignitability has been a part of the Ohio State University (OSU) test,[11] although, in operation there, an impinging pilot is usually also superimposed. The ISO (The International Organization for Standardization) ignitability apparatus, under development since the early 1970s,[15] represented the first widely used apparatus

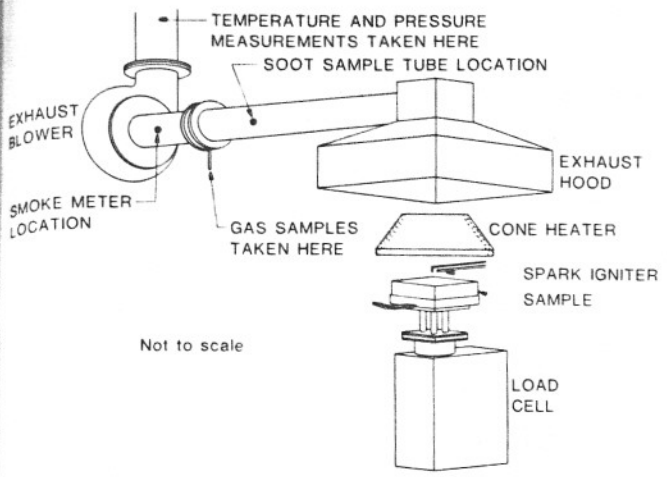

Figure 1. General view of Cone Calorimeter.

specifically designed for testing radiant ignitability. That apparatus, even in its earliest form, contained an especially appropriately designed thermal radiation source in the form of a truncated cone. This design eliminated the difficulty with most conventional designs, namely, that the specimen center is heated more than the edges. For ignitability measurements this was the main advantage for this heater geometry.

A few years later, at NBS, following experiments with a number of heat release rate apparatuses it was desired to develop a new instrument which, while still economically affordable for commercial testing laboratories, would alleviate most of the known difficulties of existing instruments. A significant shortcoming of a number of the existing designs that were capable of operating at high fluxes was that specimen irradiance uniformity was poor. The geometry of the ISO cone in the ignitability apparatus appeared to be ideal for use also within a heat release rate apparatus. The apparatus, as developed at NBS using the conical heater (Figs 1 and 2), became known as the Cone Calorimeter, and has been described in detail.[16,17] This apparatus has been put forth by the American Society for Testing and Materials (ASTM) as a proposed standard.[18]

Used in the Cone Calorimeter, the conical shape of the heater was seen to have additional advantages: it allowed the flame to exit the apparatus directly when used in the horizontal orientation (the Cone Calorimeter, unlike the ISO cone, is designed to also be usable with a vertical specimen and cone orientation), and it provided a geometry which deflected the flame plume in such a manner that a cold air sheath kept the combustion products from directly impinging on the heater elements. In addition to the ability to test in both orientations, the Calorimeter cone was designed with a different heating element and different mechanical layout details, which permit measurements to be made at irradiance of up to 110 kW m^{-2}, instead of being restricted to 50 kW m^{-2}, as is specified for the ISO cone.

A number of other features serve to differentiate the Cone Calorimeter from the ISO ignitability apparatus, in addition to the obvious one of being able to make heat release, mass loss and smoke measurements. The ISO ignitability apparatus uses a specimen 165 mm by 165 mm, which is exposed only at a circular opening of 140 mm diameter in the center. This is not objectionable *per se* for ignitability purposes alone, but for heat release rate testing would not be desirable since the difference between actual specimen surface area and radiatively exposed surface area would be substantial. The specimen holder in the Cone Calorimeter was designed so that there is only a very small, 3 mm, lip around the face of the specimen. Finally, the piloting arrangements are of a very different nature.

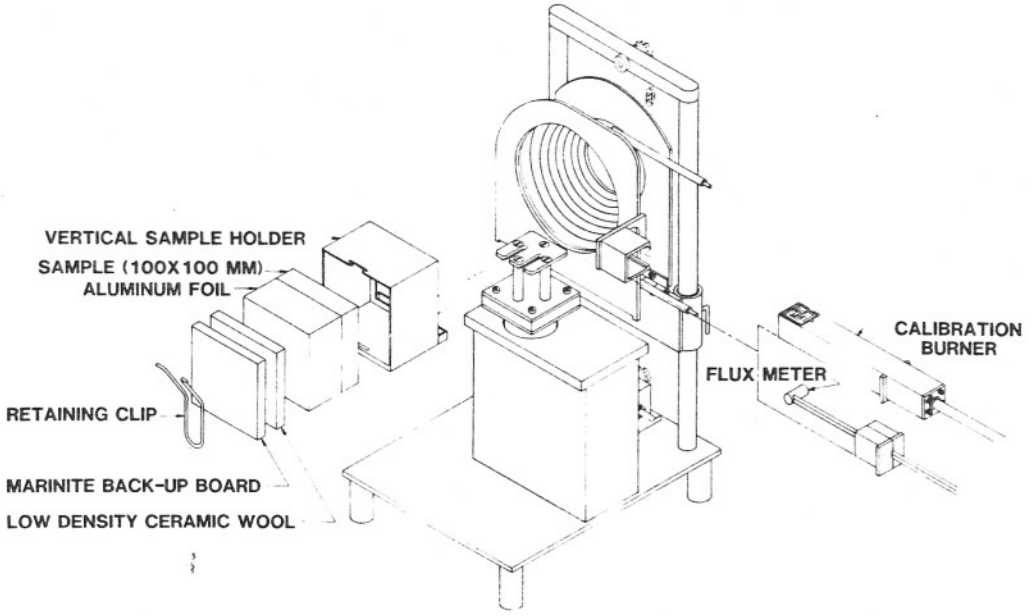

Figure 2. Detailed view of Cone Calorimeter (vertical orientation).

DETAILED FEATURES AND PERFORMANCE OF THE CONE CALORIMETER

Radiant heater

The radiant heater in the Cone Calorimeter is a wound resistance heating element, covered by an Incoloy[a] sheath. After a short period of conditioning the heater sheath assumes a dark, dull appearance. Measurements indicate[16] that the heater behaves as nearly an ideal black body, with an emissivity × view factor product of 0.85, and the effective emissivity approaching unity. This means that the spectral distribution is likely to be very close to that expected from room fires (neglecting the molecular radiation contribution from CO_2 and H_2O).

The uniformity of the heating flux over the face of the specimen in the Cone Calorimeter has been described.[16] Over the range of irradiances from 25 to 100 kW m^{-2}, the ratio of the flux at the specimen center to average flux varied only from 1.00 to 1.06. The peak deviations from average were typically 2% in the horizontal orientation and 7% in the vertical. Deviations are, perforce, higher in the vertical orientation, since the effect of convective fluxes, due to the boundary layer flow, is more pronounced there. Additional measurements have been made in the specimen-depth plane. This has been a special concern to the designers of the ISO apparatus, where a special compressive loading mechanism is provided which attempts to re-level the exposed surface, in case the specimen recedes due to melting. In the Cone Calorimeter, measurements have been made in the horizontal orientation using a small, 6 mm diameter Gardon-type heat flux gage. A flux mapping was obtained starting at the initial surface, and progressing down to the maximum depth of a specimen, which is 50 mm. A normal aluminium foil rectangular specimen wrap was used for these tests, but without any specimen. The results (Fig. 3) show that at heating fluxes of both 25 and 50 kW m^{-2} the deviations over the entire specimen depth are less than 10%, and can therefore be neglected. At the lower depths, reflection from the aluminium foil probably assists in maintaining this uniformity.

Means of ignition

The ISO apparatus was designed with a 'dipping' gas pilot, which is periodically thrust for a short while down close to the specimen face, then retracted. This solution, however, introduce an uncertainty into ignition times and provides further complexity. A gas pilot, in our experience, also requires oxygen premix to be used if a flame which is both small and resistant to blowout is to be achieved.[19] With highly fire-retardant-bearing products, even such precautions are not likely to lead to a reliable pilot: thus, for instance, the ISO apparatus uses a second pilot to reignite the main pilot. Pilot stability also tends to be crucially dependent on the physical condition of the pilot tube tip, and significant maintenance can be necessary. Finally, if used in a heat release apparatus, a gas pilot would also serve to add noise to the baseline of the heat release measurement. Initial experience at NBS with a more tractable alternative—electric spark ignition—

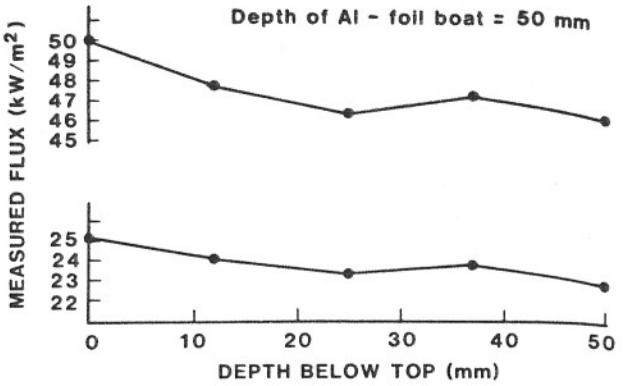

Figure 3. Measured flux at various positions below the upper edge of an aluminum foil boat of 50 mm depth.

was obtained with the NBS-II calorimeter,[20] where a spark plug arrangement was provided for ignition. This development was successful, and so a similar electric pilot was designed for the Cone Calorimeter. The location of the ignitor should be at the place where the lower flammable limit is expected to first be reached when the specimen begins its pyrolysis. It should, however, not be close to the specimen surface that minor swelling of the specimen would interfere with the ignition function. In the Cone Calorimeter, the ignitor locations were chosen so that when testing in the horizontal orientation the spark plug gap is located 13 mm above the center of the specimen; in the vertical orientation, the spark plug gap is located at the specimen plane and 5 mm above the top of the specimen holder.

Specimen size

In addition to the investigation by Simms, cited above, Nussbaum and Östman[21] have studied the ignition of specimen in an experimental apparatus somewhat similar to the Cone Calorimeter, but accommodating 200 by 200 mm specimens. Their comparison of the ignition times of these larger specimens against the standard 100 by 100 mm ones (Fig. 4) shows that quadrupling the specimen area decreases the ignition time by about 20%. Thus there is a scale effect, but it is modest.

Specimen thickness

The Cone Calorimeter is intended for testing actual commercial products. Thus the specimen thickness should be, as much as possible, the thickness of the finished product. There are limitations at both end of the scale, however. The instrument is restricted to testing specimens not thicker than 50 mm. For products which in their finished state are greater than 50 mm thick it can readily be seen that for almost any realizable combination of thermophysical properties and incident radiant fluxes, a 50 mm specimen is thermally thick, and increasing thickness would not change the ignition times.[22,23] By making calculations for various densities and heat fluxes using the model to be described below it was found that for particle board the minimum thickness required to

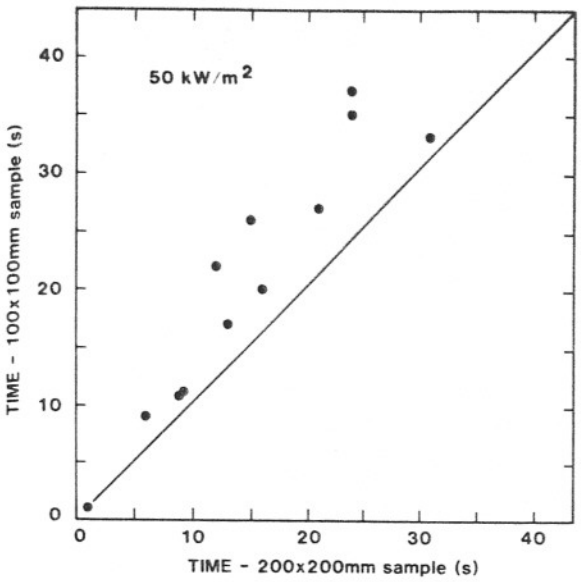

Figure 4. Comparison of ignition times for a variety of materials at 50 kW m^{-2} for two different specimen sizes.[21]

insure that the specimen is thermally thick can be represented by:

$$l = 0.6\rho/\dot{q}'' \quad (1)$$

where l is the thickness(mm), ρ is the density (kg m^{-3}) and $\dot{q}''$ is the heat flux (k W m^{-2}). This is probably a reasonable rule of thumb for other materials as well. The proportionality of the required thickness to $\rho/\dot{q}''$ is derived from classical heat conduction theory by equating the time for the front surface to reach the ignition temperature to the time for the rear surface temperature to begin to rise and assuming that the thermal conductivity is proportional to the density. Numerical calculations were necessary to determine a suitable constant because of the impact of the front surface heat losses.

For materials which are not thermally thick at the time of ignition the nature of the backing material or substrate can influence the measured value of the ignition time. In the Cone Calorimeter the substrate is a blanket of refractory ceramic fiber material, having a nominal density of 65 kg m^{-3}. In use, the material assumes a more compacted density of roughly 100 kg m^{-3}. Whenever possible, materials, whose thicknesses are less than the minimum suggested in the above formula, should be mounted on that substrate material over which they will actually be used. As a practical guide for testing unknown commercial samples it is desirable to specify that any specimens less than 6 mm thick should always be considered as needing to be tested over their in-use substrate.

Fabrics are a special case. Thin fabrics are sometimes used for constructing air-supported structures; these should be tested with an air space in back, simulating the usage conditions. A special holder has been constructed (Fig. 5) which allows the fabrics to be pulled taut and held above a dead air space.

Air flow rates

In the Cone Calorimeter, experiments with varying the exhaust hood air flow rates have been done with two types of materials, black PMMA and redwood. The results are listed in Table 1. The conclusion is that over the complete feasible air flow range, from zero (which, of course, would not be practical for operation), through the normal value[18] of 24 l s^{-1}, up to the apparatus maximum of 41 l s^{-1}, the effects of air flow rates on ignition times in the Cone Calorimeter are minor and do not consistently trend in one direction. Since the thermoplastic PMMA material and the charring redwood represent very different types of degradation behavior it is expected that these conclusions have some generality.

Edge effects

In the vertical specimen orientation, the specimen has to be restrained against falling out: thus, the vertical specimen holder incorporates a small lip covering 3 mm along the edges. In the horizontal orientation, no special

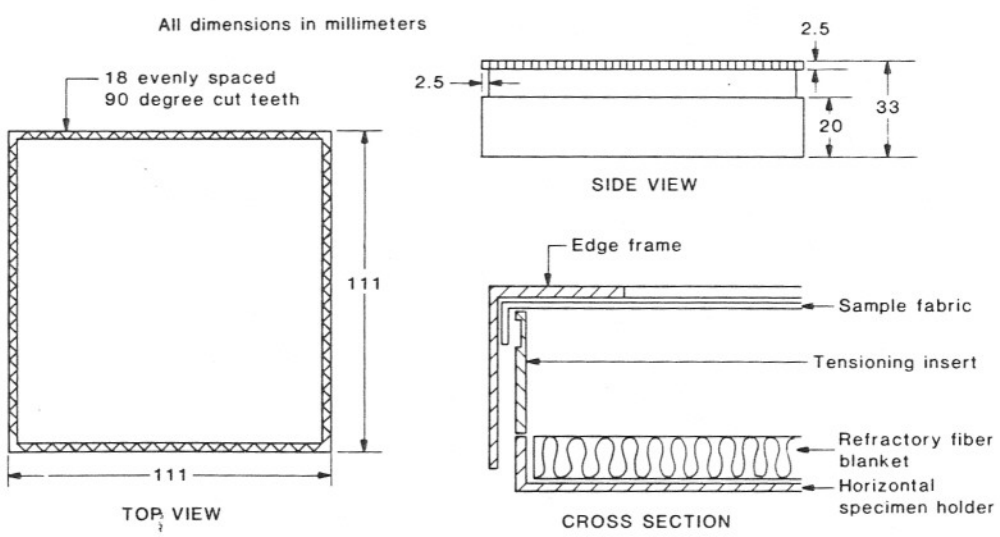

Figure 5. Holder as used for tests of air-supported assemblies.

Table 1. Effect of exhaust hood airflow on ignition times in the Cone Calorimeter[a]

Material	Thickness (mm)	Orientation	Fan setting	Ignition time[b] (s)
PMMA	13	Horizontal	No fan	71
PMMA	13	Horizontal	24 l s^{-1}	76
PMMA	13	Horizontal	41 l s^{-1}	67
PMMA	13	Vertical	No fan	86
PMMA	13	Vertical	24 l s^{-1}	84
PMMA	13	Vertical	41 l s^{-1}	77
Redwood	13	Horizontal	No fan	23
Redwood	13	Horizontal	24 l s^{-1}	24
Redwood	13	Horizontal	41 l s^{-1}	31
Redwood	13	Vertical	No fan	22
Redwood	13	Vertical	24 l s^{-1}	27
Redwood	13	Vertical	41 l s^{-1}	29

[a]At an irradiance of 35 kW m^{-2}.
[b]Typical ignition time scatter is on the order of $\pm 10\%$ ($1\ \sigma$; $N = 3$) in most tests, but high scatter is to be expected at irradiances near the minimum ignition flux for a given material.

measures need to be taken against falling out. Thus, for many types of specimens it is satisfactory to simply cover the edges and bottom with a piece of aluminum foil, leaving the top exposed in its entirety. For wood specimens, however, the ignition time can be substantially reduced by edge ignition. For pyrolysis occurring near the edge, the volatiles can flow more easily along the grain and then exit along the edge. When the specimen edge is covered with aluminum foil, stopping flush with the specimen face, the products are forced out through the narrow passage between the edge of the wood and the foil layer, thus causing a high fuel concentration at the surface allowing for earlier ignition. Once a flame is formed it can propagate rapidly to involve the whole surface. This problem is alleviated by using a stainless steel edge frame for the horizontal orientation, which, in the same way as the vertical holder, provides a 3 mm lip around the edge of the wood specimen face.

Table 2 gives the results for white pine specimens, 20 mm thick. In most cases the times to ignition is substantially shorter when no edge frame is used. The times to ignition in the vertical orientation are also much greater than in the horizontal. This effect will be discussed further below.

An additional specimen preparation technique that has been found of use for heat release rate testing is to cover the sides of a (horizontal) specimen with some slow-burning material. This allows the closest approach to an ideal burning manner—whereby the specimen surface would regress down uniformly. For PMMA this is possible by gluing cardboard strips, approximately 0.5 mm thick, to the edges. This might, in principle, affect the ignition times. Data in Table 3, however, suggest that the effect is negligible, at least for PMMA.

EXAMPLE TEST RESULTS

During the last few years, ignition data have been obtained from a large number of materials tested in the

Table 2. White pine ignition times, showing effect of edge conditions

Orientation	Ignition time (s) At irradiance (kW m^{-2}) 20	40	60	80
Horizontal				
no edge frame	25 ± 4.9[a]	4.7 ± 0.4	3.7 ± 1.0	1.9 ± 0.3
with edge frame	58 ± 6.3	5.1 ± 0.2	4.0 ± 1.0	3.0 ± 1.4
Vertical				
with edge frame	285 ± 150	16.4 ± 2.2	6.3 ± 0.9	3.5 ± 0.9

[a]$\pm 1\ \sigma$ for three tests.

Table 3. Effect of specimen thickness, orientation and edge conditions on ignition times for black PMMA

Operation	Specimen condition Thickness	Edge	Ignition time (s) Air irradiance (kW m^{-2}) 20	40	60
Vertical	25	Foil	208 ± 8.9[a]	42.6 ± 1.4	19.6 ± 1.9
Horizontal	25	Foil	180 ± 6.4	42.5 ± 4.7	18.6 ± 1.1
Horizontal	25	Cardboard		40.5 ± 4.1	19.3 ± 0.3
Horizontal	12	Foil		42.8 ± 8.9	21.5 ± 0.3

[a]$\pm 1\ \sigma$ for three tests.

Cone Calorimeter. For example, a series of flexible polyurethane foam materials have been studied in which four specimens of similar density and physical properties were tested: two were fire-retardant-treated formulations and two untreated ones. The data (Table 4) show rates of heat release which are very similar for all specimens. The ignition times, however, vary widely. At an irradiance of 25 kW m^{-2} the treated foams took three to eight times as long to ignite, compared with the untreated ones. When the irradiance was raised to 50 or 75 kW m^{-2}, however, these differences shrank to a factor of 2 or less. This is consistent with the observation that the typical fire retardants added to polyurethane foams can make them

Table 4. Comparative behavior of commercial flexible polyurethane foams

Irradiance (kW m^{-2})	Specimen A Untreated (25 kg m^{-3})	B Untreated (21 kg m^{-3})	C Treated: Br (25 kg m^{-3})	D Treated: Cl, P (28 kg m^{-3})
	Ignition time (s)			
25	5.5	5.2	39.2	15.0
50	3.3	3.3	4.1	4.1
75	1.3	N.A.	2.7	2.9
	Peak heat release rate (kW m^{-2})			
25	433	466	438	467
50	1059	876	1029	844
75	1773	1810	1429	1862
	60 s average heat release rate (kW m^{-2})			
25	278	272	276	230
50	443	470	456	428
75	501	646	545	561

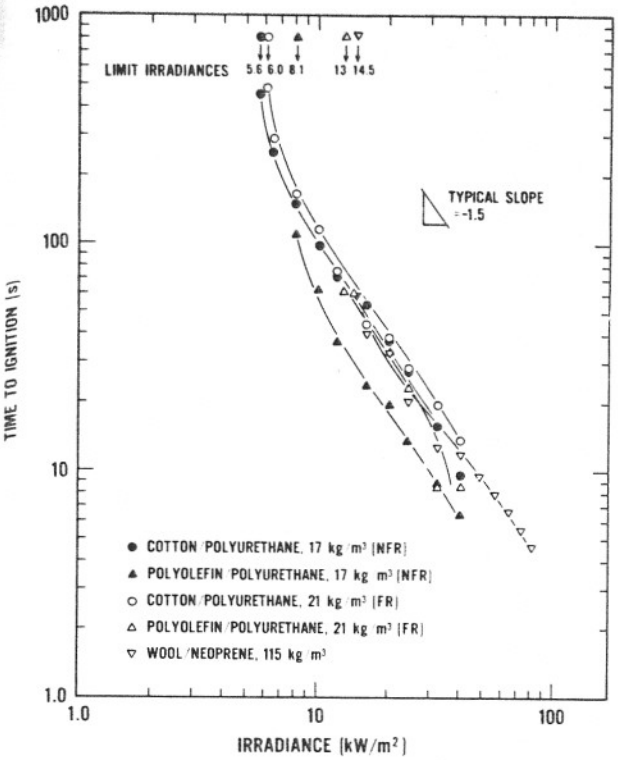

Figure 6. Ignitability curves for various fabric/foam assemblies.

resistant to very small ignition sources, but that the ignition and burning rate behavior is essentially unchanged when larger ignition sources are used.[24] While these conclusions are limited to the furniture foams tested, they are, nonetheless, indicative.

A more extensive investigation was made of foam/fabric composites, representing specimens taken from upholstered furniture. Figure 6 gives these results. The specimens studied encompassed the whole range of expected furniture fire behaviors—from a wool/neoprene specimen, typically showing the least flammable possible behavior of the commercial materials studied, to an unretarded (NFR) polyurethane foam, covered with a polyolefin fabric, showing among the most flammable behaviors.[24] Various fire retarded combinations (FR) are intermediate. A sufficient number of tests was made to characterize the complete ignitability curve, including the determination of the minimum irradiance required to achieve piloted ignition (limit irradiance). It is striking to note that the range of variations in ignitability for all these materials is only about a factor of 2 to 3. This small range of behavior is most likely due to the fact that the effective density of the test material is a dominant factor in determining its ignitability. For furniture applications, the range of acceptable densities is rather small.

Table 6. Comparative ignitability results for red oak and black PMMA, horizontal orientation

Irradiance ($kW m^{-2}$)	Ignition time (s) Red oak (20 mm, with edge frame)	Black PMMA (25 mm)
25	216	161
50	24.3	38
75	11.8	19.5
100	6.5	11.5

Tests have also been conducted on fabrics intended for air-supported buildings. These fabrics include an impermeable coating, which is typically polytetrafluoroethylene, silicone or PVC. These were tested using the holder illustrated in Fig. 5. Table 5 gives the results for two irradiances—$35 kW m^{-2}$, chosen to represent the typical peak heat fluxes from limited ignition sources,[24] and $75 kW m^{-2}$, which can represent heat fluxes in a flashed-over room. It can be seen that a satisfactory discrimination can be made between materials likely to ignite from a limited fire, and ones which would get involved only in the event of a fully flashed-over room fire.

Data have also been obtained on red oak, which has often been used as a standard calibration material. Table 6 gives these results over a wide range of irradiances: also given are the comparative results for black PMMA, which is being considered for use as a standard calibration material, representing simply pyrolyzing, non-melting plastics. Figure 7 shows plots of both sets of results on a log–log scale. It can be seen that, for irradiances of $50 kW m^{-2}$ and greater, a power law can be fit very well to the results for both materials. It shows a dependence of the ignition time on approximately the -1.9 power of the irradiances for red oak and the -1.7 power for PMMA.

COMPARISON WITH EMPIRICAL IGNITABILITY MODELS

PMMA is a convenient combustible to use in ignitability studies and has been examined by other investigators. The

Table 5. Ignitability of air-supported fabrics

Specimen	F/T	F/Sa	F/Sb	F/Sc	F/Sd	PE/PVC
Fabric type	Fiberglass	Fiberglass	Fiberglass	Fiberglass	Fiberglass	Polyethylene
Surface coating	PTFE	Silicone	Silicone	Silicone	Silicone	PVC
Mass ($kg m^{-2}$)	1300	450	1130	1080	1230	950
Time to ignition (s) at irrad.						
$= 35 kW m^{-2}$	N.I.[a]	N.I.	225	N.I.	N.I.	17
$75 kW m^{-2}$	44	12	19	19	28	7

[a]No ignition, for test exposure of 600 s.

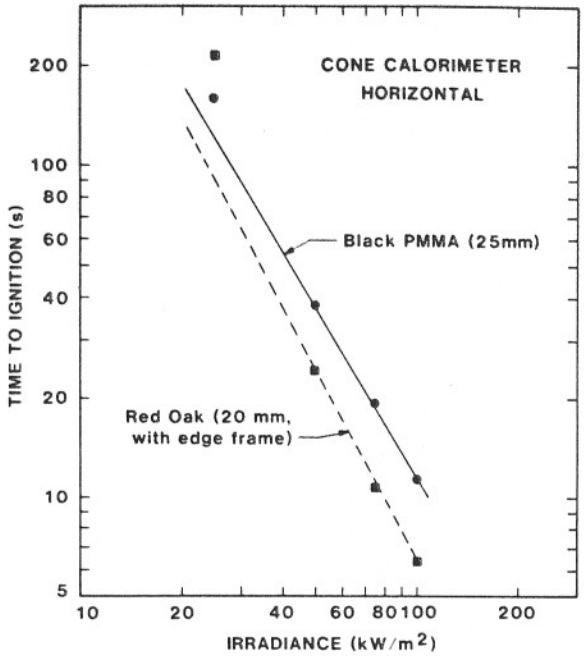

Figure 7. Ignitability curves for red oak and black PMMA. (Note that data only follow power-law relationships at high irradiances.)

most systematic work is that due to Hallman.[6] He investigated black PMMA in a thickness of 12.7 mm using an apparatus where a vertical specimen could be exposed to the irradiance of either benzene flames or tungsten lamps. His results are shown in Fig. 8, along with the Cone Calorimeter results shown in Fig. 7. First, it can be noted that since black PMMA has a radiant absorptance of 0.92 to 0.96, essentially independent of wavelength,[6] that source wavelength variations would not be expected to influence the results; this is borne out by the data of Fig. 8. Hallman's data show a power-law dependence, on average, of -2.0. It is quite striking that the agreement between the Cone Calorimeter and the Hallman data is so good, since the apparatuses are totally dissimilar.

Since PMMA is a material for which the thermophysical properties are known, it is possible to make a theoretical analysis. The simplest analysis would be based on the assumption that the solid is inert, semi-infinite in thickness, originally at a uniform temperature T_0, and then at time $t = 0$ it starts to be heated with a radiant flux $\dot{q}''$. The actual specimen pyrolysis is ignored, and, instead, it is assumed that ignition occurs when the specimen's exposed face reaches T_{ig}, its ignition temperature. The solution for the ignition time is then:[25]

$$t_{ig} = \frac{\pi}{4}(k\rho C)(T_{ig} - T_o)^2(\alpha\dot{q}'')^{-2} \tag{2}$$

For PMMA[26] it is appropriate to assume that $\alpha = 0.95$, $T_{ig} = 636\,\mathrm{K}$, and that $k\rho C$, the product of the thermal conductivity × density × heat capacity is $0.346\,\mathrm{s}\cdot(\mathrm{kW\,m^{-2}})^2\cdot\mathrm{K}^{-2}$. Substituting these values for PMMA gives

$$t_{ig} = 0.346 \times 10^5\,\dot{q}''^{-2}\ \ (\mathrm{s}) \tag{3}$$

The above solution would assume that there is no convection or reradiation. The former is a reasonable assumption at all except very low fluxes. The latter, however, is not reasonable. The reradiation term is proportional to $\alpha\sigma T_s^4$, where σ is the Stefan–Boltzmann constant and T_s is the specimen surface temperature. This starts out at T_o when $t = 0$ and goes to T_{ig} at $t = t_{ig}$. The reradiation term can be incorporated into the heat

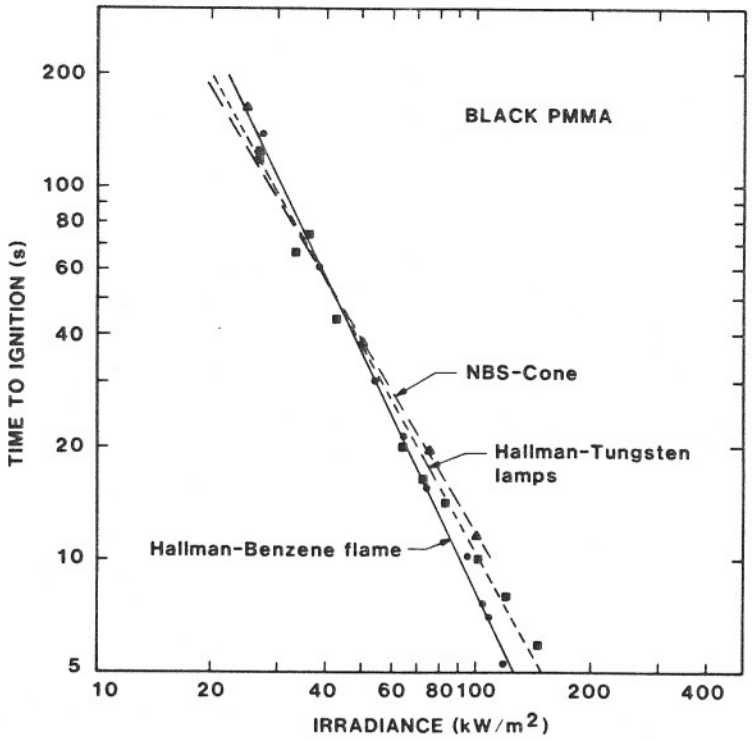

Figure 8. Comparison of Cone Calorimeter ignitability with Hallman's data.[6]

Table 7. Comparison of experimental PMMA results to simple predictive rules

Method	Ignition time (s) at irradiance ($kW m^{-2}$) 25	50	75	100
Measured in cone calorimeter	161	38	19.5	11.5
Measured by Hallman	145–58	35–7	15–18	8–10
Simple theory (Eqn. (4))	140	20.8	8.0	4.2
Hallman's correlation (Eqn. (6))	360	90	40	23

conduction equation; unfortunately, the equation then no longer possesses an analytical solution. For estimation, one can set T_s at the fixed value of T_{ig} for all times. The expression for PMMA then becomes

$$t_{ig} = 0.346 \times 10^5 (\dot{q}'' - 9.28)^{-2} \quad \text{(s)} \tag{4}$$

Hallman considered, instead, a number of somewhat more complex models, but did not use them when he found poor agreement with his data. For practical calculations use he proposed an empirical relationship, based on fitting all of his plastics data, of which PMMA was only a small portion. His recommendation, in the same units as above, is that

$$t_{ig} = 1035 \frac{(T_{ig} - T_o)^{1.04} (k\rho C)^{0.75}}{(\alpha \dot{q}'')^2} \tag{5}$$

When evaluated for PMMA using the same properties as above, this gives

$$t_{ig} = 2.22 \times 10^5 \, \dot{q}''^{-2} \quad \text{(s)} \tag{6}$$

Both of the above relationship are evaluated in Table 7. Neither is particularly good at representing the experimental data closely. It is interesting to note that Hallman's expression (Eqn. (6)) does not represent his data any better than does Eqn. (4). This is presumed to be because his correlation was optimized as the best fit for all of the plastics tested, and not just for PMMA. To achieve better predictive results, it is clear that a more advanced model of ignition is needed.

COMPARISON WITH DETAILED NUMERICAL MODELS: DOUGLAS FIR

Ignitability is but one of the responses of a material to a fire exposure. A numerical model for the total fire response of wood was developed by Parker.[27]

This model includes heat release rate, surface temperatures and mass loss rate predictions. The heat release rate is determined by intergrating the product of the instantaneous mass loss rate and the instantaneous heat of combustion at each depth over the thickness of the exposed wood slab. When the calculated heat release rate reaches the minimum required to maintain a flame on the surface, ignition is assumed to occur. Prior to that time the heat release rate is set equal to zero. This minimum flux is taken to be $30 \, kW m^{-2}$. The model takes into account the degree of char, the char shrinkage and the variation in thermal conductivity, specific heat and density with the temperature. It also accounts for thermal radiation and convective cooling from the front surface. The surface is assumed to be black for both absorption and emission of thermal radiation. The model was initially checked out with Douglas fir particle board. In this case it was assumed that the kinetics were governed by a single first-order reaction. The activation energy, frequency factor, heat of combustion of the volatiles, char contraction factors and the thermal conductivity were all experimentally determined on specimens taken from the same batch of material as those tested in the Cone Calorimeter. The calculated and measured heat rates have been examined in detail earlier.[27]

The ignition times of Douglas fir particle board were measured in the Cone Calorimeter at incident radiant heat fluxes of 25, 50, 75 and $100 \, kW m^{-2}$ using vertically oriented specimens. The calculated ignition times were taken to be equal to the times of appearance of a calculated heat release rate of $30 \, kW m^{-2}$. These times are compared in Table 8. Since the convective cooling term in the model is based on steady state laminar free convection, while the ignition process occurs before a steady state has been established, calculations are also included for the case where the convective cooling is assumed to be equal to zero. Thermal radiation from the surface is

Table 8. Measured and computed ignition times for Douglas fir particle board

Irradiance ($kW m^{-2}$)	Ignition time in Cone Calorimeter (s)	Calculated ignition times (s)[a]: Based on $\dot{m}'' = 2.5 \, g m^{-2}$ w/o conv. cooling	Based on $\dot{m}'' = 2.5 \, g m^{-2}$ with conv. cooling	Based on $\dot{q}'' = 30 \, kW m^{-2}$ w/o conv. cooling	Based on $\dot{q}'' = 30 \, kW m^{-2}$ with conv. cooling	Based on $T_{ig} = 380°C$ w/o conv. cooling	Based on $T_{ig} = 380°C$ with conv. cooling
25	100	143 (375°C)	172 (372°C)	168 (388°C)	203 (385°C)	153	189
50	25	30.4 (396°C)	33.0 (395°C)	36.5 (415°C)	39.4 (413°C)	25.7	28.2
75	12	13.6 (409°C)	14.4 (409°C)	16.4 (430°C)	17.4 (429°C)	10.2	10.9
100	8.5	7.7 (418°C)	8.0 (417°C)	9.4 (441°C)	9.8 (440°C)	5.4	5.6

[a]Computed surface temperatures at ignition are shown in parentheses.

included in both cases. The calculated temperature at the calculated time to ignition is included for all of the entries in the table.

In a classic paper by Bamford *et al.*[28] in 1945 it was reported that a minimum mass flux of $2.5\,g\,m^{-2}$ was required to sustain flaming combustion of wood. This ignition criterion was applied to the calculated mass loss rates to obtain another set of ignition times in Table 8, also with and without convective cooling at the surface.

Quintiere and Harkleroad[29] deduced an ignition temperature of 380°C for Douglas fir particle board. The times at which the calculated front surface temperature reaches this 380°C is also included in Table 8 with and without convective cooling at the surface.

Table 8 shows that the predictions from the model are encouraging. The minimum mass flux criterion along with the assumption of no convective cooling from the surface is slightly better than the others in accounting for the experimental values. However, it would be premature at this point to argue that the difference is significant. The model is quite good at higher fluxes, but all of the criteria predict a significantly longer time to ignition than was observed at an incident flux of $25\,kW\,m^{-2}$. Although the reason for this disagreement is not understood, some possibilities to explore include: (1) oxidative pyrolysis at the surface which is exothermic and more rapid; (2) local effects due to variation in properties along the surface associated with the annual ring structure, fissure development, etc.; and (3) inadequate data on the thermal conductivity of char at high temperature. The model assumes no reaction with oxygen at the surface and assumes the heat transfer to be one-dimensional. Measurements of the thermal conductivity could only be carried out up to 270°C. Beyond that point the data were extrapolated. The assumption of a single first-order reaction may not be adequate. It should also be noted that lot-to-lot variations among wood products can have a strong effect on ignitability measurements. Quintiere and Harkleroad,[29] studying Douglas fir particle board from a different lot, found ignition times of 150 s at $25\,kW\,m^{-2}$ and 30 s at $50\,kW\,m^{-2}$.

The model assumes average properties and heat fluxes over any plane parallel to the surface. While this is necessary to predict the average heat release rates which are actually measured in the Cone Calorimeter, points of locally high heat fluxes or locally low density are where ignition is likely to be initiated. In order to provide some indication of the magnitude of these effects the ignition times were calculated for a 10% higher flux and for a 20% lower density. Parts of the surface may pass through the lower density spring growth while other parts are passing through the more dense summer growth. Increasing the flux from 25 to $27.5\,kW\,m^{-2}$ dropped the calculated ignition time from 143 to 114 s. Dropping the density from 709 to $567\,kg\,m^{-3}$, while maintaining the incident radiant flux at $25\,kW\,m^{-2}$, reduced the ignition time from 143 to 125 s. These calculations were based on the minimum mass loss criterion assuming no convective losses from the surface. For heat fluxes approaching the critical radiant flux for ignition of the material, the ignition times become more sensitive to these variations in heat flux and density and also to any uncertainty in the actual value of the heat flux which may have an error of up to 5%. These effects provide possible explanations for the poor agreement at $25\,kW\,m^{-2}$.

ADDITIONAL SPECIMEN EFFECTS

Specimen orientation

This is a potentially important effect. It should not be considered an apparatus dependency *per se*, since various specimen orientations can occur in real fires, and it is desirable to represent them in a test. Thus, the Cone Calorimeter has been designed with two orientations, vertical, and face-up horizontal to represent at least the major possible configurations. Tables 1–3 show that orientation makes little difference for PMMA and for redwood. For white pine, however, the horizontal orientation ignition times were consistently shorter than the vertical ones. This effect was also noted by Atreya *et al.* for mahogany specimens.[30] Kashiwagi[31] has also studied orientation effects, although only in an auto-ignition mode. He found that, for that mode, the horizontal orientation ignition times were shorter than the vertical ones for both PMMA and red oak specimens. The interpretation of the results for wood specimens is especially difficult to provide, partly because the ignition of wood can be influenced substantially by its surface roughness conditions, and the test specimens are normally not characterized for this property.

Additional comparative data have been obtained on a series on aircraft cabin wall panel materials.[32] These types of specimens are difficult to ignite and might be expected to show substantial variations. Table 9 shows the results. The variation do not appear to be significant, except that at the highest tested irradiance, $75\,kW\,m^{-2}$, ignition is marginally slower in the vertical orientation.

Finally, comparative orientation data from an inter-

Table 9. Effect of irradiance and specimen orientation on ignition times for aircraft panels

		Ignition time (s) Specimen				
Irradiance ($kW\,m^{-2}$)	Orientation	Epoxy/ fiberglass	Phenolic/ fiberglass	Epoxy/ Kevlar	Phenolic/ Kevlar	Phenolic/ Graphite
25	Horizontal	31.6	27.9	33.0	N.I.[a]	N.I.
25	Vertical	29.8	N.I.	36.1	N.I.	N.I.
50	Horizontal	7.8	8.0	8.8	8.0	12.2
50	Vertical	7.9	8.0	6.5	8.5	9.5
75	Horizontal	4.8	4.3	3.9	4.5	5.5
75	Vertical	5.8	5.5	5.5	5.5	5.5

[a]N.I. = no ignition.

Table 10. Ignition of building materials determined by four test methods[34]

Specimen	Thick. (mm)	Mass ($kg\,m^{-3}$)	Mass ($kg\,m^{-2}$)	Time to ignition (s) for $50\,kW\,m^{-2}$ irrad. Cone Calor. Hor.	Cone Calor. Vert.	ISO[c] Hor.	OSU[d] Vert.	STFI[e] Vert.
Insulating fiber board	13	250		1	5	12	5	10
Medium-density fiberboard	12	600		15	20	22	15	25
Particle board	10	750		15	25	30	20	25
Gypsum plaster board	13	700		25	23	34	18	30
PVC wall covering on gypsum board	0.7[a]		240	1	10	9	10	8
Paper wall covering on gypsum board	0.6[a]		200	5	10	14	8	20
Textile wall covering on gypsum board	0.7[a]		370	8	15	22	15	15
Textile wall covering on mineral wool	50	100		10	2	13	5	12
Melamine faced particle board	1.2[a]	810		100	145	26	—[f]	—[f]
Polystyrene foam	50	20		25	83	2	20	105
Rigid polyurethane foam	30	30		1	3	2	8	3
Wood panel, spruce	11	530		10	15	18	10	15
Paper wall covering on particle board	0.6[b]		200	20	24	19	15	25

[a]Over 13 mm substrate.
[b]Over 10.5 mm substrate.
[c]International Organization for Standardization test.[15]
[d]Ohio State University test.[11]
[e]Swedish Forest Products Research Laboratory test.[34]
[f]Poorly defined time to ignition.

laboratory comparison of building materials (discussed below) are also shown in Table 10. In this series, the ignition times for the horizontal orientation, with one exception, are shorter than in the vertical orientation. This may suggest that, in general, it is somewhat easier to achieve the requisite lower flammability limit above a burning pool than it is in the thinner, higher velocity boundary layer which results in the vertical orientation. On the other hand, the convective cooling of the horizontal specimens is less than it is for the vertical specimens, so that the same surface temperature is reached earlier for the horizontal specimens.

Relation to heat release

Not much exploration has been done on the relationship between time to ignition and the rate of heat release. In general, it can be expected that these are not highly correlated properties. In at least one situation, however, a significant correlation can be seen. White pine specimens were tested for ignitability and rate of heat release. The data in Table 11 show that at higher irradiances ignition time data exhibit little scatter, and there is no correlation to heat release rate. At an irradiance of $20\,kW\,m^{-2}$, however, the ignition is very slow and there is a large amount of sample-to-sample variation. Under those circumstances an inverse relationship can be seen between the ignition time and the peak value of the heat release rate. The correlation in Table 11 may possibly be explained on the basis of a delayed ignition allowing a larger accumulation of combustible vapors, which, when ignited, give rise to a larger peak heat release rate (wood materials specimens generally show the peak rate of heat release just shortly after ignition). In a general case, for natural products, ignition and heat release rate variability can be attributed to specimen density variations.[33] In the present series, however, the specimen density variations were less than 3% among the specimens.

Table 11. Effect of random variations of ignition time on peak heat release rate for single specimens

Irradiance = $20\,kW\,m^{-2}$ Ignition time[a] (s)	Peak $\dot{q}''$ ($kW\,m^{-2}$)	Irradiance = $40\,kW\,m^{-2}$ Ignition time[a] (s)	Peak $\dot{q}''$ ($kW\,m^{-2}$)
145	196	13.9	220
266	135	17.4	241
444	96	18.0	223

[a]For 20 mm thick white pine specimens, vertical orientation.

COMPARISON WITH OTHER TEST METHODS

A series of materials was produced by the Swedish National Testing Laboratories (Statens Provningsanstalt) for use in test standardization. Tests were conducted at NBS in the Cone Calorimeter. Östman *et al.*[34] provided data taken in three other ignition apparatuses: the ISO ignitability test, the OSU apparatus and a radiant panel test devised by the STFI (Swedish Forest Products Research Laboratory). Some of the relevant test para-

meters were:

	Cone Calor.	*ISO*	*OSU*	*STFI*
Specimen size (mm)	100 × 100	165 × 165	150 × 150	150 × 150
Orientation	H, V	H	V	V
Air flow ($1\,s^{-1}$)	24	N.A.	11	20
Pilot	Electric	Dipping non-imping-ing	Gas, non-imping-ing	Gas, non-imping-ing

The results are shown in Table 10. It is clear that ignition times, as measured in the Cone Calorimeter, are in most cases shorter in the horizontal orientation than in the vertical. In general, when times to ignition are ordered, the following approximate trend may be seen:

Longest	STFI—vertical
	ISO—horizontal
	Cone—vertical
	OSU—vertical
Shortest	Cone—horizontal

Generally there is a broad range of agreement between the different methods for most of the materials tested, although there are some apparent outliers. However, the differences between the methods may not necessarily be statistically significant: this should be addressed in a future study. Most of the dense materials, such as particle board, medium density fiberbroad, spruce wood, gypsum board and paper wall covering on particle board, show ignition time results which do not exceed more than a range of 2:1 among the test methods. It is interesting to note that these are all cellulosic products. The remaining specimens, including both the foams, show one or more apparent outliers. This is not unexpected, since foam specimens can melt, shrink or recede from the surface prior to ignition. These types of behavior are not typically encountered with cellulosic specimens. Melamine-composite specimens are a special case, since they have a tendency to explosively delaminate instead of igniting uniformly over the surface. Thus characterizing such specimens with an ignitability test may not be appropriate.

CONCLUSIONS

The Cone Calorimeter allows the collection of radiant ignition data over a wide controlled range of irradiances. It is operable in two orientations, the choice of orientation being determined by the product application category. The piloting mechanism has been developed in response to known difficulties of other apparatuses and functions reliably. Radiant ignition data at higher irradiances ($\geqslant 50\,kW\,m^{-2}$) can be correlated by power law functions; at lower irradiances the ignition times are generally longer than would be predicted.

More detailed modeling of the thermal degradation of a particular specimen type is required for improved model predictions. When data are compared with othere ignitability test apparatuses it is seen that agreement among various test methods is better for higher-density products than for plastic foams and other low-density materials.

Acknowledgements

W. H. Twilley and G. L. King conducted the laboratory experiments and reduced the test data. This paper is a contribution of the National Bureau of Standards and is not subject to copyright.

NOTES

[a]Certain commercial equipment, instruments or materials are identified in this paper in order to adequately specify the experimental procedure. In no case does such identification imply recommendation or endorsement by the National Bureau of Standards, nor does it imply that the material or equipment identified is necessarily the best available for the purpose.

REFERENCES

1. C. R. Brown, The determination of the ignition temperatures of solid materials. D.Sc. dissertation, The Catholic University of America, Washington, DC (1934).
2. N. P. Setchkin, A method and apparatus for determining the ignition characteristics of plastics. *J. of Research of The National Bureau of Standards* **43**, 591–608 (1949).
3. *Fire Test Standards*, Ist edn, American Society for Testing and Materials, Philadelphia, PA (1982).
4. W. J. Parker, The development of a test for ease of ignition by flame impingement. *Report 10495*, (US) Nat. Bur. Stand. (1971).
5. J. deRis, Fire radiation. In *17th Symp. (Intl) on Comb.*, The Combustion Institute, Pittsburgh, PA (1978).
6. J. R. Hallman, Ignition characteristics of plastics and rubber. Ph.D. dissertation, University of Oklahoma, Norman (1971).
7. B. Hägglund and L.-E. Persson, The heat radiation from petroleum fires. *FOA Rapport C 20126-D6(A3)*, Försvarets Forskningsanstalt, Stockholm (1976).
8. V. Babrauskas, Estimating large pool fire burning rates. *Fire Technology* **19**, 251–61 (1983).
9. J. J. Comeford, The spectral distribution of radiant energy of a gas-fired radiant panel and some diffusion flames. *Comb. and Flame* **18**, 125–32 (1972).
10. A. Tewarson, Physico-chemical and combustion/pyrolysis properties of polymeric materials. *(NBS-GCR-80-295)*, (US) Nat. Bur. Stand. (1980).
11. Standard test method for heat and visible smoke release rates for materials and products, *ASTM E906*, American Society for Testing and Materials, Philadelphia, PA.
12. D. L. Simms, Ignition of cellulosic materials by radiation. *Comb. and Flame* **4**, 293–300 (1960).
13. D. L. Simms, Damage to cellulosic solids by thermal radiation. *Comb. and Flame* **6**, 303–18 (1962).
14. N. J. Alvarez and S. B. Martin, Mechanisms of ignition of thermally irradiated cellulose. In 13th Symp. (Intl) on Comb., The Combustion Institute, Pittsburgh, PA (1970).

15. Fire tests—Reaction to Fire—Ignitability of building products. Draft International Standard, ISO/DIS 5657, International Organization for Standardization (1985).
16. V. Babrauskas, Development of the Cone Calorimeter—a bench-scale heat release rate apparatus based on oxygen consumption. *Fire and Materials* **8**, 81–95 (1984).
17. V. Babrauskas, Construction drawings for the Cone Calorimeter. Center for Fire Research, (US) Nat. Bur. Stand. (1985).
18. Proposed test method for heat and smoke release rates for materials and products using an oxygen consumption calorimeter (E5 Proposal P-190). *Annual Book of ASTM Standards*, Vol. 04.07, American Society for Testing and Materials (Nov. 1986).
19. V. Babrauskas, Combustion of mattresses exposed to flaming ignition sources. Part II. Bench-scale tests and recommended standard test (NBSIR 80-2186). (US) Nat. Bur. Stand. (1980).
20. J. P. Tordella and W. H. Twilley, Development of a calorimeter for simultaneously measuring heat release and mass loss rates (NBSIR 83-2708). (US) Nat. Bur. Stand. (1983).
21. R. Nussbaum and B. Östman Larger specimens for RHR tests in the Cone Calorimeter. *(ISO TC92/SC1/WG5 N. 59)*, Träteknik Centrum, Institute för Träteknisk Forskning, Stockholm (1985).
22. W. D. Weatherford, Jr and D. M. Sheppard, Basic studies of the mechanism of ignition of cellulosic materials. *Tenth Symp. (Intl) on Combustion*, pp. 897–910. The Combustion Institute, Pittsburgh, PA (1965).
23. H. R. Wesson, J. R. Welker and C. M. Sliepcevich, The piloted ignition of wood by thermal radiation. *Comb. and Flame* **16**, 303–10 (1971).
24. V. Babrauskas and J. F. Krasny, *Fire Behavior of Upholstered Furniture*, NBS Monograph 173 (US) Nat. Bur. Stand. (1985).
25. H. S. Carslaw and J. C. Jaeger, *Conduction of Heat in Solids*, The Clarendon Press, Oxford (1959).
26. A. K. Modak and P. A. Croce, Plastic pool fires. *Comb. and Flame* **30**, 251–65 (1977).
27. W. J. Parker, Development of a model for the heat release rate of wood—a status report. *(NBSIR 85-3163)*, (US) Nat. Bur. Stand. (1985).
28. C. H. Bamford, J. Crank and D. H. Malan, The combustion of wood. Part I. *Proc. Cambridge Phil. Soc.* **42**, 166 (1946).
29. J. Q. Quintiere and M. Harkleroad, New concepts for measuring flame spread properties. In *Fire Safety: Science and Engineering* (ASTM STP 882), T. Z. Harmathy (ed.), American Society for Testing and Materials, Philadelphia, PA (1985).
30. A. Atreya, C. Carpentier and M. Harkleroad, Effect of sample orientation on piloted ignition and flame spread. In *Fire Safety Science—Proceedings of the First International Symposium*, C. E. Grant and P. J. Pagni (eds), Hemisphere Publ., Washington, DC (1986).
31. K. Kashiwagi, Effects of sample orientation on radiative ignition. *Comb. and Flame* **44**, 223–45 (1982).
32. J. G. Quintiere, V. Babrauskas, L. Cooper, M. Harkleroad, K. Steckler and A. Tewarson, The role of aircraft panel materials in cabin fires and their properties. *(DOT/FAA/CT-84/30)*, Federal Aviation Administration, Atlantic City (1985).
33. D. L. Chamberlain, Heat release rate properties of wood based materials. *(NBSIR 82-2597)*, (US) Nat. Bur. Stand. (1983).
34. B. Östman, I. G. Svensson and J. Blomqvist, Comparison of three test methods for measuring rate of heat release. *Fire and Materials* **9**, 176–84 (1985).