NBSIR 81-2386

Airflow Extinguishment of Burning Apparel Fabrics

Man-Made Fiber Producers Association, Inc.
Washington, DC 20036

and

U.S. DEPARTMENT OF COMMERCE
National Bureau of Standards
National Engineering Laboratory
Center for Fire Research
Washington, DC 20234

October 1981

Final Report

Issued December 1981

U.S. DEPARTMENT OF COMMERCE

NATIONAL BUREAU OF STANDARDS

NBSIR 81-2386

AIRFLOW EXTINGUISHMENT OF BURNING APPAREL FABRICS

B. B. Hibbard
Research Associate

Man-Made Fiber Producers Association, Inc.
Washington, DC 20036

and

J. F. Krasny, E. Braun, and R. D. Peacock

U.S. DEPARTMENT OF COMMERCE
National Bureau of Standards
National Engineering Laboratory
Center for Fire Research
Washington, DC 20234

October 1981

Final Report

Issued December 1981

U.S. DEPARTMENT OF COMMERCE, Malcolm Baldrige, *Secretary*
NATIONAL BUREAU OF STANDARDS, Ernest Ambler, *Director*

TABLE OF CONTENTS

	Page
LIST OF FIGURES	iv
LIST OF TABLES	iv
Abstract	1
1. INTRODUCTION	2
1.1 Federal Regulatory Actions	2
1.2 Potential Burn Injury	3
1.3 Ease of Extinguishment	4
2. EXPERIMENTAL	9
2.1 Description of AFMA	9
2.2 Calibration of AFMA Sensors	16
2.3 Description of Airflow Generating Apparatus	17
2.4 Data Acquisition and Computation	17
2.5 Fabrics	20
2.6 Airflow Simulation Procedure	20
3. RESULTS AND DISCUSSION	21
3.1 Regular AFMA - Stationary Mode	21
3.2 Three-Inch Extension Apparatus for AFMA	21
3.3 Influence of Fabric Weight Upon Airflow Extinguishment	28
3.4 Fabric Classification by Ease of Airflow Extinguishment	31
4. CONCLUSIONS	31
5. REFERENCES	33

LIST OF FIGURES

		Page
Figure 1.	Apparel Fire Modeling Apparatus (AFMA)	10
Figure 2.	Apparel Fire Modeling Apparatus (AFMA) (Details)	11
Figure 3.	Three-Inch Extension Apparatus	14
Figure 4.	Airflow Generating Apparatus	18
Figure 5.	Burn Injury Area vs Airflow Rate	22
Figure 6.	Maximum Total Heat vs Airflow Rate (Regular AFMA)	23
Figure 7.	Burn Injury Area vs Airflow Rate	25
Figure 8.	Maximum Total Heat vs Airflow Rate	26
Figure 9.	Time to Extinguishment vs Airflow Rate	27
Figure 10.	Total Heat and Burn Injury Area vs Fabric Weight	30

LIST OF TABLES

Table 1.	Airflow Extinguishment Data - Regular AFMA	13
Table 2-1.	Airflow Extinguishment Data - Three-Inch Extension Apparatus - AFMA	15A
Table 2-2.	Airflow Extinguishment Data - Three-Inch Extension Apparatus - AFMA	15B
Table 3.	Fabric Classification by Ease of Airflow Extinguishment	29

AIRFLOW EXTINGUISHMENT OF BURNING APPAREL FABRICS

B. B. Hibbard[1], J. F. Krasny, E. Braun, and R. D. Peacock

Abstract

The heat output of a burning fabric subjected to a frontal airflow at various velocities was measured behind the burning face of the fabric. Twelve different commercial fabrics were evaluated in this manner on the Apparel Fire Modeling Apparatus (AFMA). When the fabric burned to a given heat output, the selected level of airflow was applied to the face of the burning fabric in an attempt to extinguish the flame. Burn injury area, maximum total heat, and time to extinguishment were determined from AFMA data.

The burning fabrics quickly extinguished with an airflow of 213 meters per minute (8 mph) or less in all but one of the fabrics studied. The one exception was an 85/15 cotton/polyester double faced terry cloth

[1]This work was done while Dr. Hibbard served as the NBS Research Associate representing the Man-Made Fiber Producers Association, Incorporated, during the period 1977-1979. Dr. Hibbard's current address is the Badische Corporation, Williamsburg, Virginia.

fabric where this and higher airflows only increased the rate of burning. For the eight cellulose containing fabrics investigated the maximum total heat and burn injury area increased as fabric weight increased. For most of the fabrics studied the total heat transferred to the simulated body generally decreased with increasing air velocity. Fabrics were classified into three groups based upon these airflow extinguishment parameters.

Key words: Airflow; burn (injuries); extinguishment; fabrics; fire modeling; flammability; textiles.

1. INTRODUCTION

1.1 Federal Regulatory Actions

The potential hazard and possible burn injury which might result from general wearing apparel fires have been studied over the past several years. Possibly the earliest federal regulatory action taken to reduce this potential for burn injury was the adoption of the Commercial Standard 191-53 test method and regulation which were effective in eliminating some of the most hazardous fabrics. CS 191-53 (Revised) is currently in use [1][2].

Work at the National Bureau of Standards (NBS) and elsewhere over the past few years has been directed towards the investigation of the flammability of general wearing apparel. Support for this effort was given by the U.S. Consumer Product Safety Commission

[2]Numbers in brackets refer to the references at the end of this report.

(CPSC) which was assigned responsibility for the Flammable Fabrics Act on May 14, 1973. A draft proposal by NBS entitled "Proposed Standard For the Flammability of General Wearing Apparel" [2] was submitted to CPSC in February, 1976. This proposal was further supported by Braun, E., et al. in a detailed back-up report [3] which discusses the reasons for the choices of experimental arrangement for the flammability test and the choice of pass-fail criteria. To date CPSC has not proposed a new regulation for general wearing apparel.

However, specific regulatory actions have been taken with respect to children's sleepwear in DOC FF 3-71 [4] and DOC FF 5-74 [5] as amended [6]. The amendments delete the requirements for residual flame time of melt drip (a parameter of self-extinguishment) in DOC FF 3-71 and revise the method of testing trim in both standards. CPSC issued these amendments to reduce the necessity for the use of chemical flame retardants (FR) on fiber and fabrics used in children's sleepwear. Changes in the residual flame time requirements eliminated the requirement that the melt drip from certain burning fabrics self-extinguish within 10 seconds.

1.2 Potential Burn Injury

Potential burn injury from apparel fabric fires was the concern of this work. More specifically this work was concerned with the extent of second or third degree burns to the body. Methods of determining second and third degree burns have been reported by Derksen [7], Stoll [8,9], Chianta [10], Evans [11], and others.

The potential of a burning garment to cause burn injury to the human body is a complex function influenced by the following:

1) skin characteristics

2) ease of ignition of fabric

3) rate and direction of flame spread

4) weight and composition of combustibles

5) special garment configurations (i.e., tight or loose)

6) ease of extinguishment

7) human reaction.

1.3 Ease of Extinguishment

In this study we were primarily concerned with the ease of extinguishment of single layered, unseamed fabrics. In particular, we were to measure the frontal airflow extinguishment of fires of a variety of fabrics.

Several papers have been published on the topic of ease and extinguishment of apparel fabrics. As early as December 1973, Mayer [12] reported on his work to measure the relative hazard of fabrics based on flame spread. He further noted that "no effort to determine ease of ignition

and ease of extinguishment has been made. Any future work designed to characterize the potential hazard of flammable fabrics must take these factors into consideration".

In 1973, Buchbinder [13] reported that human behavioral patterns in 1,126 apparel fire accident cases showed that "running" was the most frequent first action after apparel ignition followed in order by "beating flames with hands" and "trying to remove clothing". Other actions such as "wrapping in a rug" or "rolling" were noted. Often more than one extinguishing method was used. Removing the burning clothing was apparently the most successful method in keeping the injury small, while the often recommended wrapping in a rug or similar heavy fabric resulted in larger injuries, perhaps because the heat is confined near the body.

In 1974, Bauer [14] suggested three devices which might be adapted to simulate three apparel fire extinguishing methods suggested by known human responses. He chose (possibly tongue in cheek) to call them: 1) "Pat-It-Out", 2) "Blow-It-Out", and 3) "Roll-It-Out". Pat-it-out and roll-it-out would essentially deprive the garment of oxygen by bringing it in contact with surfaces (which also function as heat sinks) on both sides. It has, however, also been noted that many fabrics stop burning upon one-sided contact with a simulated body or living skins [15,16,17]. These findings suggested various approaches to designs of laboratory tests for extinguishment, taking into consideration single- and two-sided contact of fabrics with surfaces, the heat sink and oxygen exclusion effects, and the effect of increased airflow, as in running. The mechanistic and material aspects of extinguishment of burning textiles are analyzed in the first of a series of papers from the University of Maryland [18].

In June 1974, Krasny [19] reported on initial efforts to obtain laboratory data on the relative extinguishability, by slapping, of five cotton fabrics and four cotton/polyester fabrics. A simple apparatus was designed to simulate extinction of burning fabrics by beating or slapping the flames. Initial results indicated that the time to extinguish a given area of burning cotton fabric by this method was directly related to the fabric weight. Comparable polyester/cotton fabrics took more time to be extinguished. Work by Fairall at the University of Maryland only partially agreed with these findings, perhaps because she used quite different slapping surfaces [20].

MIT has worked with stationary Transite extinguishing surfaces and has varied the geometry of the surface as well as the fabric-surface distance [21]. They found that some fabrics extinguish even when the fabric-surface distance is as much as 0.6 cm. It was found that heavier cotton fabrics were more difficult to extinguish than lighter cotton fabrics; this agrees with the earlier NBS findings using a different experimental approach. A wool fabric of weight similar to the heavier cotton fabric was found to be much more easily extinguished, even though the rate of flame spread for both fabrics was similar.

Investigators at the University of Maryland attempted to separate the contributions of limiting the oxygen supply to the flames and of the proximity of a heat sink [22]. They investigated the burning rate and the rate of heat flux from the burning fabric at various oxygen concentrations. The study used the TRI fabric analyzer with modifications to place heat sinks at various distances from the burning fabrics. The linear burning rate was found to be dependent on fiber type and fabric

construction, while the heat flux was basically fiber dependent. As expected, the burning rate increased with increasing oxygen concentration. It also decreased with decreasing distance from the heat sink, while raising the temperature of the heat sink from 37 to 110°C had no measurable effect.

Zawistowski, et al. [16] and Meierhoefer, et al. [17] measured heat transfer from fabrics which were initially permitted to burn freely but at some time after ignition were brought in contact with a simulated body. Many fabrics so tested extinguished upon contact with the body, called the Apparel Fire Modeling Apparatus (AFMA). It is described under 2.1, below. It contains 54 heat sensors, and the heat transferred from the burning specimen was measured periodically. Total heat transferred to the AFMA was found to be fiber dependent, with thermoplastic, FR, and wool fabrics showing the least heat transfer. Fabrics which made poor contact with the AFMA (e.g., terry cloth and fabrics which seemed to shrink away from the AFMA surface such as some acetates and acrylics) resulted in relatively high heat transfer. (Meierhoefer measured the heat transfer from 58 apparel fabrics which had been choosen by the American Textile Manufacturers Institute (ATMI) for the Cooperative Apparel Fire Accident Flammability Program, and which were also evaluated by approximately 16 other accident simulation and flammability testing methods in 15 laboratories [23,24,25], so that the AFMA results can be compared with those of other evaluation methods.) Miles used the AFMA to evaluate cellulosic fabrics FR treated to levels which did not allow them to pass the Children's Sleepwear test but which still did not seem to burn as vigorously as untreated fabrics (borderline fabrics) [26,27]. Those fabrics transferred little heat to the AFMA.

Several workers investigated the effect of air currents on extinguishment of burning fabrics. The above mentioned borderline fabrics were used in such experiments [27] and again transferred little heat and extinguished readily. Le Blanc [28] reported experiments with burning cotton and polyester/cotton fabrics which were moved at various speeds. The potential burn injury increased with decreasing rate of movement, and with increasing time between ignition and start of movement. Le Blanc [29] also reported on methods which extinguished burning fabrics in various ways, including dropping, jarring, touching, and blowing on them. Again, certain borderline cellulosic fabrics (which had been treated with levels of flame retardants somewhat less than that needed to make them self-extinguishing in vertical tests) were readily extinguished by these methods. Finally, Pressley [30] mentions a demonstration of airflow extinguishment by moving pieces of burning fabric in the air.

Potthof, et al. [31] investigated the air patterns behind a running person and the heat evolution from burning fabrics exposed to air streams of varying velocity. Behind a running person, the airflow can recirculate and flames can burn vigorously even though they extinguish in front. Some fabrics showed first increasing, then decreasing heat evolution with increasing air speed, and for others the heat evolution decreased fairly linearly with air speed. Air streams did not extinguish fabrics which form chars and which had started to burn on the inside.

There was a common thread between the results of the various extinguishment experiments: fabrics which evolved little heat when they burned in still air generally were easily extinguished by any of

the methods discussed above. If, in addition, such fabrics also do not ignite easily, they could be considered relatively "low risk".

2. EXPERIMENTAL

The objective of the work reported here was to characterize the effectiveness of frontal airflow alone upon the extinguishment of burning apparel fabrics. More specifically, we wished to exclude the effects of solid heat sinks and reduced oxygen concentrations. The AFMA was modified and a device to achieve airflow of 0-8 miles per hour was constructed to simulate the running of a potential victim. Airflow was initiated at the given thermal recognition point of a 5°C temperature rise at the AFMA body surface. The time to extinguish, area burned, percent of second degree or greater burn injury, and maximum total heat are reported as measures of ease of airflow extinguishment.

2.1 Description of AFMA

The Apparel Fire Modeling Apparatus (AFMA), described in detail in earlier publications [17,18], was modified and recalibrated for this study. The AFMA is a vertically mounted semi-cylinder 58 cm (23 in) high and has a diameter of 18 cm (7.1 in) (figure 1). The surface of the semi-cylinder is almost completely covered by 54 blackened copper sensors. The sensors are 7.6 x 2.5 cm (3.0 x 1.0 in), and are separated by 0.3 cm strips of mineral board (figure 2). The total area of sensors is approximately 1050 cm^2 (163 in^2). Heat transferred to each sensor is recorded electronically every 3 seconds. Fabric is cut to pattern using a special aluminum platen so that the desired direction of the fabric will always be mounted in the vertical direction.

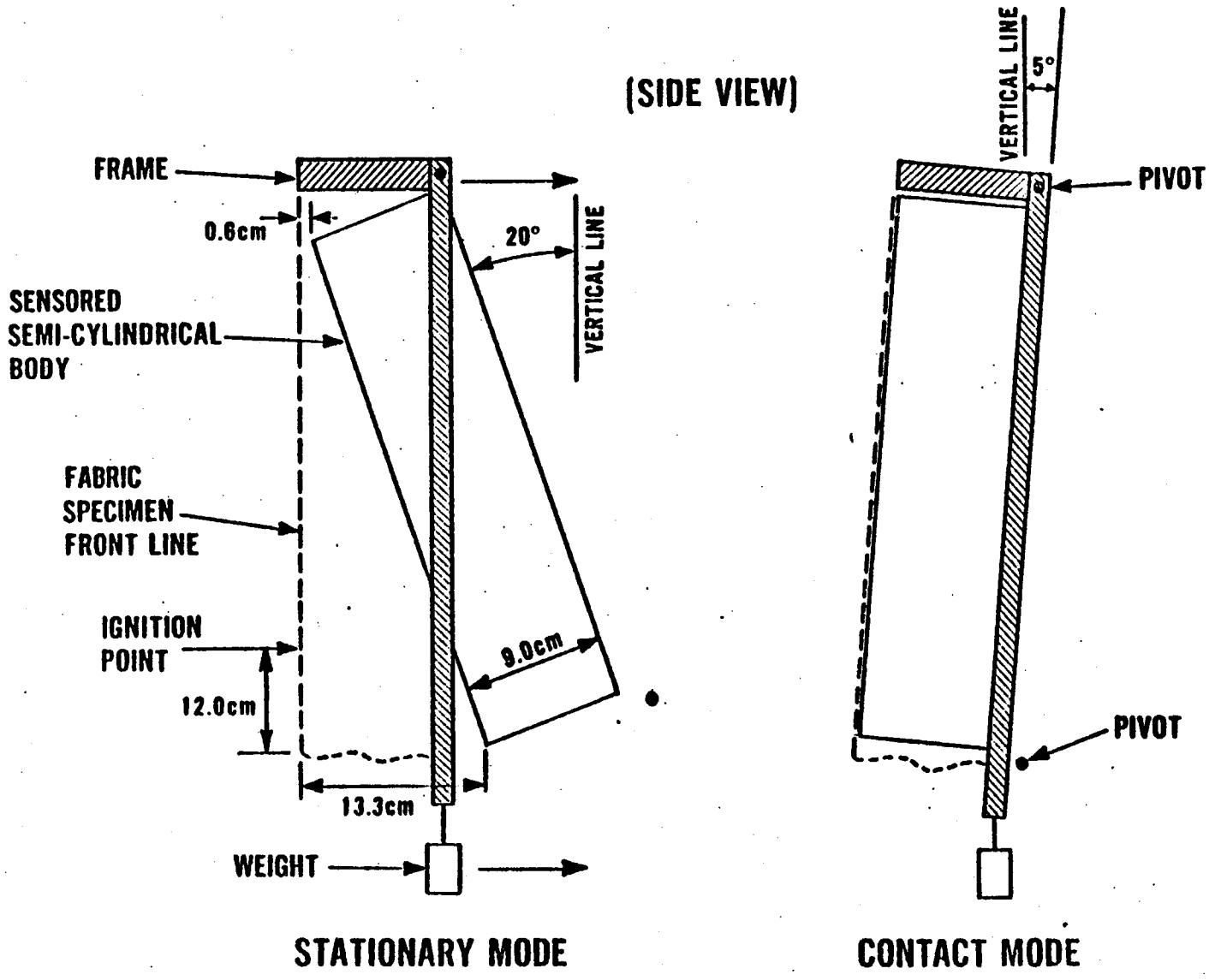

Figure 1. Apparel Fire Modeling Apparatus (AFMA)

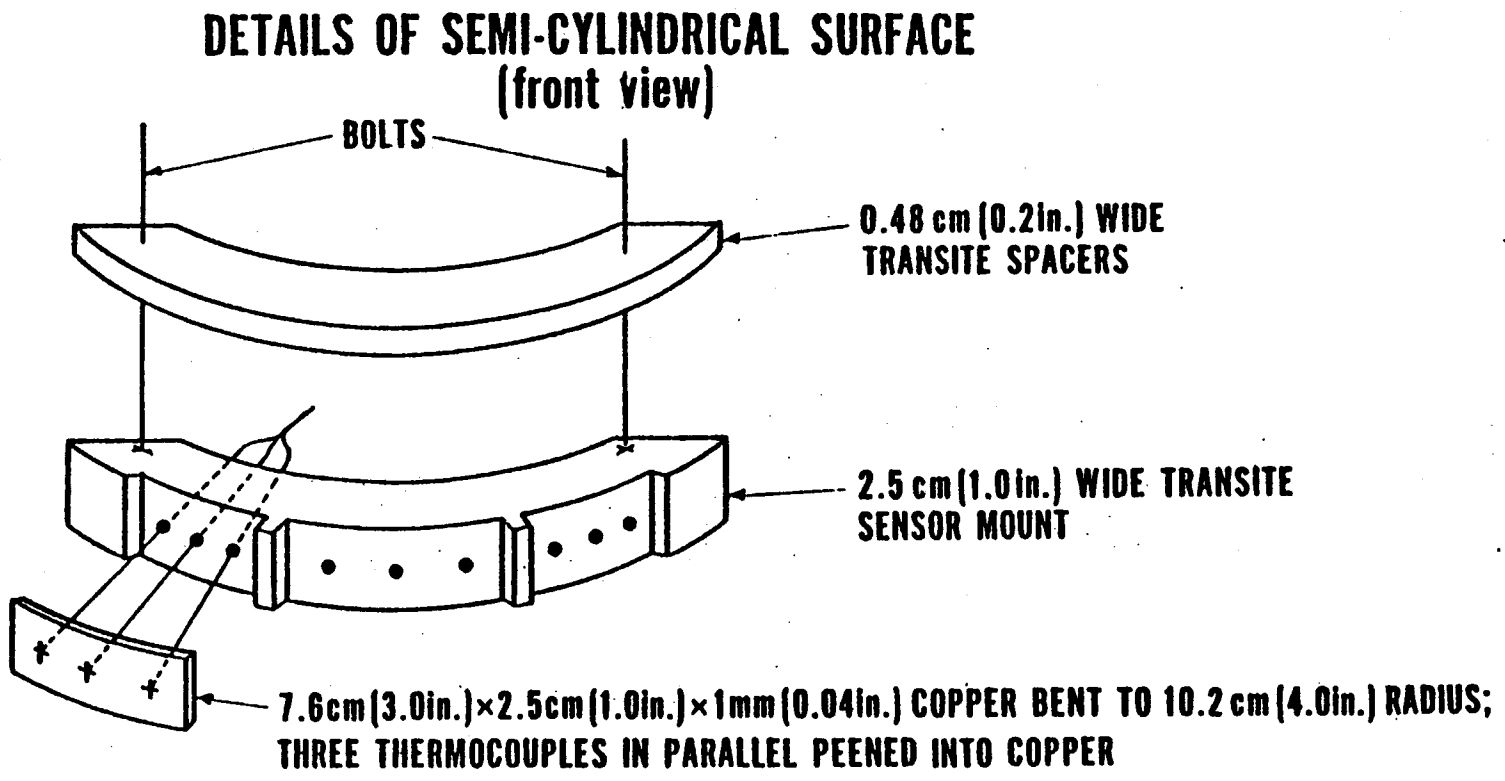

Figure 2. Apparel Fire Modeling Apparatus (AFMA) (Details)

This platen allowed for corner adjustments and had a hole for marking the point of ignition at the center 12 cm (4.75 in) up from the bottom edge of the fabric. In most cases the machine direction of the fabric was mounted vertically.

Initial experiments were run using the AFMA in the stationary mode only (figure 1). Results are shown in table 1. Visual observations showed that even modest frontal airflow rates caused some of the free hanging fabrics to contact the AFMA body and thus be extinguished in part by the heat sink capacity of the AFMA rather than by airflow alone.

To eliminate this effect from this study, a 3-inch extension apparatus was designed and constructed. The two vertical stainless steel rods and the outer support member did not serve as a significant heat sink. Thus the fabric was gently held at a distance of 7.6 cm (3.0 in) from the AFMA at all points (figure 3). Data using the 3-inch extension apparatus are presented in table 2.

The 3-inch extension apparatus was closed at the top with a solid metal plate. A flame-retardant fabric backing of fiberglass or Nomex aramid fabric was snugly fastened with clamps to cover the entire back portion of the AFMA. Thus a pant leg or slender torso with a top closure or belt was most nearly simulated. This technique eliminated what might be any "chimney effect".

Table 1

Airflow Extinguishment Data - Regular AFMA*

Fabric Description					Airflow at 0 m/min[1]							Airflow at 45.7 m/min[2]						
Fabric Designation	Composition - Construction	Fabric Weight g/m^2	Fabric Weight oz/yd^2	Direction of Fabric[3]	Recognition Time, sec	Extinguishing Time, sec	Area Burned (Fabric) %	Injury Area cm^2	Total Heat (Time, sec) cal	Maximum Total Heat, Cal	Extinguished Yes or No	Recognition Time, sec	Extinguishing Time, sec	Area Burned (Fabric) %	Injury Area cm^2	Total Heat (Time, sec) cal	Maximum Total Heat, Cal	Extinguished Yes or No
GIRCFF G-13	100 Acetate (knit)	110	3.2	F	12	115	100	515	2110 (48)	2870	No	11	46	50	326	1260 (15)	1590	Yes
				W	12	75	100	189	1630 (39)	2090	No	10	40	75	84	1090 (18)	1130	Yes
				-	(avg) 12	90	100	352	1870 (44)	2480	No	11	43	63	205	1180 (17)	1360	Yes
ATMI A-44	48/52Cot/Pet (knit)	165	4.8	F	17	79	95	641	5090 (33)	5810	No	22	146	60	662	2170 (42)	3970	Yes
				W	13	136	95	987	7320 (66)	8910	No	13	42	25	346	1460 (27)	1580	Yes
				-	(avg) 15	108	95	814	6210 (50)	7360	No	18	94	43	504	1820 (35)	2780	Yes
ATMI A-44	51/49Macr/Acr (knit)	290	8.6	F	18	98	60	546	1860 (96)	5600	No	19	86	10	231	2050 (48)	2500	Yes
				W	16	148	80	462	4550 (63)	5230	No	13	43	5	84	691 (27)	792	Yes
				-	(avg) 17	123	70	504	3210 (80)	5420	No	16	65	7.5	158	1370 (38)	1650	Yes
ATMI A-50	15/85Pet/Cot (2Xterry)(woven)	320	9.4	F	30	192	100	966	11070 (72)	12530	No	30	"79" with water	100	1050	10980 (49)	11460	No

*Fabrics could contact AFMA

[1](0 ft/min) (0 mph) [2](150 ft/min) (1.7 mph)

[3]W means that the fabric warp or machine direction was mounted vertically. F indicates the fabric was mounted perpendicular to W.

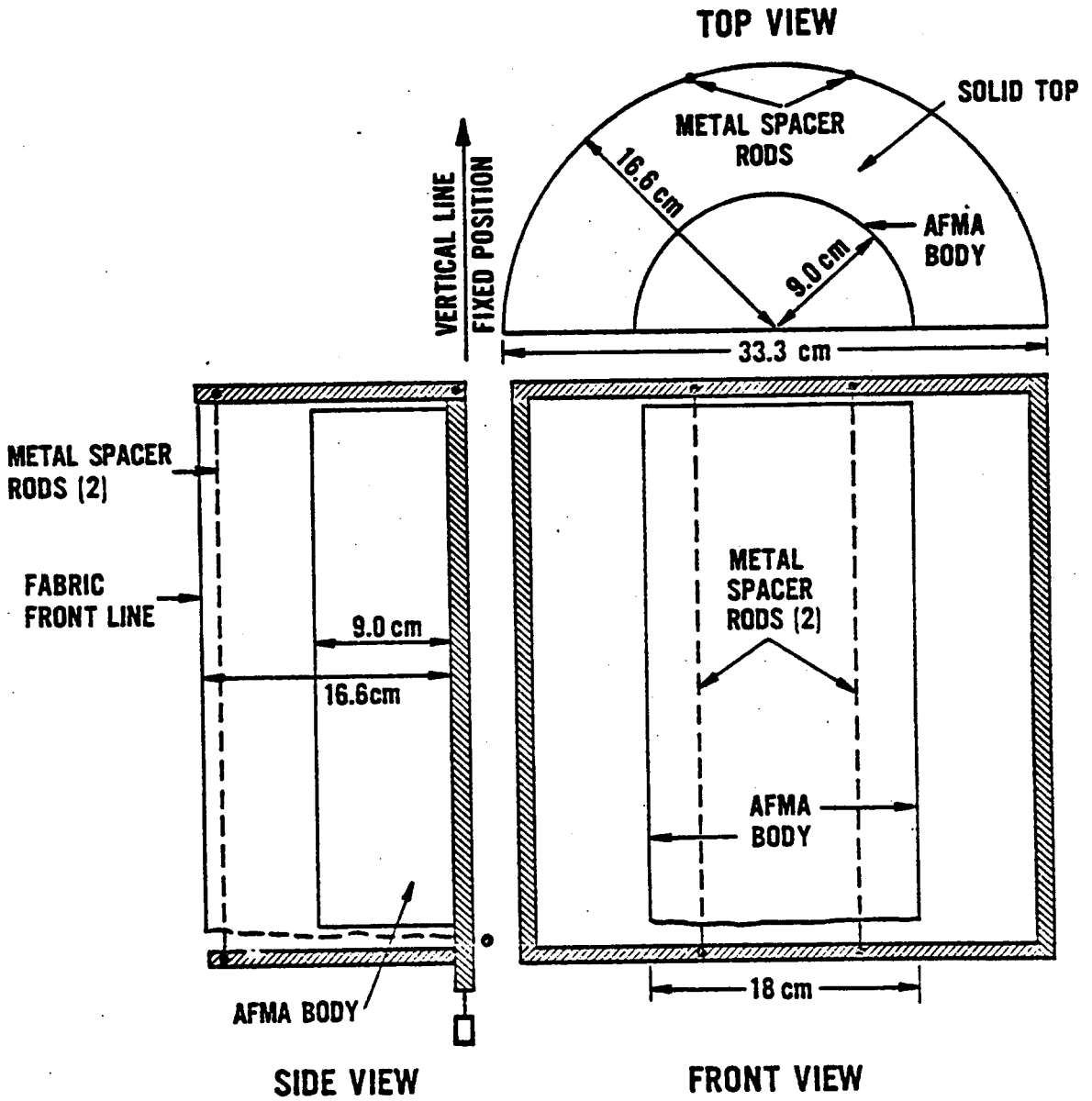

Figure 3. Three-Inch Extension Apparatus

Table 2 - Part One

Three - Inch Extension - AFMA
Airflow Extinguishment Data

Fabric Description				Airflow at 0 m/min[3]							Airflow at 45.7 m/min[4]						
Fabric Designation	Composition - Construction	Fabric Weight g/m^2	Fabric Weight oz/yd^2	Recognition Time, sec	Extinguishing Time, sec	Area Burned (Fabric) %	Injury Area cm^2	Total Heat (Time, sec) cal	Maximum Total Heat, Cal	Extinguished Yes or No	Recognition Time, sec	Extinguishing Time, sec	Area Burned (Fabric) %	Injury Area cm^2	Total Heat (Time, sec) cal	Maximum Total Heat, Cal	Extinguishing Time, sec
GIRCFF G-13	100 Acetate (knit)	110	3.2	None	65	100	0	786 (42)	821	No	1	-	-	-	-	-	-
ATMI A-26	48/52Cot/Pet (knit)	165	4.8	12	135	100	641	3580 (90)	4400	No	12	179	100	536	2270 (36)	2790	No
ATMI A-44	51/49Macr/Acr (knit)	290	8.6	15	140	100	557	3060 (60)	3490	No	16	36	5	21	467 (24)	474	Yes
ATMI A-50	15/85Pet/Cot (2XTerry)(woven)	320	9.4	30	-	100	700	12500	6500	Yes	2	-	-	-	-	-	-
ATMI A-1	100 Pet (knit)	285	8.4	None	94	8	0	412 (87)	424	Yes	2	-	-	-	-	-	-
GIRCFF G-10	100 Cot (woven)	70	2.0	6	56	100	147	1710 (39)	1930	No	1	-	-	-	-	-	-
GIRCFF G-17	65/35Pet/Cot (woven)	85	2.5	9	129	100	175	1860 (54)	2360	No	8.5	67	60	0	1090 (18)	1240	Yes
ATMI A-28	50/50Pet/Cot (woven)	325	9.6	33	None (290+)	100	579	4430 (177)	6180	No	36	224	70	707	4570 (75)	5990	??
ATMI A-65	100 Acetate (woven)	175	5.1	13	135	100	385	3190 (63)	3430	No	14.5	68	35	43	819 (24)	1010	Yes
ATMI A-52	100 Cotton (blue denim)(woven)	500	14.7	25	none (615+)	100	767	7300 (135)	10530	No	28	225 "H_2O"	100	995	9120 (117)	10520	No
GIRCFF G-12	100 Nylon (knit)	85	2.5	None	9	3	0	60 (19)	66	Yes	2	-	-	-	-	-	-
SNBS E-10	100 Pet (woven)	250	7.3	108	207	20	0	573 (180)	633	Yes	43	46	5	0	7.7 (18)	170	Yes

[1] Insufficient fabric

[2] No need to test further as extinguishment occurred earlier

[3] (0 ft/min)(0 mph)

[4] (150 ft/min) (1.7 mph)

Table 2 - Part Two

Three - Inch Extension - AFMA
Airflow Extinguishment Data

Fabric Description				Airflow at 76.2 m/min[3]							Airflow at 213 m/min[4]						
Fabric Designation	Composition - Construction	Fabric Weight g/m^2	Fabric Weight oz/yd^2	Recognition Time, sec	Extinguishing Time, sec	Area Burned (Fabric) %	Injury Area cm^2	Total Heat (Time, sec) cal	Maximum Total Heat, Cal	Extinguished Yes or No	Recognition Time, sec	Extinguishing Time, sec	Area Burned (Fabric) %	Injury Area cm^2	Total Heat (Time, sec) cal	Maximum Total Heat, Cal	Extinguishing Time, sec
GIRCFF G-13	100 Acetate (knit)	110	3.2	2	-	-	-	-	-	-	-	-	-	-	-	-	-
ATMI A-26	48/52Cot/Pet (knit)	165	4.8	9	160	90	599	2480 (24)	2810	No	11	42	20	105	976 (18)	1020	Yes
ATMI A-44	51/49Macr/Acr (knit)	290	8.6	2	-	-	-	-	-	-	15	24	5	43	629 (18)	637	Yes
ATMI A-50	15/85Pet/Cot (2XTerry)(woven)	320	9.4	1	-	-	-	-	-	-	26	"84" water	100	641	2830 (39)	3020	No
ATMI A-1	100 Pet (knit)	285	8.4	2	-	-	-	-	-	-	2	-	-	-	-	-	-
GIRCFF G-10	100 Cot (woven)	70	2.0	2	-	-	-	-	-	-	9	26	35	109	842 (12)	848	Yes
GIRCFF G-17	65/35Pet/Cot (woven)	85	2.5	2	-	-	-	-	-	-	8	43	30	0	631 (12)	652	Yes
ATMI A-28	50/50Pet/Cot (woven)	325	9.6	2	-	-	-	-	-	-	35	57	7	44	459 (42)	647	Yes
ATMI A-65	100 Acetate (woven)	175	5.1	8	53	20	0	596 (18)	658	Yes	15	24	30	43	776 (15)	792	Yes
ATMI A-52	100 Cotton (Blue Denim)(woven)	500	14.7	2	-	-	-	-	-	-	23	78	10	131	1700 (51)	1790	Yes
GIRCFF G-12	100 Nylon (knit)	85	2.5	2	-	-	-	-	-	-	2	-	-	-	-	-	-
SNBS	100 Pet (woven)	250	7.3	8	25	3	0	110 (12)	125	Yes	2	-	-	-	-	-	-

[1] Insufficient fabric.

[2] No need to test further as extinguishment occurred earlier

[3] (250 ft/min)(2.9 mph)

[4] (700 ft/min)(8.0 mph)

A monitoring circuit follows the temperature of four sensors located at various heights in the center column on the AFMA. When any one of these four sensors register a temperature rise of 5°C there is an audible sound and a visible light which signals the manual initiation of the airflow. Recognition time is the time in seconds from fabric ignition to this signal. This 5°C temperature rise was selected as that which would probably be sufficient to be perceived by a person who then may respond by running.

2.2 Calibration of AFMA Sensors

The constants for each of the 54 sensors on the face of the AFMA were recalibrated individually using a voltage controlled heat lamp as the radiative heat source. The average values for duplicate runs were placed into the computer program. In previous work the sensor constants were determined in banks of 5 using a heated quartz panel (Casso-Solar Heater, Type "C"). The difference between sensor constants determined for this study as well as the work of Miles [26,27] and those used in earlier work [17,18,20] is primarily due to the calculation of the initial slope at a shorter time of exposure used, generally 10-20 seconds, rather than use of a "calculated slope" at 60 seconds of radiant heat exposure. The temperature as a function of time curve was non-linear after 30 seconds, most likely due to conductive and convective heat losses from the sensors. In many actual runs the time for a given sensor to reach maximum heat was 30 seconds or less as shown in computer print outs. This time is different than that time at maximum heat for all sensors which is shown in tables 1 and 2, and different from the total burn time which may run up to 120 seconds or even longer.

2.3 Description of Airflow Generating Apparatus

The purpose of this apparatus is to supply room air with a steady flow from zero to approximately 8 miles per hour (zero to 700 ft/min) (zero to 213 m/min). This upper limit was selected to represent the top running speed of a person. A furnace blower fan driven by an electric motor using various belts and pulleys allowed us this full range of airflow (figure 4).

The final airflow was measured with a Thermal Anemometer at a point 5.1 cm (2.0 in) in front of the fabric at the point of ignition. Airflow rates of 0, 45, 76, and 213 m/min $\pm$ 5 m/min (0, 150, 250, and 700 ft/min $\pm$ 15 ft/min) were essentially uniform across the face of the specimen, 33.0 cm x 38.1 cm = 1260 cm^2 (13 in x 15 in = 195 in^2).

In no case did the airflow cause the fabric to touch the body of the AFMA.

2.4 Data Acquisition and Computation

The data acquisition and computations were carried out as in previous AFMA work including the use of the burn injury area concept. The heat sensors of the AFMA surface were scanned every 3 seconds and the thermocouple outputs were recorded electronically and processed by computer to yield equivalent heat flux values for each sensor.

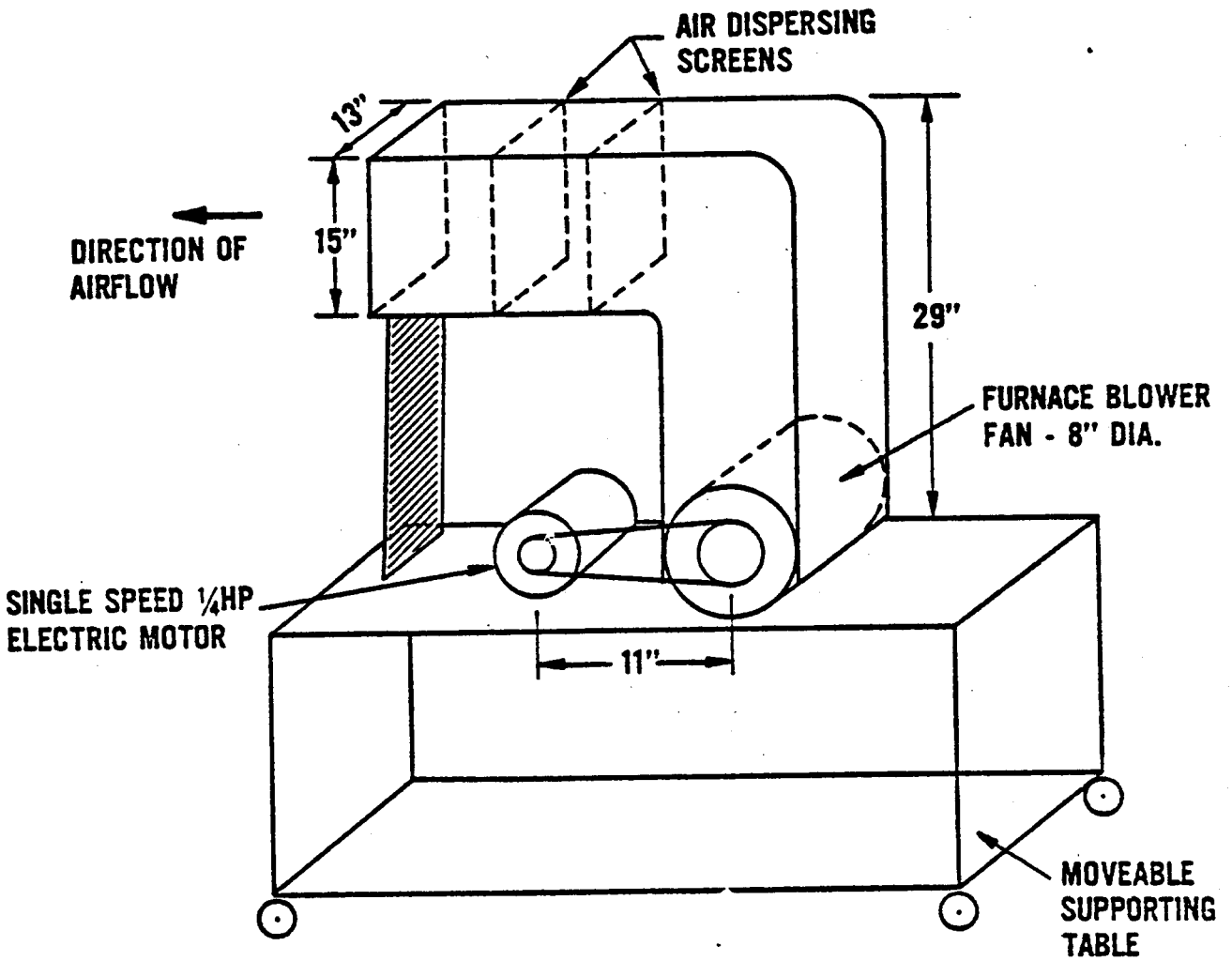

Figure 4. Airflow Generating Apparatus

In addition to the heat transferred to each sensor, an estimation of burn injury area was made for each sensor. The burn injury area described here is an estimated second-degree or greater burn based on the work of Derksen [7], in which the heat-exposure rate relationship for second-degree burns was experimentally determined. The number of "injured" sensors was determined for each 3-second interval from time of ignition, and used to calculate the burn injury area reported in tables 1 and 2. Consideration of the burn injury area along with the total heat delivered to this area permits a relative comparison of the depth of injury which may be caused by the burning of the various fabrics. It must also be noted that the heat sensors are blackened copper with thermal characteristics quite different from those of human skin. The burn injury area concept thus is an approximation, but permits a comparative ranking of fabrics in terms of their burn injury potential.

Total heat and maximum total heat are reported in tables 1 and 2. Total heat is reported in calories at a given time (seconds from fabric ignition) when the total heat is at a maximum. More specifically, total heat is determined at the time when the sum of the heat registered by each of the 54 sensors is at a maximum. Maximum total heat is also reported in calories, but is determined by the summation of the maximum heat for each sensor regardless of the time for each sensor to reach this maximum. Maximum total heat is always larger than the total heat determined at a given time. The magnitude of the difference between these two values is influenced primarily by the rate of burning.

2.5 Fabrics

The fabrics used in this work were generally selected from those supplied by ATMI for the Cooperative Apparel Fire Accidents Flammability Program. The fabrics were representative of the range of fiber and fabric types presently in common use but also included a few experimental fabrics. The 12 fabrics used in this work are described in table 2.

2.6 Airflow Simulation Procedure

The samples were prepared from washed fabric (AATCC Test Method 124-1967) and conditioned in a room maintained at approximately 23°C and a relative humidity of 40 percent. The samples were then mounted on the modified AFMA. A paper tab, ignited with a match, placed 12 cm (4.75 in) up from the bottom edge served as the ignition source. Upon ignition of the fabric, a stopwatch was started to determine the time until the temperature of one of the four monitored sensors increased by 5°C. This was called the recognition time. Airflow was started at this time.

At ignition of the fabric, the data acquisition system was started and allowed to scan the sensors during the burning of the fabric and for about 15 seconds after the last evidence of fabric combustion. For those fabrics which would not ignite with surface ignition, a second attempt was made by ignition at the bottom edge with a paper tab ignited with a match.

After each experiment, all heat sensors were allowed to cool until the potential from the thermocouples was 0.025 mv or less. If indicated, the sensors were cleaned and repainted.

3. RESULTS AND DISCUSSION

3.1 Regular AFMA - Stationary Mode

The first set of experiments was run without the use of the 3-inch extension apparatus and with the AFMA in the vertical and stationary mode. There were strong indications from the data shown in table 1 and in figures 5 and 6 that an airflow of as little as 45.7 m/min (150 ft/min) significantly reduced the burn injury potential for three of the four fabrics studied. However, it was readily observed that the free-hanging fabric specimen was blown towards and, at times, touched the AFMA body. When contact was made the flame was usually extinguished. The AFMA body served as a heat sink. Extent of such contact varied with fabric specimen orientation. This may, in part, explain the differences seen in runs on the same fabric performed in the machine direction (W) and perpendicular to that direction (F). As we wished to determine the contribution of airflow rate only, the 3-inch extension apparatus was designed, constructed and used in all additional runs.

The terry fabric (Fabric A-50) was not extinguished by this frontal airflow rate, but resulted in nearly the same burn injury potential with or without airflow. This evaluation is based upon greater burn injury area and only slightly differing maximum total heat to the AFMA (figures 5 and 6).

3.2 Three-Inch Extension Apparatus for AFMA

Data for runs using the 3-inch extension apparatus are shown in table 2. Use of this apparatus essentially eliminated fabric contact with the AFMA surface and thus the heat sink effect. Note that the

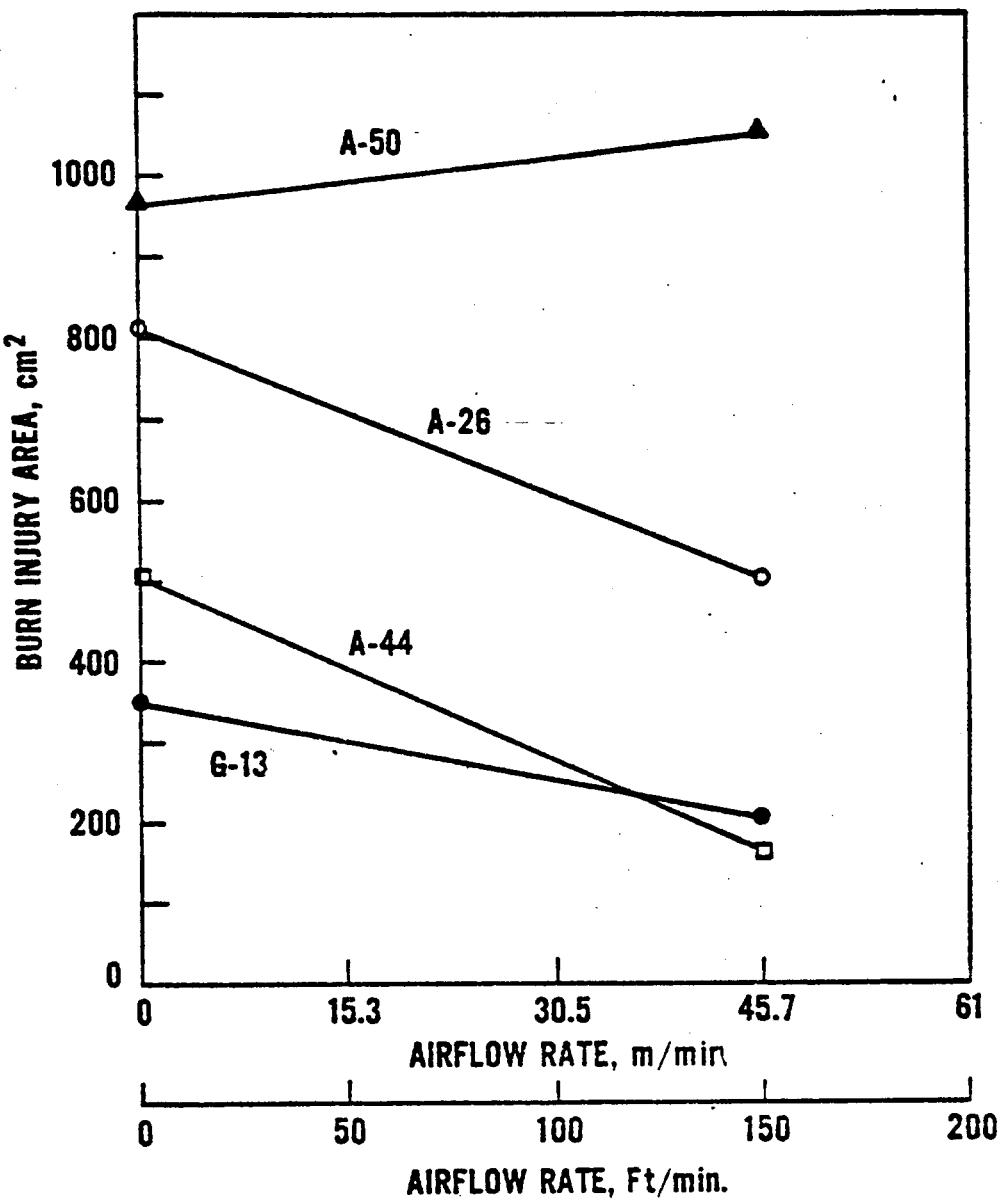

Figure 5. Burn Injury Area vs Airflow Rate (Regular AFMA)

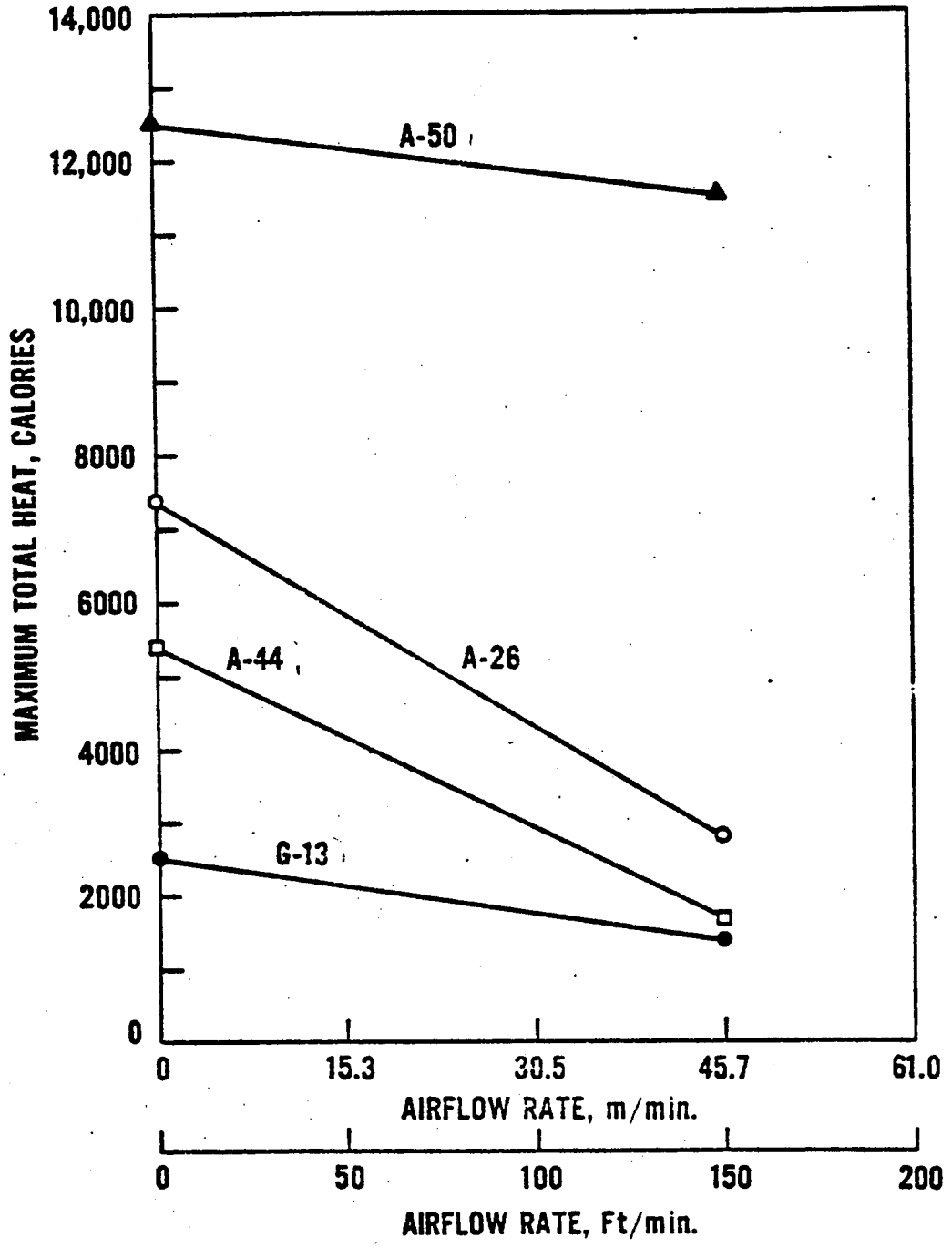

Figure 6. Maximum Total Heat vs Airflow Rate (Regular AFMA)

burn injury area and maximum total heat values are different from those shown in table 1 for the same fabrics due to the different fabric configurations used. In the case of the free hanging AFMA configuration the fabric was 13.3 cm (5.25 in) away from the AFMA body at the bottom and only 0.64 cm (0.25 in) at the top (figure 1). In the case of the 3-inch extension apparatus the fabric was supported 7.6 cm (3.0 in) from the AFMA body at all points (figure 2). Use of the 3-inch extension apparatus also required larger fabric samples (more potential fuel).

These data confirm the results shown in table 1 that increased airflow rates generally reduce the potential burn injury. More specifically, in figure 7 the burn injury area is effectively reduced except for the terry fabric A-50. In figure 8 the maximum total heat was reduced in each case, however, fabric A-50 showed less reduction in maximum total heat than the other fabrics. As shown in figure 9, the time to extinguishment was decreased with increasing airflow for most fabrics. Again fabric A-50 showed no change at the highest airflow as the fabric would have burned fully and was extinguished by water.

The average recognition time (the time from ignition until one of four selected sensors registered a temperature rise of 5°C) for these fabrics were somewhat different. Note that the average values for the fabrics in table 1 are in the same rank order as in table 2 where runs were made using the 3-inch extension apparatus. The data taken from these tables are summarized below:

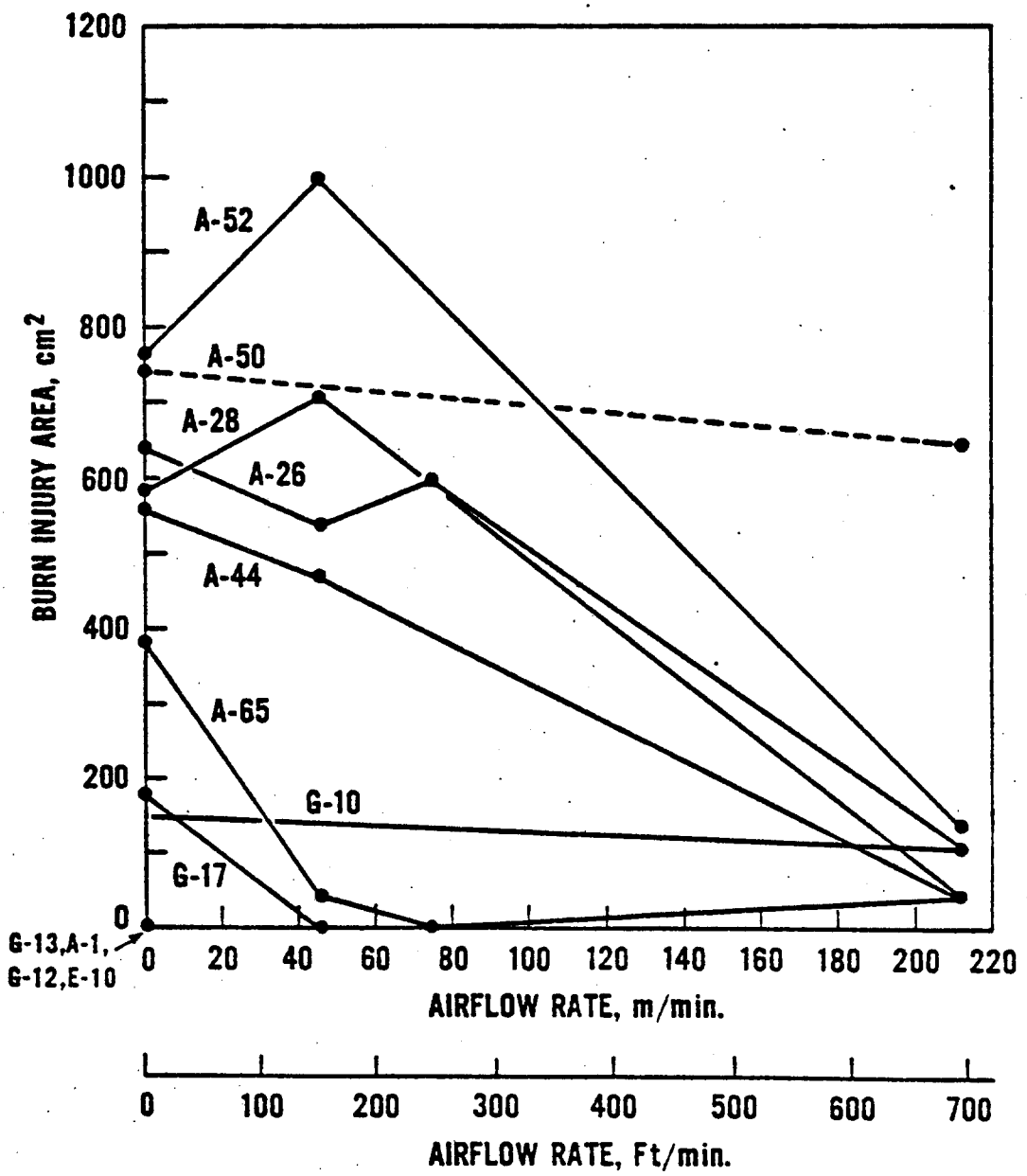

Figure 7. Burn Injury Area vs Airflow Rate (Three-Inch Extension Apparatus)

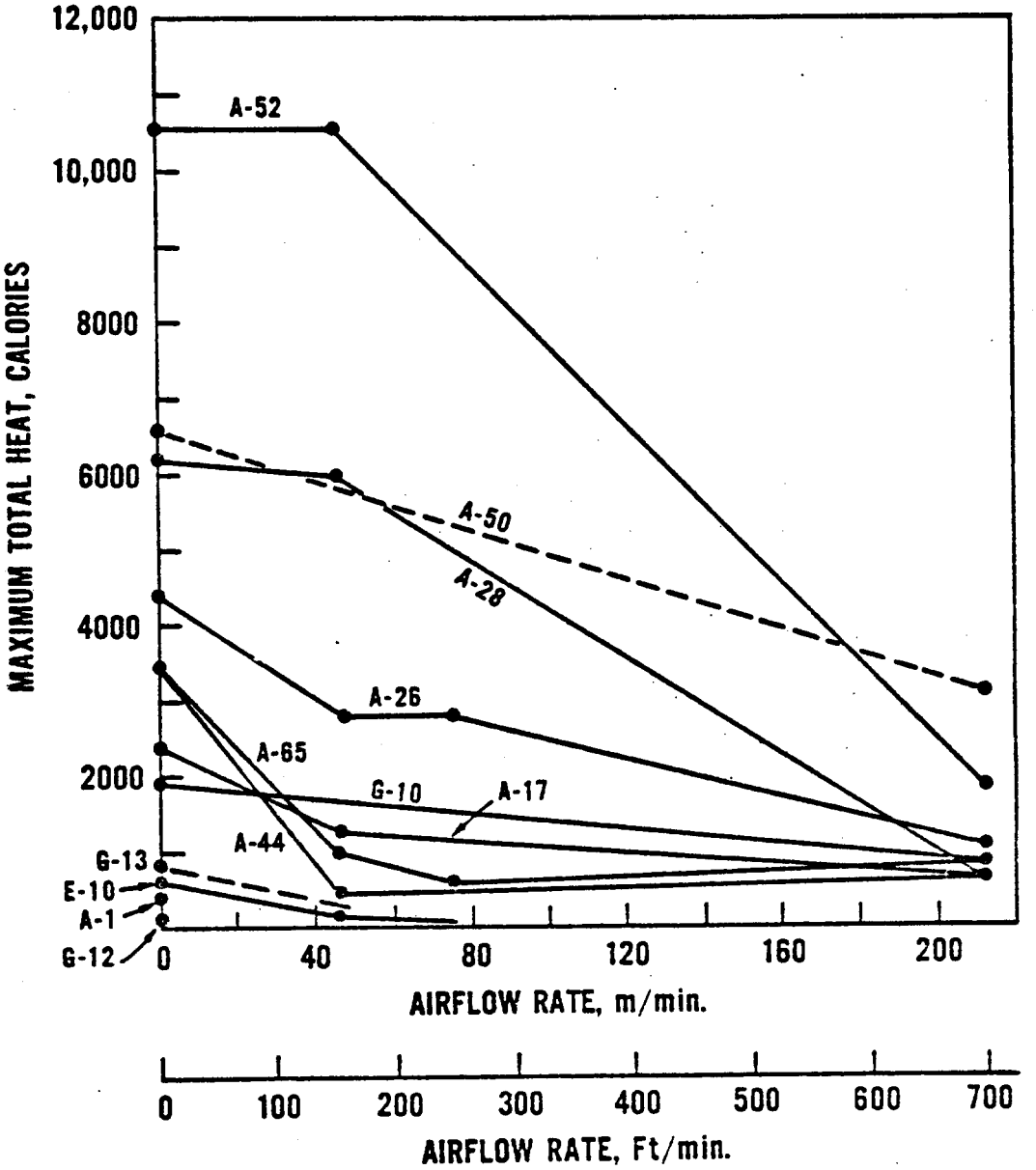

Figure 8. Maximum Total Heat vs Airflow Rate (Three-Inch Extension Apparatus)

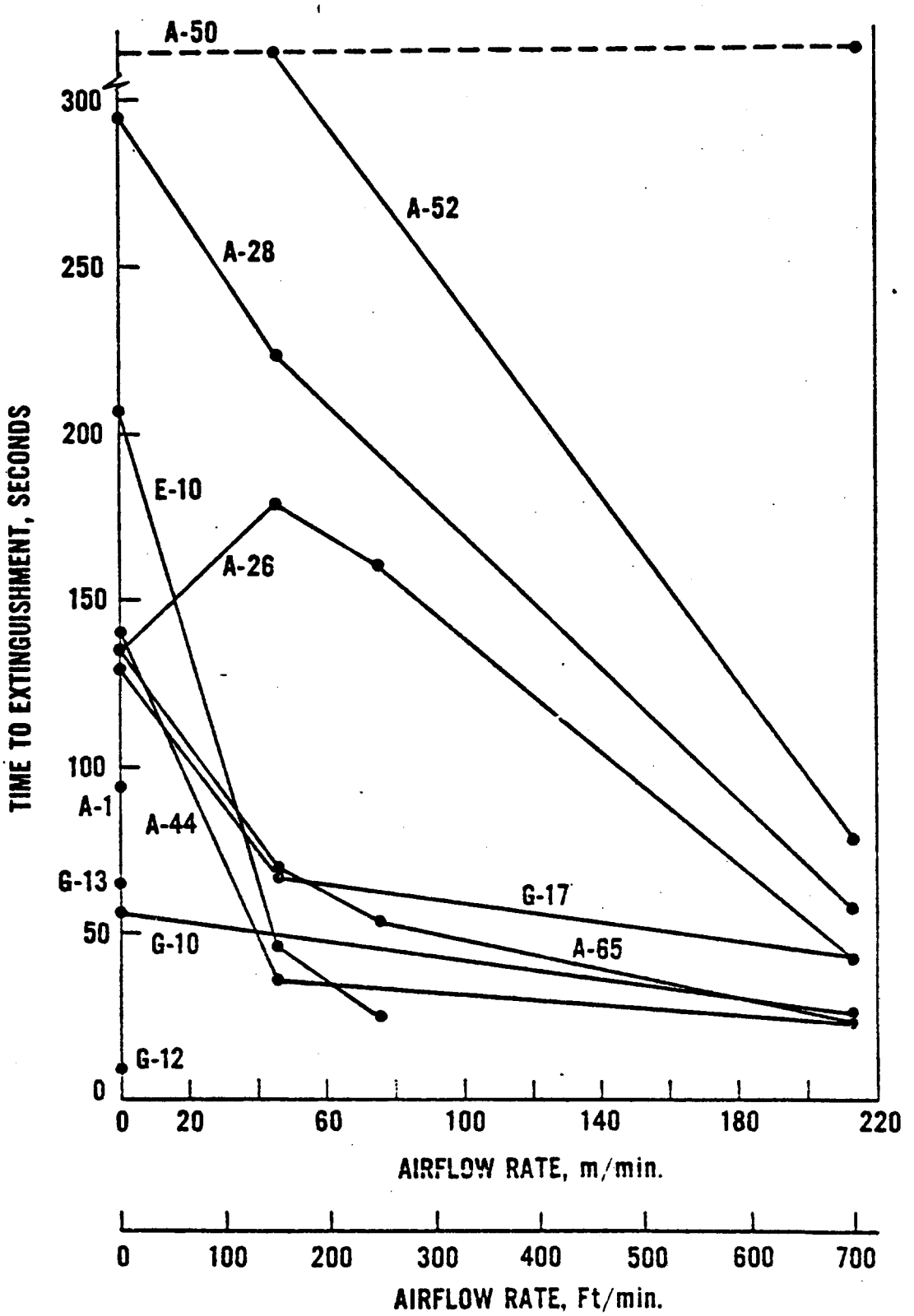

Figure 9. Time to Extinguishment vs Airflow Rate (Three-Inch Extension Apparatus)

Fabric Identification	Average Recognition Time, Seconds Regular AFMA	AFMA with Extension
G-13	12	-
A-26	15	11
A-44	17	15
A-50	30	26

In the case of fabric G-13 using the 3-inch extension apparatus, the AFMA did not see a 5°C rise nor was any injury observed in spite of the fact that this lightweight acetate fabric was fully consumed by fire.

3.3 Influence of Fabric Weight Upon Airflow Extinguishment

The influence of fabric weight upon the ease of frontal airflow extinguishment is clearly shown in the data of table 3. In figure 10 only the eight cotton or polyester/cotton (cellulose containing) fabrics are considered. The parameters of maximum total heat and burn injury area at the airflow rate of 45.7 m/min are plotted against fabric weight. Both of these parameters increase with increasing fabric weight. The non-cellulose containing fabrics (G-12, E-10, A-1, and A-44) were all much lower in burn injury area and maximum total heat at this airflow rate, and thus did not fit the fabric weight relationships seen for the cellulose containing fabrics.

Table 3

Fabric Classification by Ease of Airflow Extinguishment

Fabric Designation	Fabric Weight g/m_2	Fabric Weight oz/yd_2	Max. Total Heat, cal at 45.7 m/min	Burn Injury Area, cm_2	Group Classification
Cellulosic					
A-52	500	14.7	10,520	995	C
A-28	325	9.6	5,990	707	C
A-50	320	9.4	5,800*	720*	C
A-65	175	5.1	1,010	43	B
A-26	165	4.8	2,790	536	C
G-17	85	2.5	1,240	0	B
G-10	70	2.0	1,700*	140*	B
Non-Cellulosic					
G-12, nylon	85	2.5	<50*	0	A
G-13, acetate	110	3.2	800*	0*	A
E-10, polyester	250	7.3	170	0	A
A-1, polyester	285	8.4	<400*	0	A
A-44, modacr./ acr.	290	8.6	474	21	B

*Estimated or extrapolated from data in Tables 1 and 2.

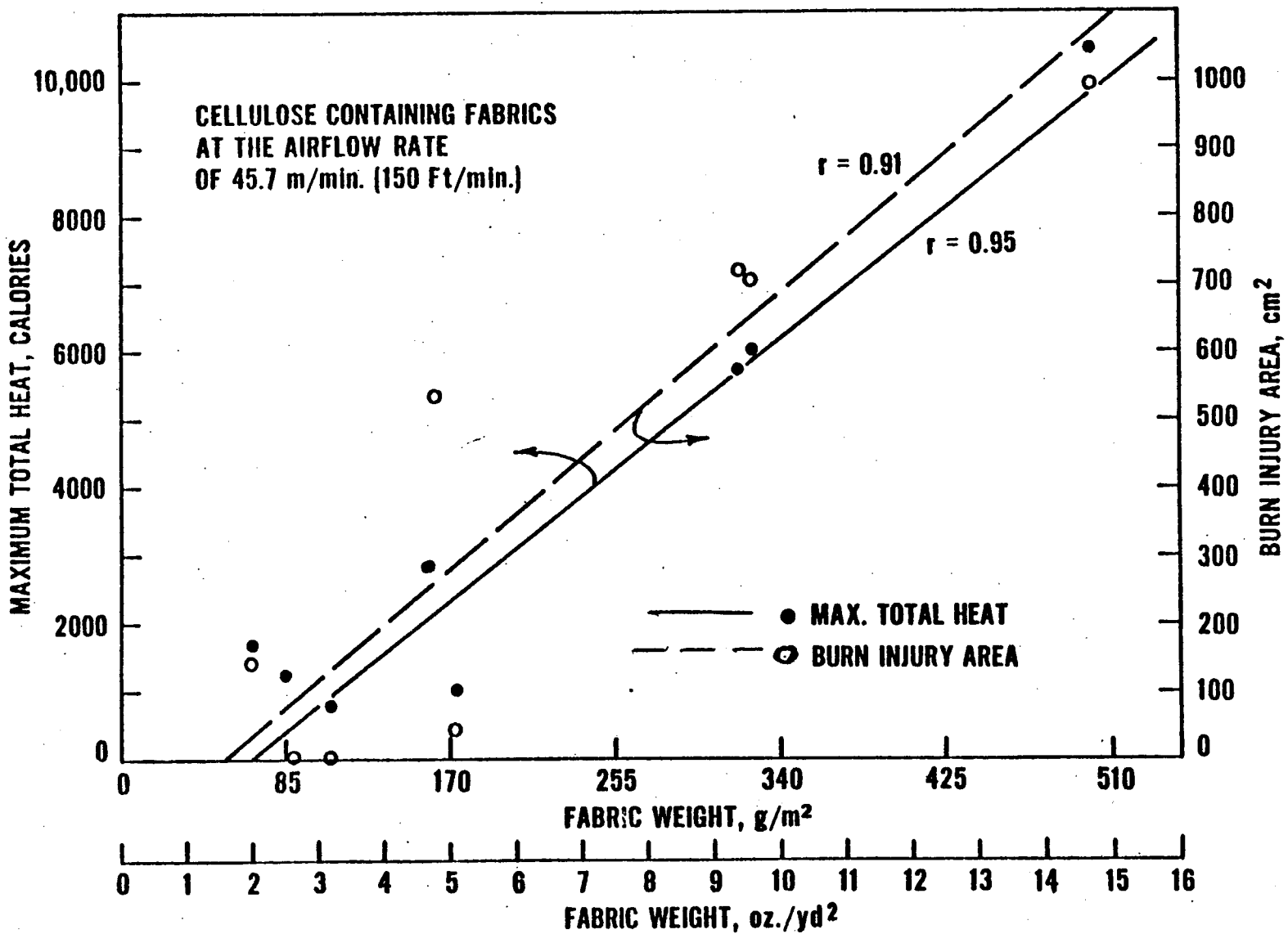

Figure 10. Total Heat and Burn Injury Area vs Fabric Weight

3.4 Fabric Classification by Ease of Frontal Airflow Extinguishment

The work of Meierhoefer, et al. [24] and this work which use the AFMA and the AFMA with the 3-inch extension apparatus allow greater assurance of the classification of fabrics based upon ease of extinguishment. In this study the fabrics selected were the same or very much like those placed in five of the seven classifications defined by Meierhoefer.

Use of the 3-inch extension apparatus on the AFMA permitted the study of all fabrics, including thermoplastics. It also permitted the measurement of the effect of airflow alone upon extinguishment.

Although the 12 fabrics studied may not represent the full spectrum of fabrics, three groupings have been defined based upon burn injury area and maximum total heat. Group A showed the least potential burn hazard, while group C showed the most. Group classifications are shown in table 3.

4. CONCLUSIONS

Burning fabrics were subjected to frontal airflows of varying intensity. The heat flux to a simulated body behind the fabric specimens was measured. Most of the fabrics were extinguished by the higher airflows, but one, a terry towel fabrics, continued to burn and deliver heat to the simulated body even when exposed to the highest airflow (213 m/min or 8 m.p.h). The other fabrics delivered generally less heat to the simulated body as the airflow increased.

Thermoplastic fabrics (nylon, polyester, and acetate) delivered less heat to the simulated body than cellulose containing fabrics. For the latter, the amount of heat delivered increased roughly with fabric weight.

Only the heat delivered to the front of the simulated body was measured in this work. However, it has been observed in real life situations and in the laboratory [31] that even with frontal ignition, flames may travel to the back of garments and continue burning even if the frontal areas extinguish.

5. REFERENCES

[1] Part 1610 - Standard of the Flammability of Clothing Textiles, Code of Federal Regulations, Flammable Fabrics Act Regulations, U.S. Government Printing Office, 420-444 (Jan. 1, 1980).

[2] Proposed Standard for the Flammability of General Wearing Apparel, Draft 4, U.S. Consumer Product Safety Commission, Washington, D.C. 20207 (Sept. 26, 1976).

[3] Braun, E., Cobble, V. B., Helzer, S., Krasny, J. F., Peacock, R. D. and Stratton, A. K., Back-Up Report for the Proposed Standard for the Flammability of General Wearing Apparel, Nat. Bur. Std. (U.S.), NBSIR 76-1072 (June 1976).

[4] DOC FF 3-71, Children's Sleepwear, Standard for the Flammability of Children's Sleepwear, Federal Register, Vol. 36, No. 146, 14063-14065, 1968.

[5] Standard for the Flammability of Children's Sleepwear: Sizes 7 Through 14 (FF 5-74), Federal Register, Vol. 39, No. 85, 15210-15228 (May 1, 1974), as amended.

[6] Part 1615 - Standard for the Flammability of Children's Sleepwear: Sizes 0 Through 6X (FF 3-71), Part 1616 - Standard for the Flammability of Children's Sleepwear: Sizes 7 Through 14 (FF 5-74), Flammable Fabrics Act Regulations, Federal Register, Vol. 43, No. 25, 4849-4855 (Feb. 6, 1978).

[7] Derksen, W. L., Monahan, T. I., and Delehery, G. P., The Temperature Associated with Radiant Energy Skin Burns, Temperature - Its Measurement and Control in Science and Industry, Vol. 3, Part 3, 171-174 (1961).

[8] Stoll, A. M. and Chianta, M. A., Heat Transfer Through Fabrics as Related to Thermal Injury, Trans. N.Y. Acad. Science, Sec. II, Vol. 33, No. 7, 649-670 (1971).

[9] Stoll, A. M., The Role of the Skin in Heat Transfer, Advances in Heat Transfer, Vol. 4, 115-136, Academic Press, New York, 1967.

[10] Chianta, M. A. and Stoll, A.M., Heat Transfer in Protection from Flames, Aerospace Medicine, Vol. 35, 7-10, 1964.

[11] Evans, E. I., et al., Flash Burn Studies on Human Volunteers, Surgery, Vol. 37, 280-297, 1955.

[12] Mayer, M., The Use of Simulated Apparel Fire Accidents to Determine the Relative Flammability of Fabrics, Proc. 7th Ann. Mtg. Information Council on Fabric Flammability, New York, 263-248 (December 1973).

[13] Buchbinder, L. B., Human Behavioral Pattern vs. Injury Severity for Apparel Fire Victims, Proc. 7th Ann. Mtg. Information Council on Fabric Flammability, New York, 236-253 (December 1973).

[14] Bauer, J., "A Proposal for Test Method for Ease of Extinguishment", American Dyestuff Reporter, Vol. 64, 66 (November 1974).

[15] Krasny, J. F. and Fisher, A. L., Laboratory Modeling of Garment Fires, Textile Research J., Vol. 43, 272-283 (May 1973).

[16] Zawistowski, E. R., Krasny, J. F., Braun, E., Peacock, R. D., and Williams, N., The Measurement of Fabric Flammability Parameters in Experiments Simulating Human Movement in Burn Accidents, Nat. Bur. Std. (U.S.), NBSIR 77-1236, (June 1977).

[17] Meierhoefer, A. W., Braun, E., Krasny, J. F., and Peacock, R. D., Fire Accident Simulations With Apparel Fabrics, Nat. Bur. Std. (U.S.) NBSIR 79-1755, (1979).

[18] Bhat, G. R., Block, I., Yeh, K., and Spivak, S. M., Extinguishability of Flammable Textiles: Part I, Statement of the Problem, J. of Consumer Product Flammability, Vol. 3, 155-165 (1976).

[19] Krasny, J. F. and Francis, J. G., Ranking Extinguishability of Burning Fabrics, Textile Chemist and Colorist, Vol. 6, No. 6, 36-37 (June 1974).

[20] Fairall, P. A., The Influence of Selected Test Parameters on Extinguishability of Fabrics, Master's Thesis, University of Maryland, Department of Textiles and Consumer Economics (1976).

[21] Tesoro, G. and Backer, S., Extinguishment in Apparel Textiles, NBS Grant No. 4-9024, Final Report, Nat. Bur. Std. (U.S.) NBS-GCR6-76-71, (1976).

[22] Miles, L., Bhat, G. R., Sun, R. L., Yeh, K. and Spivak, S. M., Extinguishability of Flammable Textiles: Part II - Effects of Ambient Oxygen Concentration, J. of Consumer Product Flammability, 3, 166-192 (1976): Part III - Effects of Cooler, Inert Bodies, J. of Consumer Product Flammability, Vol. 5, 135-162 (Sept. 1978).

[23] Bercaw, J. R. and Jordan, G. K., Injury From Burning Garments, Pro. 8th Ann. Mtg., Information Council on Fabric Flammability, New York, 214-239 (December 1974).

[24] Bercaw, J. R., Industry Program on Thermo-Man and Its Relation to MAFT and Other Predictive Apparel Flammability Tests: Status Report, Proc. 10th Ann. Mtg., Information Council on Fabric Flammability, 338-356 (December 1976).

[25] Bercaw, J. R., Industry Apparel Flammability Program, Proc. of the 1978 Symposium on Textile Flammability, 75-92 Le Blanc Research Corporation, East Greenwich, Rhode Island 02818 (April 1978).

[26] Miles, L. B., The Burning Behavior of Borderline Fabrics, Proc. of the 1977 Symposium on Textile Flammability, 66-96, Le Blanc Research Corporation (April 1977).

[27] Miles, L. B., An Investigation of the Flammability Hazard of Apparel Fabrics, Proc. 6th Symposium on Textile Flammability, 38-74, Le Blanc Research Corporation (April 1978).

[28] Le Blanc, R. B. and Di Carlo, J. P., Tests for Ease of Extinguishment, Proc. 5th Symposium on Textile Flammability, 39-65, Le Blanc Research Corporation, East Greenwich, Rhode Island (1977).

[29] Le Blanc, R. B. and Di Carlo, J. P., Four Small Scale Tests for Flammability, Textile Chemist and Colorist, Vol. 10, 241-246, 1978.

[30] Pressley, T. A., Fincher, K. W., and Rowlands, R. J., Textile Flammability Testing, Textile Journal of Australia, Vol. 48, (2), 18-21, 38-40, 1973.

[31] Potthoff, P. A., Sun, R. L., Derrick, F. W., and Spivak, S. M., Extinguishability of Flammable Textiles: Part IV: Effects of Air Flow, Journal of Consumer Product Flammability, Vol. 6, 261-287 (Dec. 1979).

NBS-114A (REV. 2-80)

U.S. DEPT. OF COMM. **BIBLIOGRAPHIC DATA SHEET** *(See instructions)*	1. PUBLICATION OR REPORT NO. NBSIR 81-2386	2. Performing Organ. Report No.	3. Publication Date December 1981

4. TITLE AND SUBTITLE

AIRFLOW EXTINGUISHMENT OF BURNING APPAREL FABRICS

5. AUTHOR(S)

B.B. Hibbard, J.F. Krasny, E. Braun, and R.D. Peacock

6. PERFORMING ORGANIZATION *(If joint or other than NBS, see instructions)*

Man-Made Fiber Producers Association, Inc. Washington, D.C. 20036 and National Bureau of Standards Department of Commerce Washington, D.C. 20234

7. Contract/Grant No.

8. Type of Report & Period Covered Final Report

9. SPONSORING ORGANIZATION NAME AND COMPLETE ADDRESS *(Street, City, State, ZIP)*

10. SUPPLEMENTARY NOTES

☐ Document describes a computer program; SF-185, FIPS Software Summary, is attached.

11. ABSTRACT *(A 200-word or less factual summary of most significant information. If document includes a significant bibliography or literature survey, mention it here)*

The heat output of a burning fabric, subjected to a frontal airflow at various velocities, was measured behind the burning face of the fabric. Twelve different commercial fabrics were evaluated in this manner on the Apparel Fire Modeling Apparatus (AFMA). When the fabric burned to a given heat output, the selected level of airflow was applied to the face of the burning fabric in an attempt to extinguish the flame. Burn injury area, maximum total heat, and time to extinguishment were determined from AFMA data.

The burning fabrics quickly extinguished with an airflow of 213 meters per minute (8 mph) or less in all but one of the fabrics studied. The one exception was an 85/15 cotton/polyester double faced, terry cloth fabric where this and higher airflows only increased the rate of burning. For the eight fabrics investigated which contained cellulose, the maximum total heat and burn injury area increased as fabric weight increased. For most of the fabrics studied, the total heat transferred to the simulated body generally decreased with increasing air velocity. Fabrics were classified into three groups based upon these airflow extinguishment parameters.

12. KEY WORDS *(Six to twelve entries; alphabetical order; capitalize only proper names; and separate key words by semicolons)*

Airflow; burn (injuries); cotton; fabric flammability; fabrics; fire suppression; flame extinguishment; heat transfer; polyester; textiles.

13. AVAILABILITY

[XX] Unlimited

☐ For Official Distribution. Do Not Release to NTIS

☐ Order From Superintendent of Documents, U.S. Government Printing Office, Washington, D.C. 20402.

[XX] Order From National Technical Information Service (NTIS), Springfield, VA. 22161

14. NO. OF PRINTED PAGES 39

15. Price 6.50

USCOMM-DC 6043-P80