NBS TECHNICAL NOTE 710-9

U.S. DEPARTMENT OF COMMERCE / National Bureau of Standards

BUILDING RESEARCH TRANSLATION

Discomfort Due to Wind Near Buildings: Aerodynamic Concepts

NATIONAL BUREAU OF STANDARDS

The National Bureau of Standards[1] was established by an act of Congress March 3, 1901. The Bureau's overall goal is to strengthen and advance the Nation's science and technology and facilitate their effective application for public benefit. To this end, the Bureau conducts research and provides: (1) a basis for the Nation's physical measurement system, (2) scientific and technological services for industry and government, (3) a technical basis for equity in trade, and (4) technical services to promote public safety. The Bureau consists of the Institute for Basic Standards, the Institute for Materials Research, the Institute for Applied Technology, the Institute for Computer Sciences and Technology, the Office for Information Programs, and the Office of Experimental Technology Incentives Program.

THE INSTITUTE FOR BASIC STANDARDS provides the central basis within the United States of a complete and consistent system of physical measurement; coordinates that system with measurement systems of other nations; and furnishes essential services leading to accurate and uniform physical measurements throughout the Nation's scientific community, industry, and commerce. The Institute consists of the Office of Measurement Services, and the following center and divisions:

Applied Mathematics — Electricity — Mechanics — Heat — Optical Physics — Center for Radiation Research — Laboratory Astrophysics[2] — Cryogenics[2] — Electromagnetics[2] — Time and Frequency[2].

THE INSTITUTE FOR MATERIALS RESEARCH conducts materials research leading to improved methods of measurement, standards, and data on the properties of well-characterized materials needed by industry, commerce, educational institutions, and Government; provides advisory and research services to other Government agencies; and develops, produces, and distributes standard reference materials. The Institute consists of the Office of Standard Reference Materials, the Office of Air and Water Measurement, and the following divisions:

Analytical Chemistry — Polymers — Metallurgy — Inorganic Materials — Reactor Radiation — Physical Chemistry.

THE INSTITUTE FOR APPLIED TECHNOLOGY provides technical services developing and promoting the use of available technology; cooperates with public and private organizations in developing technological standards, codes, and test methods; and provides technical advice services, and information to Government agencies and the public. The Institute consists of the following divisions and centers:

Standards Application and Analysis — Electronic Technology — Center for Consumer Product Technology: Product Systems Analysis; Product Engineering — Center for Building Technology: Structures, Materials, and Safety; Building Environment; Technical Evaluation and Application — Center for Fire Research: Fire Science; Fire Safety Engineering.

THE INSTITUTE FOR COMPUTER SCIENCES AND TECHNOLOGY conducts research and provides technical services designed to aid Government agencies in improving cost effectiveness in the conduct of their programs through the selection, acquisition, and effective utilization of automatic data processing equipment; and serves as the principal focus wthin the executive branch for the development of Federal standards for automatic data processing equipment, techniques, and computer languages. The Institute consist of the following divisions:

Computer Services — Systems and Software — Computer Systems Engineering — Information Technology.

THE OFFICE OF EXPERIMENTAL TECHNOLOGY INCENTIVES PROGRAM seeks to affect public policy and process to facilitate technological change in the private sector by examining and experimenting with Government policies and practices in order to identify and remove Government-related barriers and to correct inherent market imperfections that impede the innovation process.

THE OFFICE FOR INFORMATION PROGRAMS promotes optimum dissemination and accessibility of scientific information generated within NBS; promotes the development of the National Standard Reference Data System and a system of information analysis centers dealing with the broader aspects of the National Measurement System; provides appropriate services to ensure that the NBS staff has optimum accessibility to the scientific information of the world. The Office consists of the following organizational units:

Office of Standard Reference Data — Office of Information Activities — Office of Technical Publications — Library — Office of International Standards — Office of International Relations.

---

[1] Headquarters and Laboratories at Gaithersburg, Maryland, unless otherwise noted; mailing address Washington, D.C. 20234.
[2] Located at Boulder, Colorado 80302.

BUILDING RESEARCH TRANSLATION
Discomfort Due to Wind Near Buildings: Aerodynamic Concepts

J. Gandemer

Centre Scientific et Technique du Batiment
Paris, France

Translated by Information Simplified, Inc.
P.O. Box 7439
Alexandria, Va. 22307

for the

Center for Building Technology
Institute for Applied Technology
National Bureau of Standards
Washington, D.C. 20234

U.S. DEPARTMENT OF COMMERCE, Juanita M. Kreps, Secretary

Dr. Sidney Harman, Under Secretary

Jordan J. Baruch, Assistant Secretary for Science and Technology

NATIONAL BUREAU OF STANDARDS, Ernest Ambler, Director

Issued March 1978

National Bureau of Standards Technical Note 710-9
Nat. Bur. Stand. (U.S.), Tech Note 710-9, 48 pages (Mar. 1978)
CODEN: NBTNAE

U.S. GOVERNMENT PRINTING OFFICE
WASHINGTON: 1978

For sale by the Superintendent of Documents, U.S. Government Printing Office, Washington, D.C. 20402
Stock No. 003-003-01898-8 Price $1.60
(Add 25 percent additional for other than U.S. mailing).

Preface

The United States and Frances' Cooperative Program on Building Technology involves an exchange of personnel and information between the Center for Building Technology of the National Bureau of Standards and the Centre Scientifique et Technique du Batiment (CSTB). Information contained in this report was selected for translation and reproduction for sale to the building community by the Government Printing Office. The CSTB papers made public through this Technical Note do not necessarily represent the views of the National Bureau of Standards on either policy or technical levels. Building researchers at the National Bureau of Standards consider it a public service to share with the U. S. building community these insights into some of the research activities of CSTB.

Center for Building Technology
Institute for Applied Technology
National Bureau of Standards

DISCOMFORT DUE TO WIND NEAR BUILDINGS: AERODYNAMIC CONCEPTS

J. Gandemer, Engineer at the CSTB Nantes Laboratory

Cahiers du Centre Scientifique et Technique du Batiment, No. 170,
June 1976 (Cahier 1384)

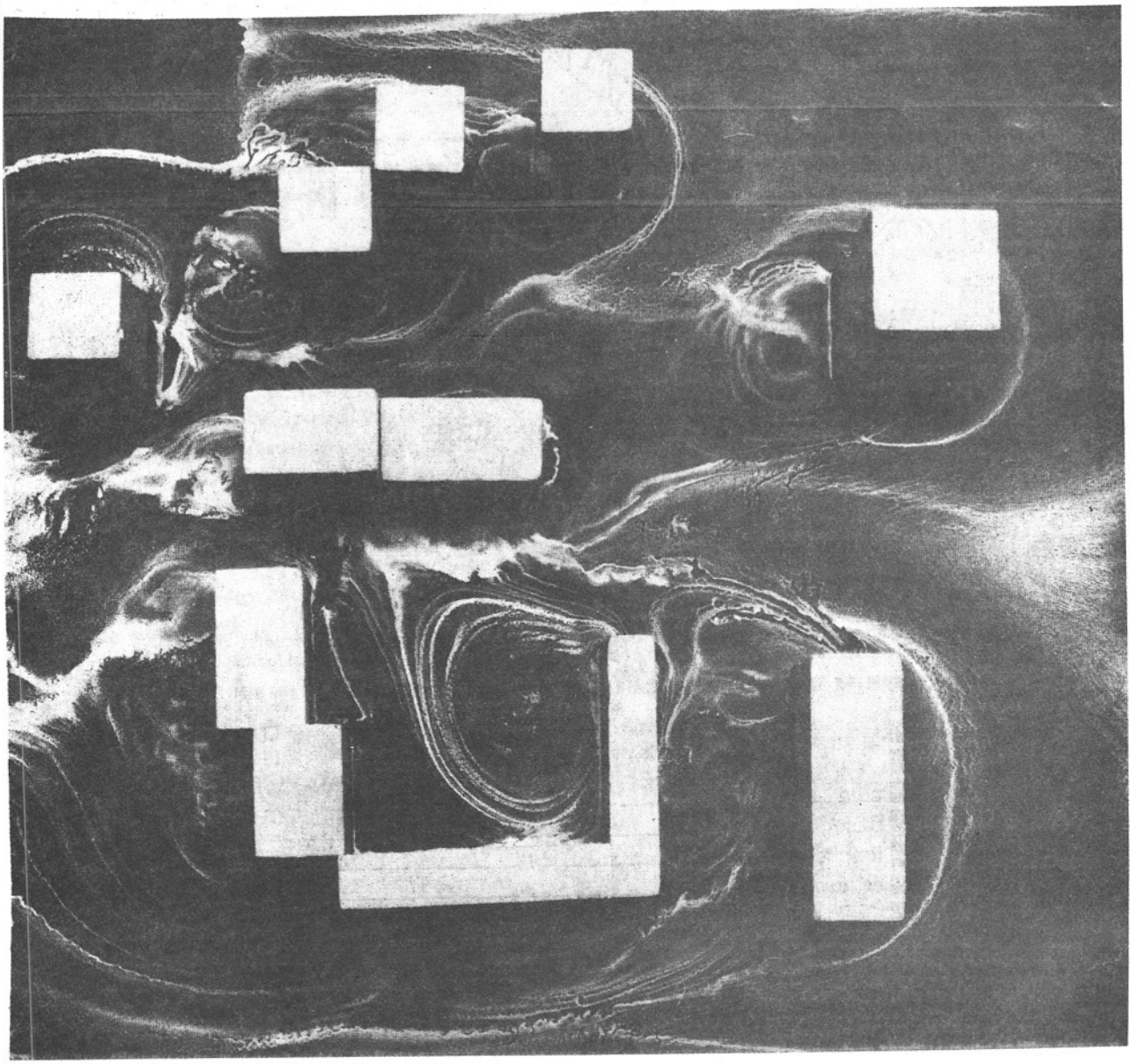

Wakes Made Visible by a Coating Method

DISCOMFORT DUE TO WIND NEAR BUILDINGS: AERODYNAMIC CONCEPTS

J. Gandemer

1. Introduction

Flow patterns at ground level in groups of buildings result from the complex interaction between the wind (impact, average speed distribution with height, and turbulence) and the buildings themselves (shapes, sizes, arrangement, etc.)

The increase in the number of very tall structures and the more or less arbitrary, with respect to wind, installation of large structures have frequently demonstrated the lack of adaptation of the structural environment to wind phenomena. Manifestations at ground level, such as zones of high speeds or eddies, make the approach to buildings uncomfortable (sometimes even dangerous) for the pedestrian.

Elimination of these problems requires better knowledge of air flows around structures and formulation of practical plans that the architect or city planner can use in designing larger structural units.

*References are on page 37. Appendix I on page 38. Appendix II on pp 39-41.

This article summarizes work carried out at the CSTB institute in Nantes in 1973 and 1974 and gives the main results of our study [1, 2].

Also, a guide was drawn up [3] which gives simple rules or practical advice that can be used by architects and city planners.

2. General Behavior of Wind around Structures

Flows that occur at ground level result from the complex reaction between the wind and structural masses. The effect of structures on the flows depends on their shape, size[1/], and juxtaposition by establishing the distribution of different pressure zones around the obstacles (Figs. 1-3).

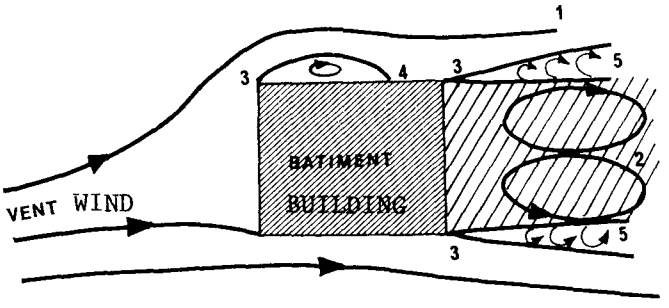

Fig. 1. Geometry of "wind" flow in passing a parallelpiped obstacle. (1) Flow line; (2) wake and vortical circulation; (3) separation point; (4) recombining point; (5) thickening of separation limits between wake and flow.

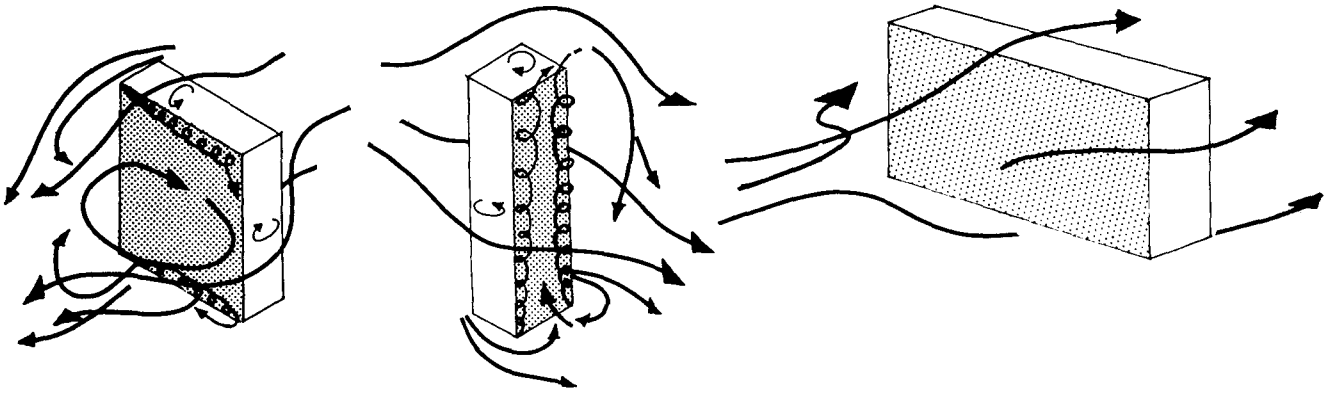

Fig. 2. Fluid circulation around structures of different geometries.

[1/] Generally speaking, the larger the dimensions of the structural masses (particularly height) relative to the scale of the wind (dimensions of the gusts), the greater their role in the shaping of the flow.

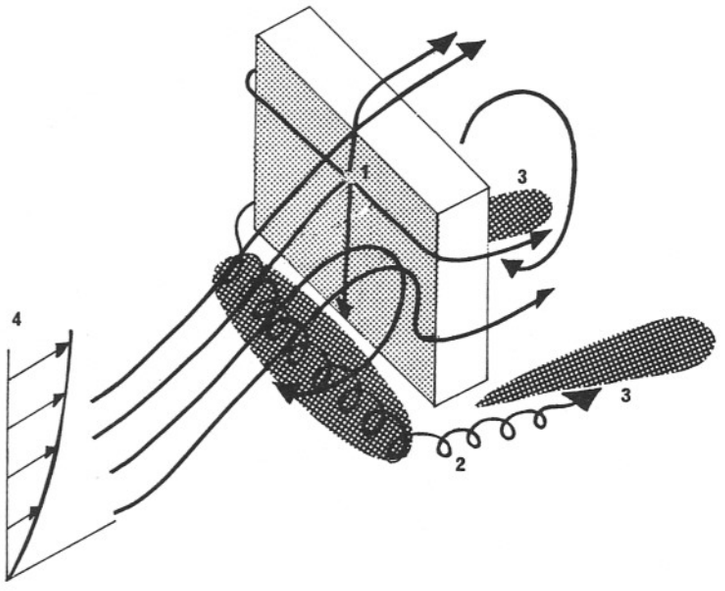

Fig. 3. Flow patterns around a building or a vertical average-rate gradient. (1) Separation point; (2) vortical roll; (3) lateral vortical zone; (4) vertical average-speed gradient.

As a result, every mutual positioning of these zones leads to the appearance of flows (high pressure to low pressure).

On the windward face of a large obstacle the wind causes overpressure distribution as an increasing function of height depending on the vertical gradient of average speed. Further, a flow descends along the forward face and upon meeting the ground forms a vortical roll (Fig. 3); strips of air are forced to pass around the obstacle, and in the wake starting at the separation lines along sharp edges, low-pressure zones appear which are relatively constant with height and essentially related to the speed at the top of the building. The juxtaposition of air volumes at different pressures due to arcades, under buildings or around corners induces very rapid local flows more or less associated with violent eddies.

Finally, structural elements, by their juxtaposition, can form wind deflectors that channel the air in narrow passages where flow is locally accelerated.

In overall plan the shapes do not act individually, and the different types of flow mentioned above combine in a way that depends on the properties of the incident wind and the topography of the site. The result is therefore particularly complex.

3. Review of Wind Properties [4-6]

Wind is a flow of air which tends to equalize different pressure zones in the atmosphere. At low heights, it has a significant "agitation" or turbulence. Thus, at a given point the speed of the wind will fluctuate in magnitude and direction.

The instantaneous speed of the wind at a point can be expressed by two terms:

$$U_z(t) = \overline{U}_z + U'_z(t)$$

where $\overline{U}_z$ is the average speed[1/] (for example, during a period T = 10 minutes) at a height z above the ground and $U'_z(t)$ (a function of time) is the corresponding fluctuation (Fig. 4).

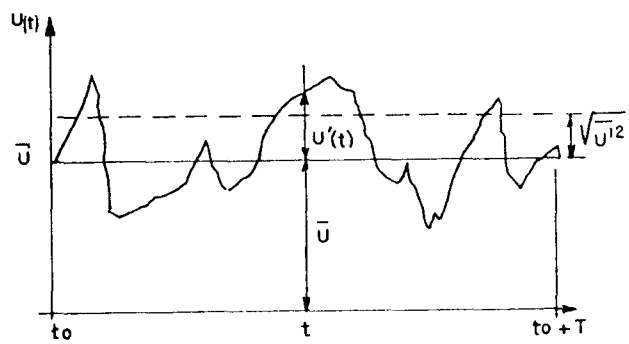

Fig. 4. Instantaneous recording of wind.

Turbulence, i.e., fluctuation of the speed around its average value (for the period T), can be characterized statistically by its standard deviation, $\sigma = \sqrt{\overline{U'^2}}$

The average speed at ground level (in the case of non-mountainous terrain), because of friction with the ground, increases with height to a

---

[1/] The values with a bar above are average values during a period T.

height of z_G (thickness of the atmospheric boundary layer), where it becomes constant and equal to $\overline{U}_G$ ("gradient speed").

When winds blow, the stability conditions of the atmosphere are generally neutral. Thermal phenomena can be neglected, and the increase in the average speed with height z ("vertical gradient of average speed") can be represented by

$$\overline{U}_z/\overline{U}_G = (z/z_G)^{\alpha}$$

The parameters z_G and α depend essentially on the type of roughness encountered by the wind.

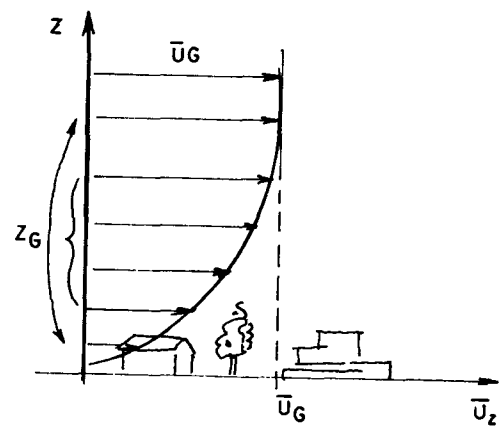

Fig. 5

The standard deviation, σ, in the lower layers depends essentially on, and increases with, roughness. It decreases slowly with height.

To be able to characterize the wind completely, we have to introduce the concept of spatial scale of turbulence (dimensions of gusts in space).

The dimensions of puffs or gusts of wind define the "dynamic" scale of the latter (longitudinal and transverse scale). This is a function of height and roughness. The scale is generally determined from correlated measurements between different points in space.

4. Criteria of Comfort

4.1 Concept of Comfort

The speed and changing behavior of the wind affect:

--The "physical" comfort of man: The forces induced by the wind vary in time and space and act mechanically on the "human body obstacle," hinder his movements, disarray his clothing, etc.

--"Thermal" comfort of man: Physiological heat exchange between the human body and the ambient medium are disturbed.

These two concepts will always be subjective, because, in general, comfort or discomfort due to the wind depends on:

--The activity of the individual (comfort desired on a restaurant terrace is different from that wanted on a pedestrian walk);

--The climate (in some latitudes we may even want an increase in some of the wind effects such as natural ventilation) and the season, depending partly on the garments worn;

--Meteorological conditions (temperature, precipitation, sunlight, humidity, etc.);

--Physical (e.g. age) and psychological state of the individual.

The Beaufort scale (Table 1) gives some information on the manifestations of wind as a function of speed and the sensations felt.

Table 1. Beaufort Scale

Force	Wind speed, m/sec z = 2 m	Wind characteristics
2	1.5-3	The face feels the sensation of the wind Leaves rustle
3	3-4.5	Leaves and small twigs in continual movement Wind unfurls flags constantly Hair is disarranged and loose clothes blow in the wind
4	4.5-7	Dust and papers are lifted Branches are shaken and hair is very much blown about
5	7-9	Small trees and their leaves are blown about and walk is affected slightly
6	9-11	Large branches are put in motion and the wind makes telephone wires sing; umbrellas are used with difficulty and walking becomes very much affected
7	11-14	Trees are in constant movement and there is great difficulty in walking against the wind

Table 1 continued

Wind speed, m/sec		
Force	z = 2 m	Wind characteristics
8	14-17	Tree branches break In general, pedestrian movement is very difficult and dangerous
9*	17-20	Risk of violent throwing to the ground as a result of squalls

*The concept of comfort is not the same as that of safety. The danger threshold which corresponds to the force which tends to throw one to the ground is based entirely on mechanical and aerodynamic considerations (balance, weight, position, etc.) and in general corresponds to speeds of some 15 m/sec.

The definition of a criterion of comfort is thus a difficult problem and it seems improbable if not impossible that a single criterion can be introduced that can be universally used for all effects cited above.

At the present state of our knowledge, observations and experiments made on site and in the laboratory indicate the basic role played by speed and turbulence in human comfort.

— — When the wind blows it creates a force (proportional to the square of the speed) which affects the pedestrian and he overcomes it or compensates by his bearing. The higher the wind speed, the more he will have to fight the wind and the greater will be the discomfort. The discomfort is directly related then to the level of the force due to the wind and will be characterized by the modulus of the average speed, $\overline{U}$.

— — The wind (or flows induced between structures) is a variable magnitude:

— The wind varies from one point to another. It is sufficient to move around within a tall group to see the coexistence of very calm zones with zones of rapid flow or even of strong turbulence; hence strong horizontal gradients exist.

Strong horizontal speed gradients [characterized by the ratio $(\overline{U}_2 - \overline{U}_1)\Delta y$] are reflected in a large change in speed moduli in very little space (example: at the corners of tall buildings).

The higher the ratio, the more rapidly the pedestrian must adapt himself and the more the discomfort increases (Fig. 6).

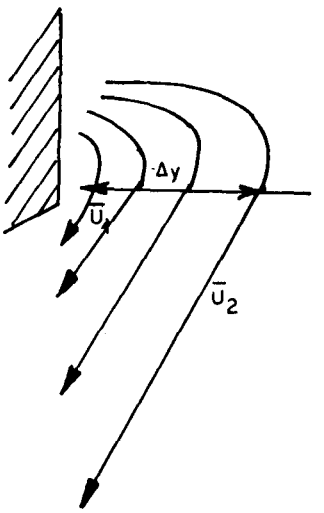

Fig. 6

—— The wind varies in time: Thus, even when standing still, the pedestrian, considering the phenomenon of wind gusts, will be subjected to a flow (and thus a force) which varies in intensity and direction with time.

This property of variability or instantaneousness makes it necessary for the pedestrian to constantly adapt himself, to a new situation and causes the main discomfort in walking and maintaining equilibrium, the disarrangement of clothing and hair, the use of an umbrella, etc. The turbulence level of a flow, σ, characterizes the concept of wind variability.

As a result, for our criterion of comfort as well as the adjustments required or even for practical advice, we take into account only the discomfort due directly to the "wind phenomenon." This is characterized locally by the average speed and turbulence. Other aspects such as the ambient temperature, the psychology of the individual, etc. are not included in our criteria.

Nevertheless, the comfort criterion will be associated with the local climate in the form of a discomfort frequency (number of times the discomfort threshold is exceeded in relation to the season, the wind direction, etc.) at each point on the overall plan.

4.2 Descriptive Parameter for the Discomfort due to Wind [7-13]

Available quantitative data on comfort are definitely not sufficient and additional studies are needed. However, considering the importance (see section above) of the average speed ($\overline{U}$) and turbulence (standard deviation $\sigma = \sqrt{\overline{U'^2}}$), we suggest characterizing the speed field locally by the simplest possible grouping, $\overline{U} + \sigma$.

It should be mentioned that recent work done by J. C. Hunt [11] indicates the preponderant role of turbulence as compared to average speed in the effect on human comfort. J. C. Hunt [10] proposes the grouping $\overline{U} + 3\sigma$. Recently, A. G. Davenport [12] suggested $\overline{U} + 1.5\sigma$

For the present we are using the simple grouping $\overline{U} + \sigma$, but it should be noted that our results will be easily transposable if in the future it seems that a more "refined" combination should be adopted between the average rate and the deviation.

In wind tunnels the grouping $\overline{U} + \sigma$ (which corresponds to a flow at ground level or on a balcony) can be expressed adimensionally in the form of the comfort parameter, ψ (at height z_r),

$$\psi = \frac{\overline{U} + \sigma}{\overline{U}_r + \sigma_r}$$

where $\overline{U}_r$ and σ_r are the average speed and standard deviation at the reference point, defined at the same height as that of the measurements $\overline{U}$ and σ but without the structures (Fig. 7).

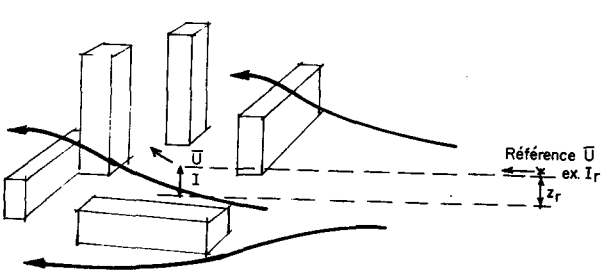

Fig. 7

NOTE: The direction of the flow relative to pedestrians has an especially critical effect when the flow is ascending (with transport of aerosols).

Strong horizontal speed gradients have a showy effect on pedestrian discomfort, essentially if the pedestrian is moving.

These particular phenomena are not included directly in our comfort parameter but are specified in the study of "aerodynamic anomalies" (Sect. 7).

4.3 Comfort Threshold - Discomfort Frequency

4.31 Comfort Threshold

When the discomfort threshold is introduced, the values commonly assumed are the following:

$\overline{U} < 5$ m/sec - start of unpleasant manifestations such as raising of dust, irritation of the eyes, disarray of hair, etc. and with a standard deviation of $\sigma = \sqrt{\overline{U'^2}}$, corresponding to that at ground level in open country and which is related to the average local speed by

$$\sigma \simeq 0.2\ \overline{U}$$

The comfort condition to be observed is then written

$$\overline{U} + \sigma \leqslant 6 \text{ m/sec}$$

4.32 Concept of Discomfort Frequency

A discomfort threshold by itself has no meaning if we do not relate it to the frequency of discomfort, that is, the percentage of the time that the threshold is reached or surpassed. Depending on the different activity zones in an overall plan, the acceptability or nonacceptability of a given frequency differs. One can readily tolerate locally a surpassing of the threshold for 50% of the time, e.g., if the zone in question is not accessible to pedestrians (automobile access corridor, etc.), while on the

other hand we would want a discomfort frequency of no more than a few percent on a restaurant terrace. The designer thus plays the most important part in this choice.

4.33 Calculation of the Discomfort Frequency

We mentioned above that the local discomfort in a building grouping is expressed as the frequency with which the discomfort threshold is exceeded. This necessitates a series of measurements on site, which consists in "calibrating" the site with respect to the meteorology station and a study in a wind tunnel, for example, in order to obtain locally the parameters of comfort (ψ or a similar form) which allows finding the discomfort frequencies.

First Phase. Comparison of the site with the nearby meteorology station, which is assumed to be representative (Fig. 8)

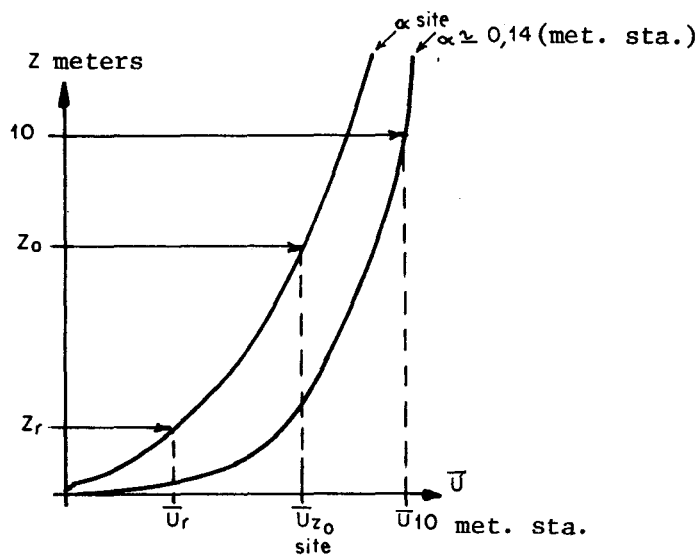

Fig. 8

The simultaneous measurement of the wind at the site and the station at z_o and at 10 m allows determining experimentally the coefficient of correlation, k. This can be estimated theoretically (see Appendix 1), but it is much preferable to measure it.

$$\overline{U}_{z_o}\ \text{site} = k\overline{U}_{10}\ \text{met. sta.}$$

The height z_o is any relative height and is adapted as well as possible to the nearby environment so that the measurements made are meaningful.

Maintaining the reference speed $\overline{U}_r$ defined above, we obtain

$$\overline{U}_r = k(z_r/z_o)\overline{U}_{10}\ \text{met. sta.}$$

where α [see Fig. 8] is the exponent of the vertical gradient at the site.

The parameter of comfort, ψ, takes the form

$$\psi = \frac{\overline{U} + \sigma}{k\left(\frac{Z_r}{Z_o}\right) \overline{U}_{10\ \text{météo}}^{**} (1 + I_r)}$$

where $I_r = \sigma_r / U_r$, the intensity of the turbulence at the reference point measured experimentally (on the ground or in a wind tunnel, for example).

Second Phase. Laboratory Study

We have seen that the dimensionless ψ values can be obtained in the laboratory provided that the simulated wind has, at the scale of the model and depending on the wind direction, the static and dynamic properties that prevail at the site, and provided that the nearby environment is taken into account.

Third Phase. Presentation of Results of Discomfort Frequency

The statistical data from the nearby meteorology station are expressed in terms of speeds $\overline{U}_{10\ \text{meteo}}$ with annual frequencies below the threshold. (The below-threshold frequencies may be broken down according to the season, the hour, the day, the wind direction, etc.)

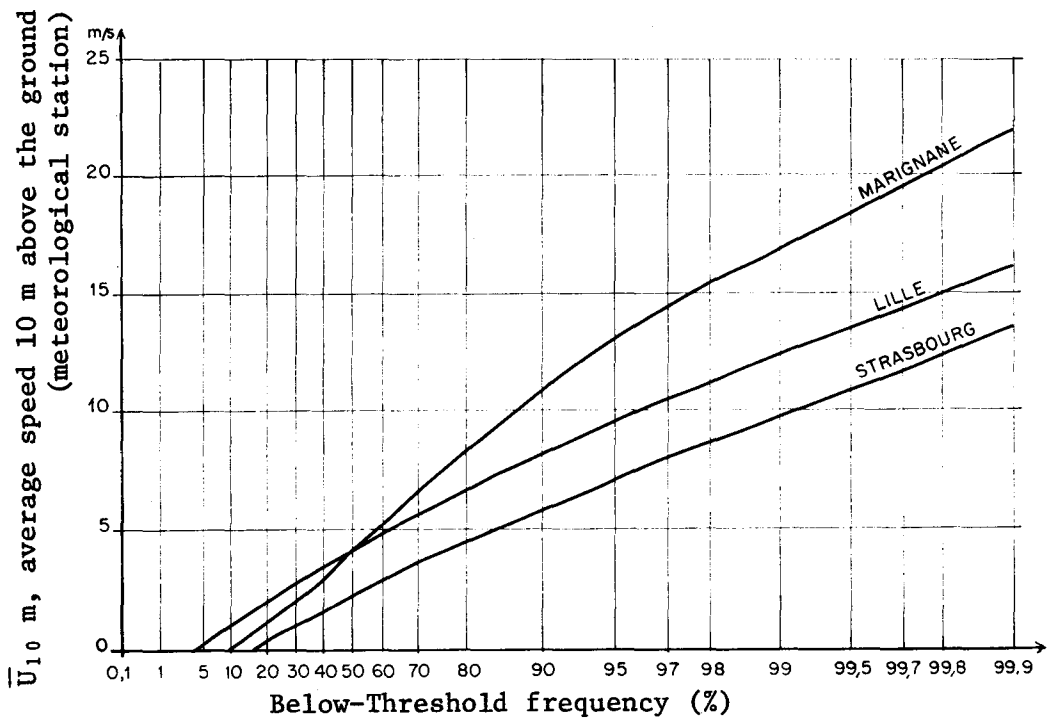

Fig. 9. Example of statistical data for three meteorological stations, all wind directions together

**Note: meteo ref. meteorological station (also met. sta.)

Example:

The $\overline{U}_{10\ meteo}$ = 10 m/sec speed at the meteorology station of:

--Strasbourg will not be exceeded 99% of the time, and will thus equal this or more 1% of the time;

--Lille will be exceeded 4% of the time;

--Marignane will be exceeded 13% of the time.

The discomfort threshold is such that $\overline{U} + \sigma = 6$ m/sec, and therefore such that

$$\overline{U}_{10\ meteo} = \frac{6}{k(z_r/z_o)^{\alpha}\ (1+\ell_r)\psi_j}$$

If locally, at point j on a general plan the comfort parameter is ψ_j, the local frequency for exceeding the discomfort threshold $(1 - F_j)$ will be obtained graphically from the statistical data for

$$\overline{U}_{j\ 10\ meteo} = \frac{6}{k(z_r/z_o)\alpha\ (1+\ell_r)\psi_j}$$

Thus, this procedure permits relating the adimensional comfort parameter at each site to the point considered. This frequency can also be weighted as a function of weather (season, etc.), the predominant wind directions, and the roughness around the site.

5. Overview of the Studies

5.1 Progress of the Study Made at CSTB

--The wind-tunnel studies simulating the natural wind of the velocity field in a particular spatial plan allow its optimization, taking into account knowledge of the neighboring environment, prevailing winds, etc. but the solutions proposed are not generalizable to other cases, being too specific and too detailed. However, all progress in studying the "school case," where the anomaly is simplified, isolated, and extracted from its practical context, does indeed make it possible to discover the parameters which can enter into the quantification of the anomaly, but it represents an approach that is much too theoretical to be generalizable.

--The study made at the CSTB Nantes Facility is viewed entirely differently from the studies mentioned above.

We started with standardized spatial plans in sufficient number, representing existing or proposed structures, and subjected them to different wind directions with different types of wind, measuring the characteristics of the velocity field. Then we tried to explain statistically the correlations between the high or low values of ψ and the geometry, the arrangement of the buildings, etc., and finally the means of controlling ψ.

It should be remembered that the effects or anomalies presented below are not isolated cases but were obtained as the result of general behavior patterns seen in realistic structural environments. It is evident that a study taking into account the topography, the wind force distribution, direction, etc. of a particular spatial plan would lead to a high level of information detail, higher than that we gave, since only the general flow patterns are given here with the order of magnitude of the discomfort.

5.2 Choice of Spatial Plans

In order to be as realistic as possible, our study was made in collaboration with CRMAA architects (CRMAA = Centre de Recherches Methodologiques d'Architecture et d'Amenagement), especially with regard to the choice of spatial plans, because of their being representative of contemporary and future construction methods.

Twelve spatial plans were finally selected, taking into account their aerodynamic interest, namely

--The ease of "reading the aerodynamic phenomena,"

--The unity of the spatial plan over a sufficient area (300 x 500 m),

--The "flattest" topography possible,

--The average height of the tallest structures,

--The maximum density of the most typical aerodynamic anomalies,

--The least known aerodynamic shapes.

We can cite, as an example, the classes of construction in "rows," in "cells," on "piers," in pyramids or disconnected, in old structural milieux, in groups of tall buildings, of rounded shape, etc. (see the cover photo and the photos below).

Spatial Plans

In rows

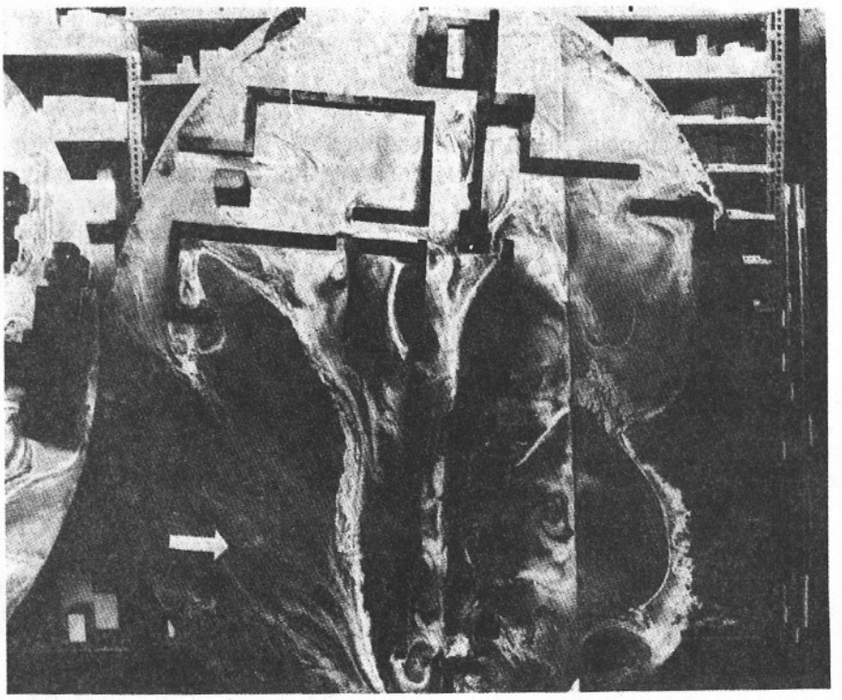

In units

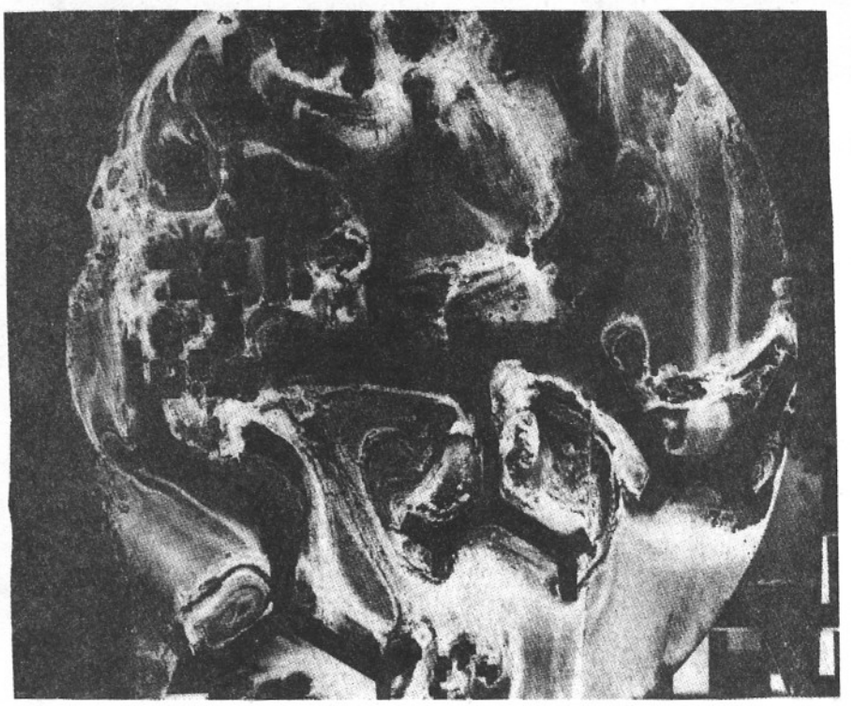

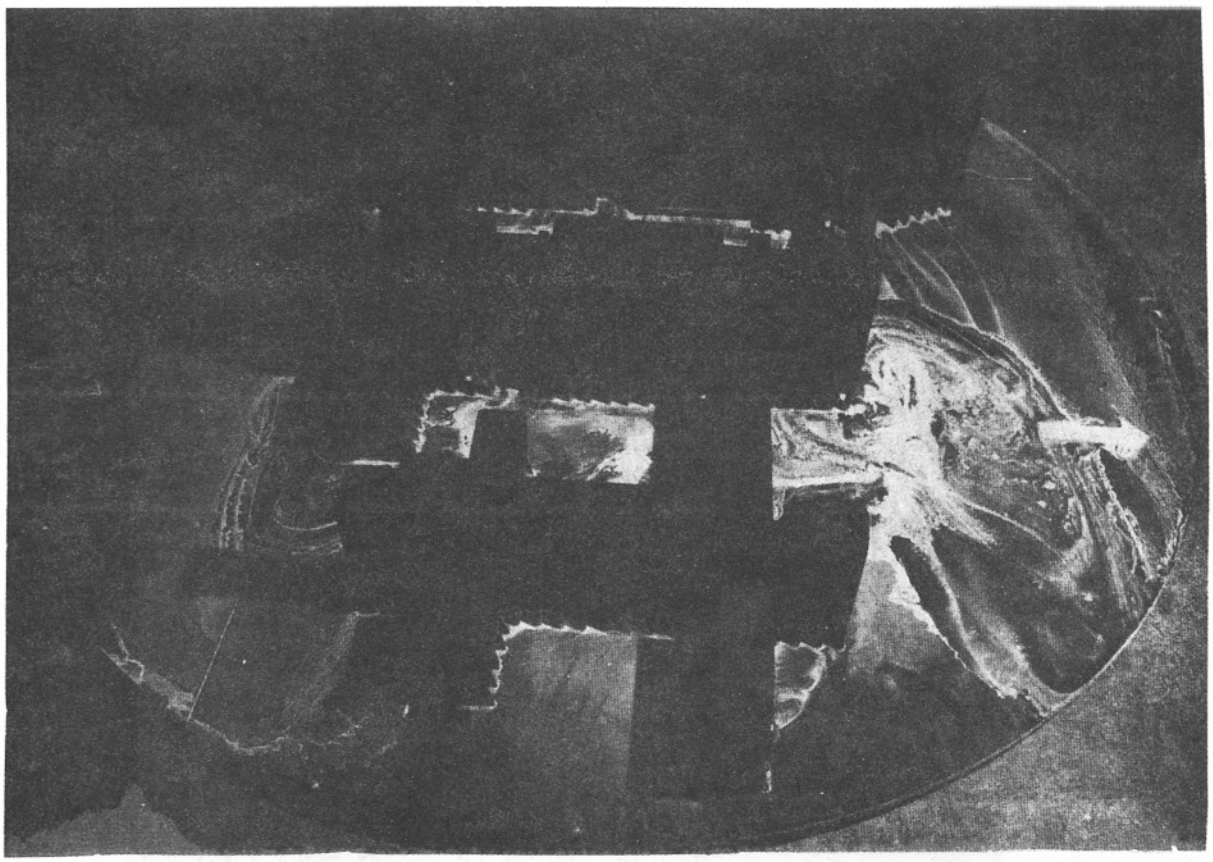

On piers

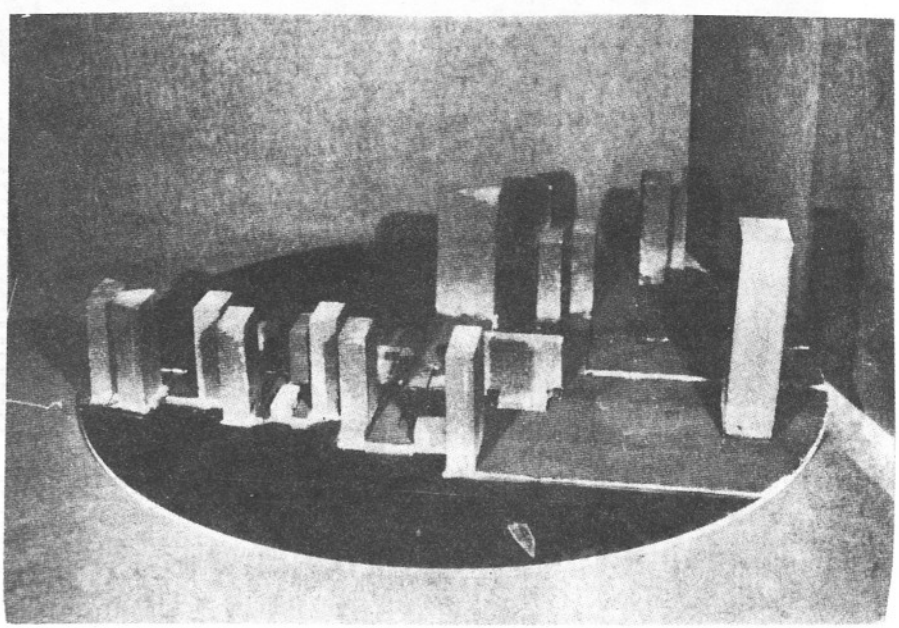

Group of tall buildings

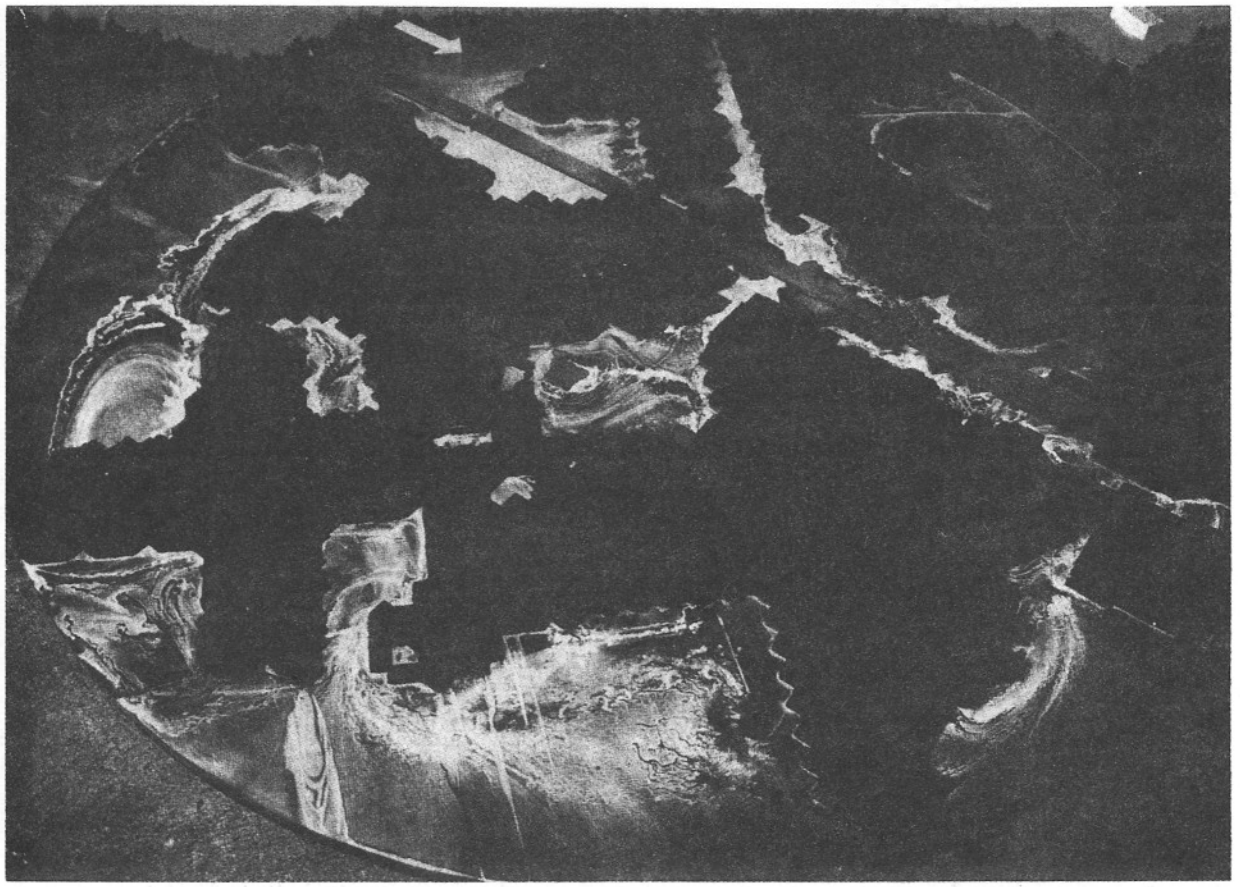

Pyramids

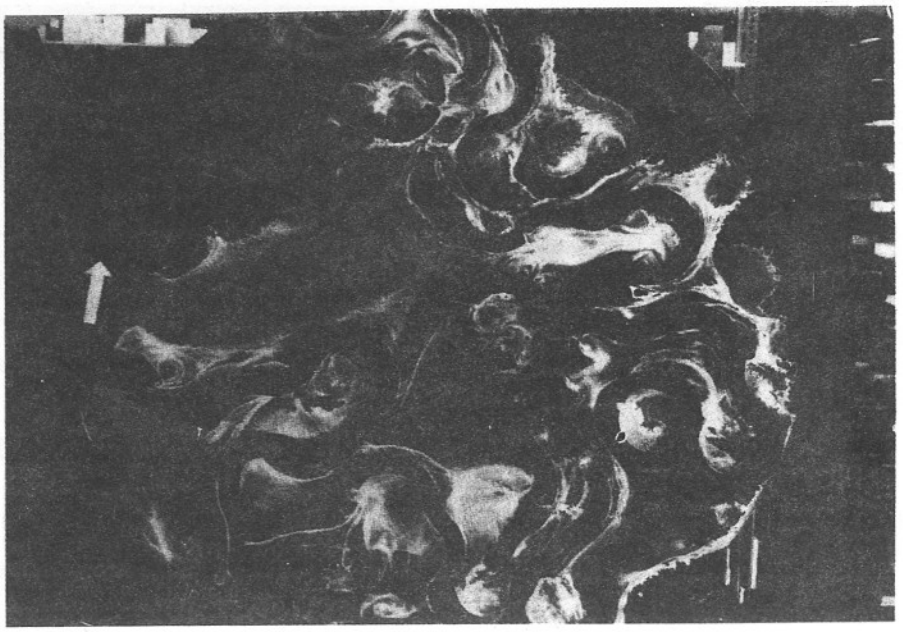

Rounded shapes

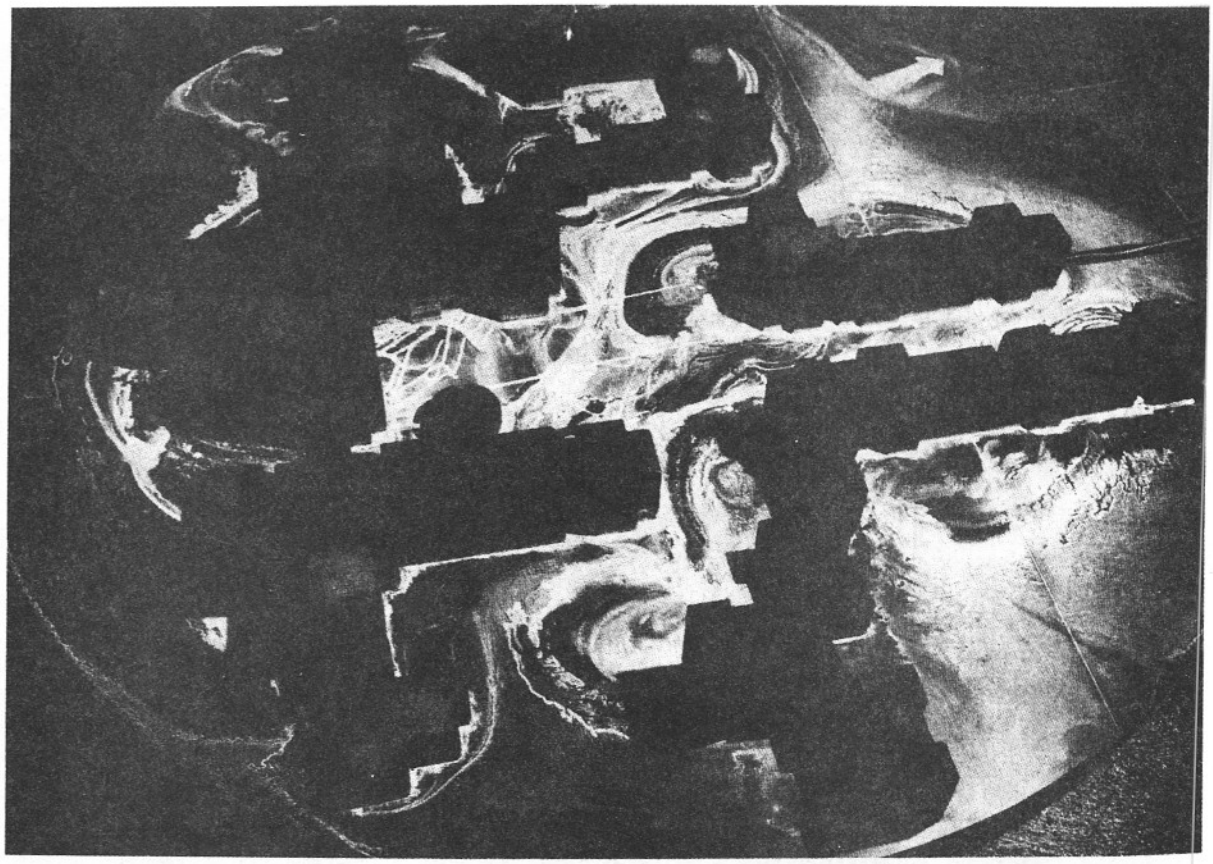

Not connected

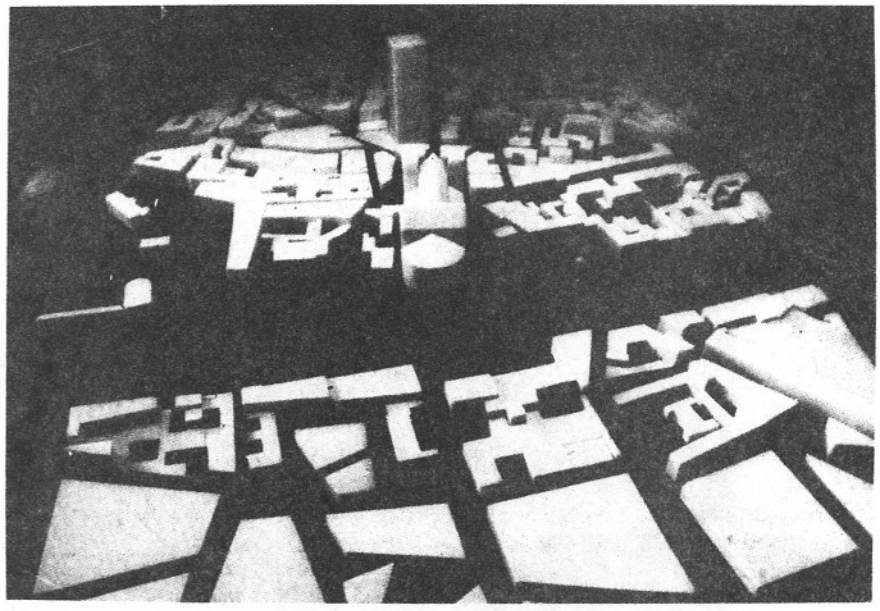

Old structural
environment

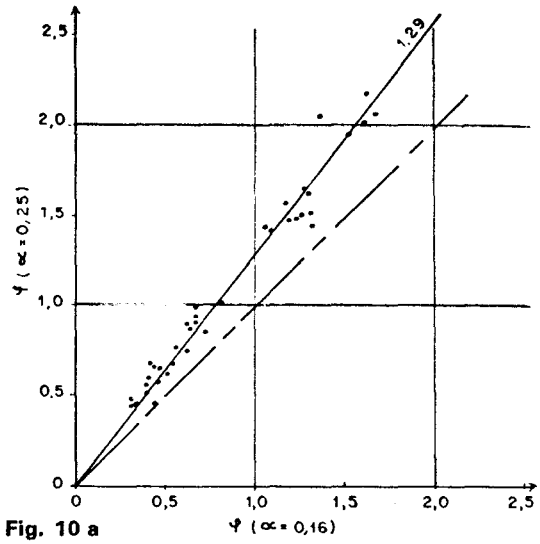

Fig. 10 a

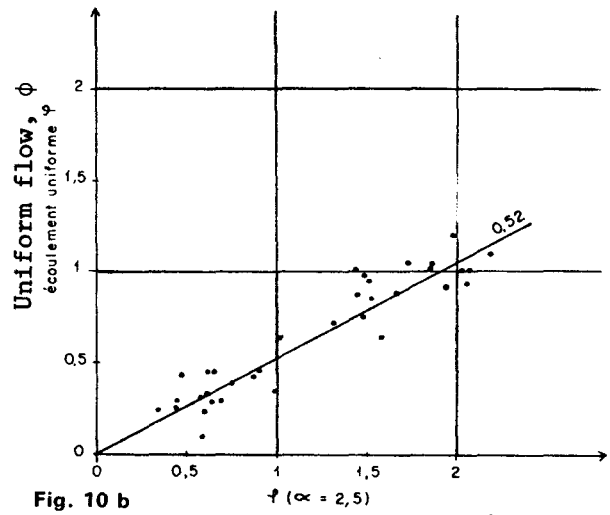

Fig. 10 b

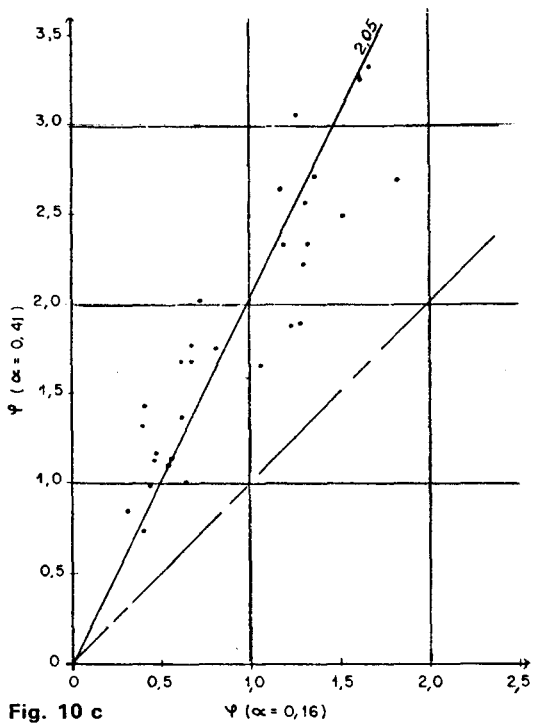

Fig. 10 c

Fig. 10 Graphical correlation of the parameter ϕ obtained for (a) wind in a suburb and wind in open country; (b) wind in a suburb and with uniform flow; (c) wind in the city and wind in the open country.

6. Experimental Study

6.1 Importance of Good Reproduction of Wind in a Wind Tunnel: Effect of Gradient

We know the determining role of the average-speed vertical gradient which fixes the distribution of pressure around obstacles [4] and there establishes the flows. We also know the role of turbulence, which tends to reshape the separated flow by widening the wake (Fig. 1) and which by its level (intensity of turbulence) or size (scale of turbulence) partly governs the development of turbulence in the wakes.

By way of example and to show the importance of good reproduction of the wind phenomenon, we subjected the same spatial plan with the same incidence to four flows--a flow as uniform as possible, and three flows reproducing to scale the winds of open country ($\alpha \simeq 0.16$), suburbs ($\alpha \simeq 0.25$), and city ($\nabla \simeq 0.41$). (The corresponding gradients were measured in the presence of the model.)

If we set the ratio

$$\varphi = \frac{\overline{U} + \sigma}{\overline{U}_r} = \frac{\overline{U}\,(1 + \ell)}{\overline{U}_r}$$

where $\ell = \sigma/\overline{U}$, the intensity of the turbulence (at the reference level), and if we study the correlation (for the same points on a spatial plan) between the values of ϕ and ℓ obtained for wind of the suburban type and uniform flow, we find that (Figs. 10 and 11) the values of ϕ are greatly undervalued in uniform flow (on an average, undervalued some 100%), and the same is true for turbulence (some 30%). This latter point shows the role of turbulence upstream on the properties of the velocity field.

Further, by observing the relatively high dispersion of the measurement points (especially ℓ), it seems extremely difficult, and more than one can expect, to draw quantitative conclusions about the velocity fields in a group of buildings if the wind tunnel used does not correctly reproduce the static properties (gradient) and the dynamic properties (turbulence) of natural wind.

Correlations between the values of ϕ and ℓ obtained for wind in open country and wind in a suburb or city (Fig. 10) show the very marked effect of roughness (exponent α) on the factor ϕ. The role of the exponent α relative to turbulence is less marked (Fig. 11), but the

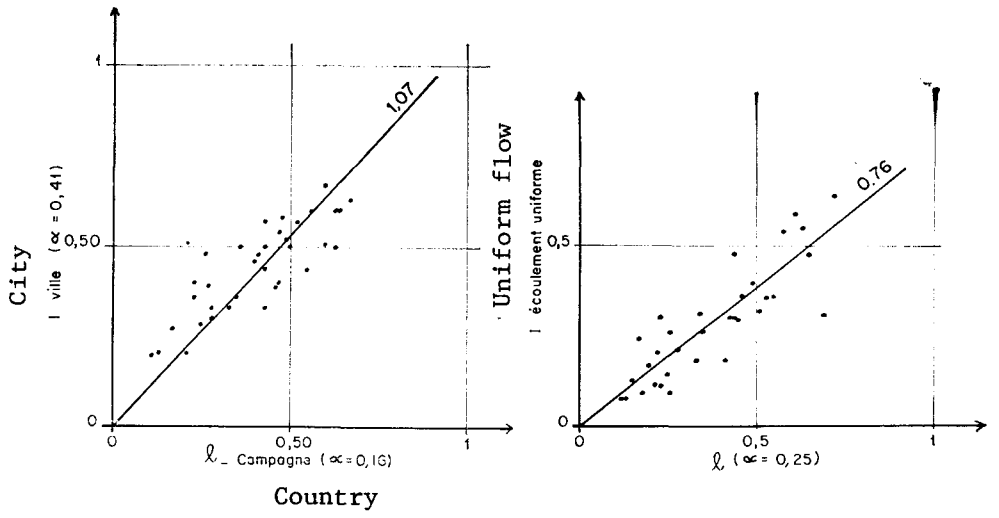

Fig. 11. Graphical correlations of parameter ℓ obtained for wind in the city, in the suburbs, and in open country.

dispersion of the points is still high, which emphasizes the importance of upstream turbulence relative to the velocity field.

The parameter ϕ, defined above, is equally sensitive to α but less so than ϕ, taking into account of the fact that the intensity of the turbulence, ℓ_r, increases with the roughness.

In conclusion, it appears essential to reproduce in the wind tunnel as closely as possible the natural wind at the scale of the models. Therefore the standard aerodynamic wind tunnels (regular, uniform flow) cannot properly be used except for essentially qualitative purposes. It should be noted that if we want to use the results obtained in a wind tunnel in an actual case and use them very correctly, the "particular" properties of the wind corresponding to the site studied must be reproduced exactly.

IMPORTANT NOTE: The overall plan studied shows the average heights of buildings between 15 and 35 meters high. If we assume that around a height of 40 meters we eliminate some of the roughness effect, we can find the parameter

$$\phi = \frac{\overline{U}(1 + \ell)}{\overline{U}_{40\ \text{site}}}$$

where the velocity $\overline{U}_{40}$ is the average velocity obtained at a height of 40 m above the site.

We find that for an average of the measurement points, the parameter ϕ_*avg. is practically the same for our different types of flow:

$$\phi_* avg = \phi_{avg.} (Z_r/40)^{\alpha}$$

As a result the same average wind at 40 m from the ground produces, on an average (but on an average only) the same discomfort.

It is evident that confirmation of this tendency will be needed for other spatial plans.

This note allows us, however, to consider (Appendix 2) a weighting of the ψ values (measurements with a gradient of $\alpha = 0.16$) as a function of the upstream roughness.

6.2 Test Conditions and Technology of Measurements

6.21 Wind Tunnel

The wind tunnel of the Nantes CSTB Facility (photo below) allows correct simulation of the static and dynamic properties corresponding to the three wind types with neutral stability in the scale range of 1/75 to 1/400 [1, 2, 14]. For this simulation we use several arrangements, together or not: turbulence generator and secondary blower located at the tunnel entrance, tunnel floor roughness, and random pulsing of the average flow. The purpose is to control with the arrangements both the vertical distributions of the turbulence scale and its intensity, and the vertical gradient of the average speed.

NOTE: In our measurements of the velocity field we used models whose scale could vary from 1/400 to 1/200 (and therefore the corresponding wind scale). As a result, Z_r varied from one test to the next but always corresponded to a true height of 2 to 3 m relative to the pedestrian level.

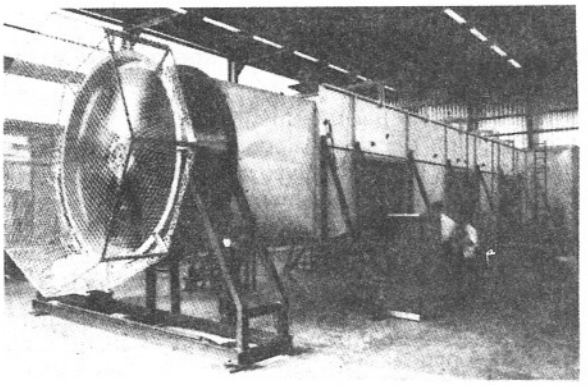

Wind tunnel at CSTB, Nantes

6.22 Choice of Incident Winds

We saw above how important it is to have good reproduction of the wind properties. Therefore it was necessary to test the spatial plans for wind in open country and in a suburb. Because of the length of the tests, we had to limit them to wind of the open-country type, this being used because of its simplicity relative to reproduction of the environment immediately upstream.

For all the 12 spatial plans studied for different orientations, the exponent of the power law for the average speed gradient varied from 0.16 to 0.19 (wind of intermediate type, i.e., open country--low suburb).
NOTE: Taking into account the note appended to the preceding section, we consider in Appendix 2 an approximate correction which allows gross application for suburb winds of the values of the velocity field obtained for "open country" wind.

6.23 Technology of Measurements

For each spatial plan studied, subjected to several wind orientations (open country--low suburb type) we made the flows at ground level visible by a coating method (kaolin suspended in alcohol, cover photo). Then, taking into account the qualitative information thus obtained, we located as judiciously as possible the anemometer probes, imposing a coordinate grid on the spatial plan in order to obtain the local quantitative properties at all points.

The quantitative measurements were made chiefly with a hot-wire anemometer so that with a very turbulent flow this technology somewhat overvalues the turbulence intensity. The vertical hot wire does not "see" the vertical components of speed when they exist. (Near the ground we could confirm that the flow is strongly bi-dimensional and that therefore the hot-wire measurements are significant.) Hence, in the study of some aerodynamic effects we used a chronophotographic quantitative visualization method [15].
NOTE: The model, by its presence in the experimental tunnel, forms an obstacle and modifies the flow even before it is reached ("climbing" of the perturbations in subsonic flow). Therefore the properties of the flow depend on the immediate environment, upstream, lateral, or even downstream. With regard to the zone of influence of the immediate

environment on the point considered, a faithful reproduction of the spatial plan is not necessary. This can be replaced by a collection of irregular heights of appropriate sizes, distributed in random fashion, and giving "totally," in association with the simulation techniques discussed above, the properties of natural wind. Therefore we have not included in our discussions the measurements made at the points where, locally, the immediate environment is not correctly reproduced along a sufficient radius (4 to 5 times the average local heights). This is the case, for example, of points located at the periphery of the overall plan (too close to the wall of the tunnel).

7. Presentation of Results Obtained in the Wind Tunnel

In the study of different parts of spatial plans we were able to identify several aerodynamic effects which can, in their structural context, cause zones of discomfort or comfort relative to the wind phenomenon.

We recall that quantification of the different effects by the values of the parameter ψ correspond to an average behavior of the aerodynamic phenomena for a wind of the open-country type and in the absence of topography.

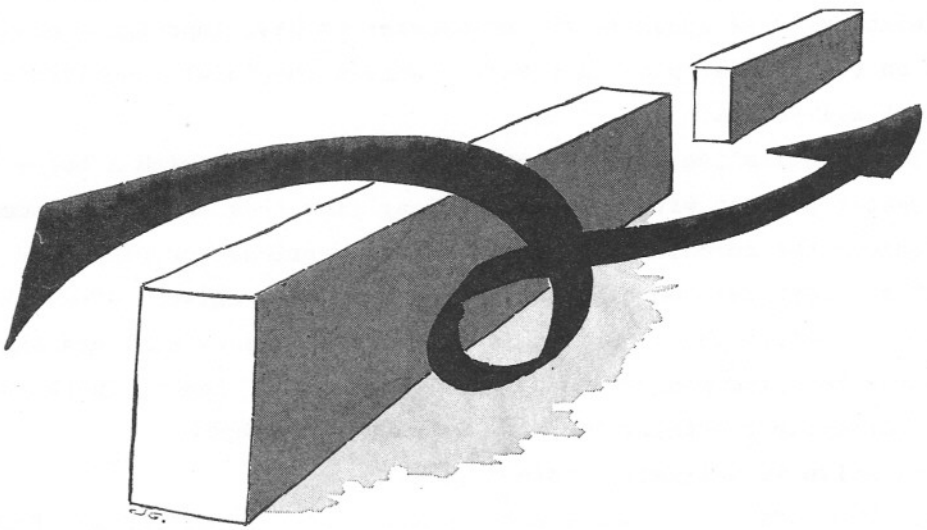

Row Effect

We define as a "row" a parallelepiped construction of rather small thickness (10 m), of a homogeneous height not exceeding 30 m (10 stories),

and a minimum length of 8 times the height.

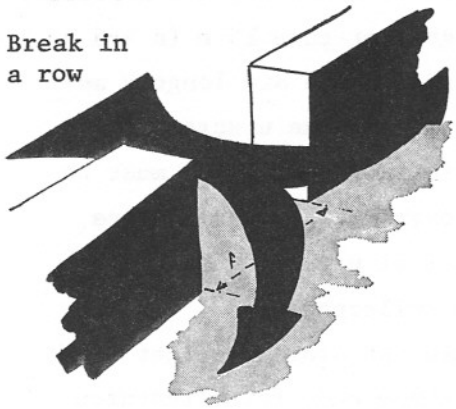

In general, the immediate environment plays a critical role only if its height is less than that of the row or the immediate environment is not itself a parallel row (only the first row toward the wind then acts as a row).

For an incidence $\theta = 45°$ considered critical relative to the wind, and if the row height is around 15 to 25 m, most of the wind will "step over" the row and spiral behind the building, creating a central zone of high speed where the comfort parameter, ψ, reaches 1.4. A way to reduce and even to suppress the effect of the row is to arrange the rows orthogonally with one or several built-in irregularities.

When there are openings in the rows, in orthogonal angular relation to the wind, the comfort parameter, ψ, may there reach the value 1.3 when the width of the opening is critical, i.e. it is between 1 and 2 times the height of the row.

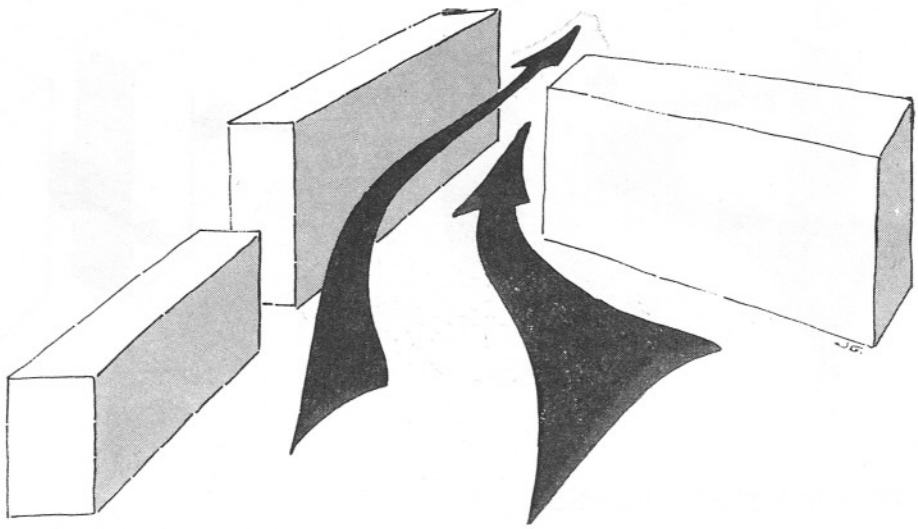

Venturi Effect

The Venturi effect is a collector or funnel phenomenon created by two structures that are not joined. The axes of the two make a right or acute angle. The critical zone for comfort is at the neck or narrowing of the Venturi.

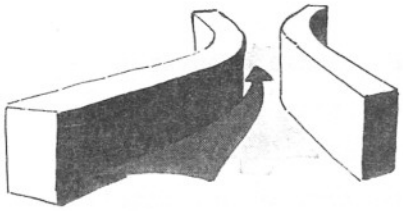

Aerodynamic nozzle

For a Venturi to function, its minimum height must be greater than 15 m (h > 5 stories). The sum of the arm lengths must be at least 100 m, and the upstream and downstream portions of the latter must be "free" of all construction over an area of the same order of magnitude as that occupied by the collector.

When the Venturi orifice width is 2 to 3 times the average height (critical width), the maximum flow clears the opening and, for structures 25 to 30 m high, the parameter ψ reaches 1.3 and 1.6 for buildings some 50 m high.

Curved shapes in a Venturi configuration increase the phenomenon by their profiling, and if the collector is prolonged by a diverging element, we have essentially an aerodynamic nozzle. In the latter case, for building heights of 50 m or so, the comfort parameter, ψ, is 2.

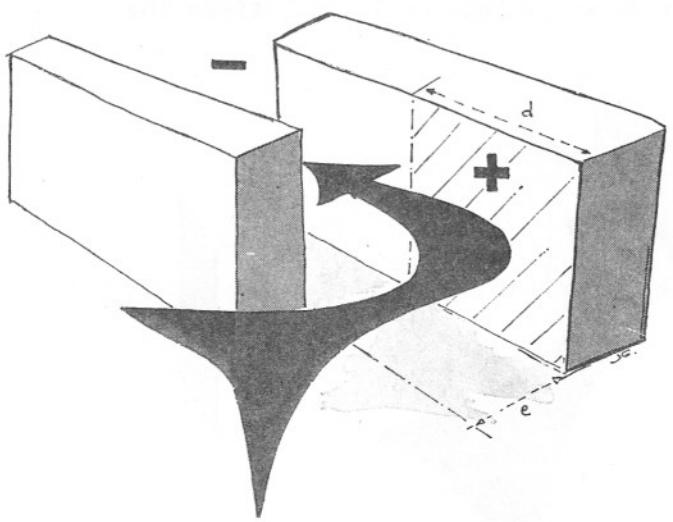

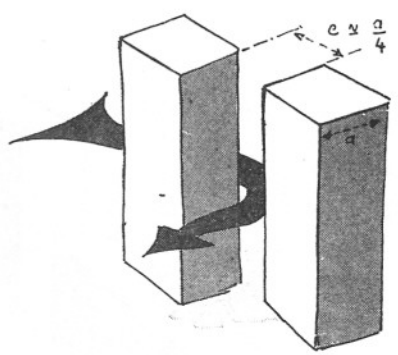

Joining of Different Pressure Zones

Wind develops an overpressure on the upstream side of an obstacle and a low-pressure zone behind it. For buildings arranged orthogonally to the wind and located in fives, the different-pressure air masses connect transversally and, further, flows appear (in the direction of decreasing pressure). This anomaly is especially important when there is a joining corridor or a well defined canalization.

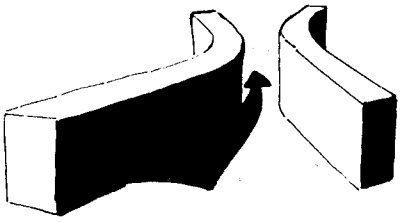

Aerodynamic nozzle

For a Venturi to function, its minimum height must be greater than 15 m (h > 5 stories). The sum of the arm lengths must be at least 100 m, and the upstream and downstream portions of the latter must be "free" of all construction over an area of the same order of magnitude as that occupied by the collector.

When the Venturi orifice width is 2 to 3 times the average height (critical width), the maximum flow clears the opening and, for structures 25 to 30 m high, the parameter ψ reaches 1.3 and 1.6 for buildings some 50 m high.

Curved shapes in a Venturi configuration increase the phenomenon by their profiling, and if the collector is prolonged by a diverging element, we have essentially an aerodynamic nozzle. In the latter case, for building heights of 50 m or so, the comfort parameter, ψ, is 2.

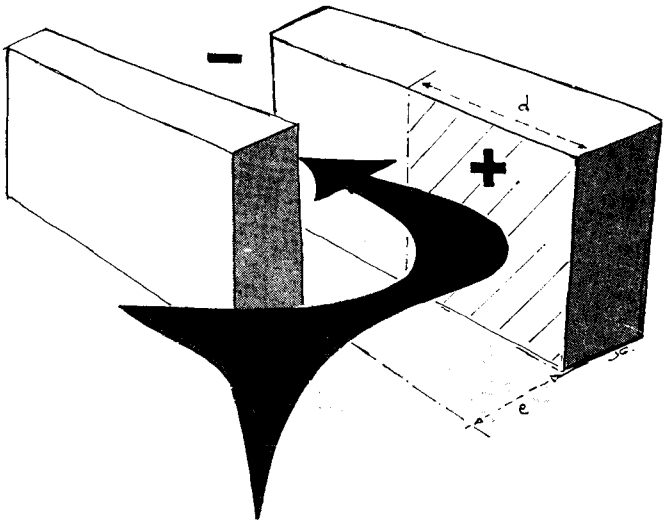

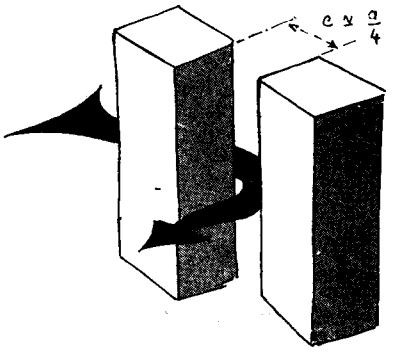

Joining of Different Pressure Zones

Wind develops an overpressure on the upstream side of an obstacle and a low-pressure zone behind it. For buildings arranged orthogonally to the wind and located in fives, the different-pressure air masses connect transversally and, further, flows appear (in the direction of decreasing pressure). This anomaly is especially important when there is a joining corridor or a well defined canalization.

For the phenomenon to be clearly present, only connections such as stepped arrangements in the direction of the wind which are the same as the average height of the structure (parallelepipeds) are critical.

This effect, the level of which is related directly to the height of the structures, takes on importance because it is developed over a large area (close to the transverse dimensions of the groups of structures).

For buildings with an average height of 15 m (5 stories), ψ may reach 1.2, and for higher structures (10 to 11 floors) the comfort parameter is between 1.3 and 1.6.

In the particular case of tall towers (30 stories), in fives and for small displacements (0.25 times the thickness of the tower), ψ values of about 1.8 have been obtained.

Structures with continually variable height, increasing or decreasing, lead to formation in the back of low-pressure "trenches" which are deeper, the higher the corresponding "rise." Therefore a flow toward the lowest pressure zone is established.

Effect of Cells

A cell is a juxtaposition of buildings of any relative heights which form an opening or a "pocket" (the number of sides is not limited) and where the opening(s) of the cell do not exceed 25% of the cell perimeter.

A cell with these dimensions (relative to those of the wind) will be totally skipped or will be penetrated by the wind (the wind "falls" into the cell). Therefore our quantitative approach to the effect of a cell involves the area of the cell, S, and its average height, h_m (m = moyen = average) as an adimensional parameter S/h_m^2. Comfort inside cells has been taken into account ("blowpipe" phenomenon therefore eliminated).

The protective effect of cells is felt for heights, such as $15\ m < h_m < 25\ m$, whatever the direction of the wind relative to the opening, so that $S/h_m^2 \lesssim 10$. The comfort parameter, ψ, is thus between 0.4 and 0.8.

When h_m is greater than 30 m, the position of the opening relative to the wind is important:

--"Closed" cell (opening is below the wind), such that $S/h_m^2 < 30$, where the average comfort parameter is 0.5 or less.

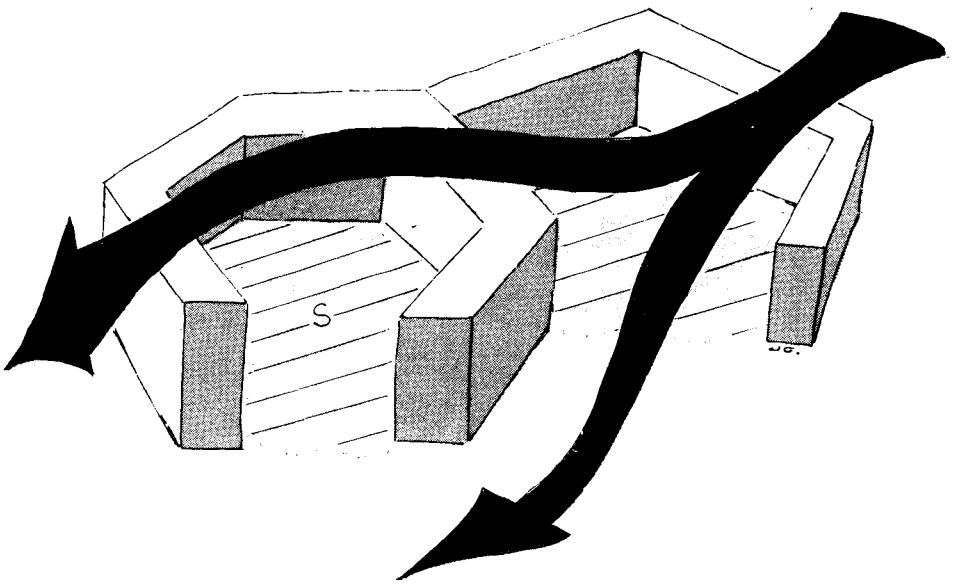

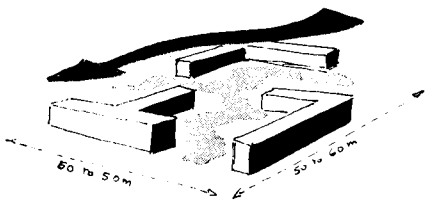

Configurations approximating cells have a protective effect.

--Open cell (opening is toward the wind or at an angle of 45°), such that $S/h_m^2 < 20$, where the comfort parameter is between 0.7 and 1.1 (total movement of air at an angle of 45°). If the opening is parallel to the wind, the parameter ψ is 1 or less

Generally, in a constructed environment any more or less well defined cell (if its height is such that h > 4 stories) involves an increase in comfort (sheltered zone) to the extent that this cell, even if coarse, has transverse dimensions of 50 to 60 m.

Effect of Slots under a Building

This anomaly concerns strictly "slots" at the base of a building which connect the windward face with its overpressure to the lee face where the pressure is lower. Practically speaking we are concerned here with passages under buildings or with buildings on supports.

Slots under buildings are more directional relative to the wind axis (critical angle: slot axis parallel to the wind) than full "pier walls" (matching the width of the building), which act as "guides."

The higher the building, the greater the discomfort level due to the effect of the lower pressure on the lee side. As long as the height is no greater than 5 stories, the phenomenon hardly occurs. However, for 7 stories the comfort parameter is 1.2 and reaches 1.5 for heights of 50 m or so (16 stories) regardless of the building length. The discomfort zone is not limited to the passages themselves but continues downstream for a distance comparable to the size of the orifice (the air is released in the form of a localized jet).

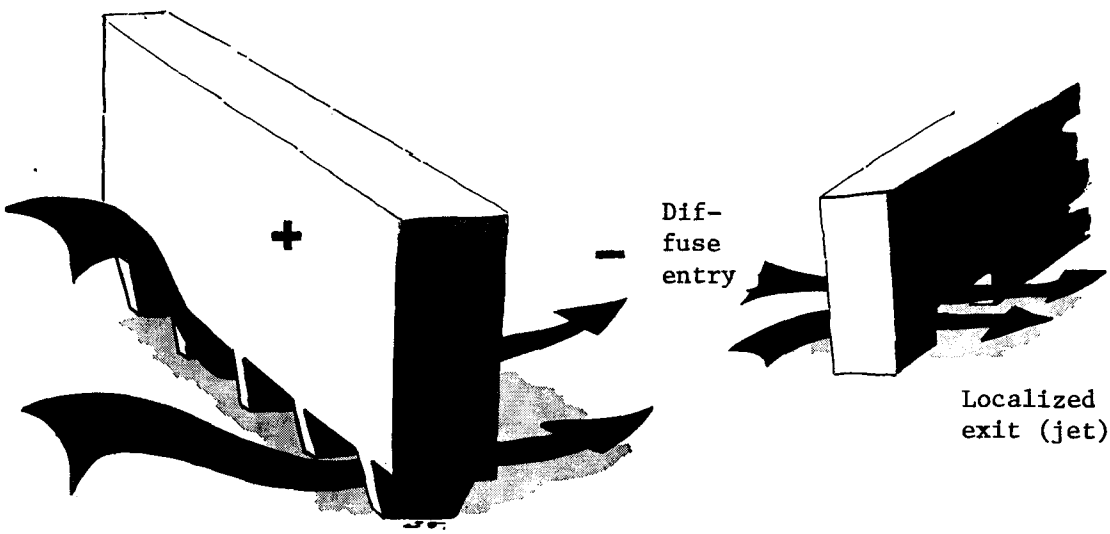

Guide wall

Effect of Corners

Here again the cause lies in the fact that zones of higher pressure on the windward face and lower pressure on the sides join at the corners of buildings.

The field affected is relatively local and exists between the side of the building or tower (where pressure is low) and a maximum space equal to the width (or thickness) of these structures.

For parallelepiped structures around 15 m high (5 stories) the comfort parameter is 1.2 and for heights greater than 35 m this level is exceeded without going higher than 1.5. In the case of a compact group of structures, the screening relative to the dimensions of the wind is greater, and the discomfort level is generally higher than in the preceding case.

A way of decreasing the corner effect is to extend the buildings by adjacent structures of decreasing height (up to 1 storv)

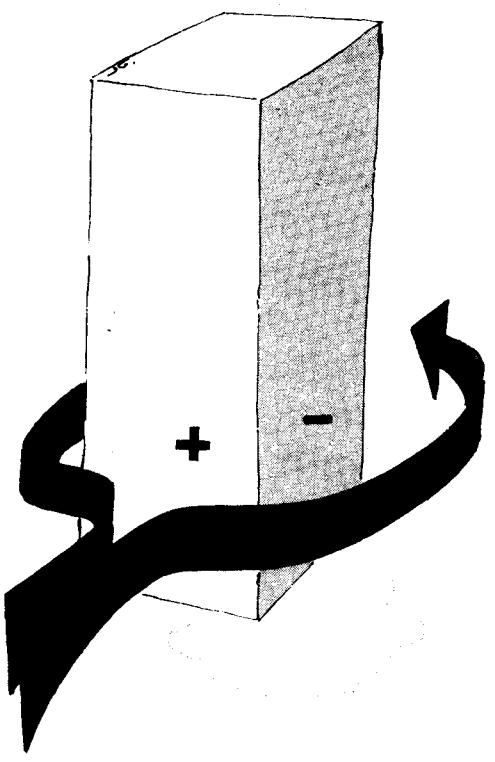

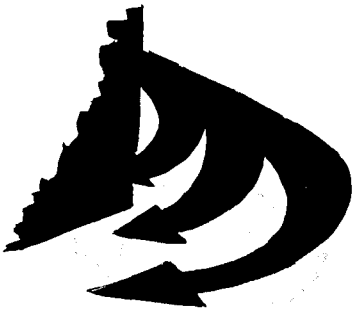

Raised horizontal gradient

and thus to permit the wind to clear the "corner" largely at some distance above the surface.

In the case of a tower between 35 and 45 m high, the parameter ψ stops at 1.4, but for very high towers (100 m average), ψ reaches 2.2. In this case there is a critical spacing of some 2 times the transverse dimension of the towers, for which the discomfort level (average about 2) is extended over the whole space between the two towers. While for spacings higher or lower than the critical the discomfort level decreases, the very tall groups are especially subject to discomfort and require particular attention by designers.

NOTE: This effect develops from very high horizontal velocity gradients.

Wake Effect

The wake of an object is created by fluid circulation behind the object between the separation lines from the edges.

Discomfort in the wake results not only from excessive speeds where zones of different pressure join but also from a strong turbulence effect caused by eddy circulation that is more or less stable and persists

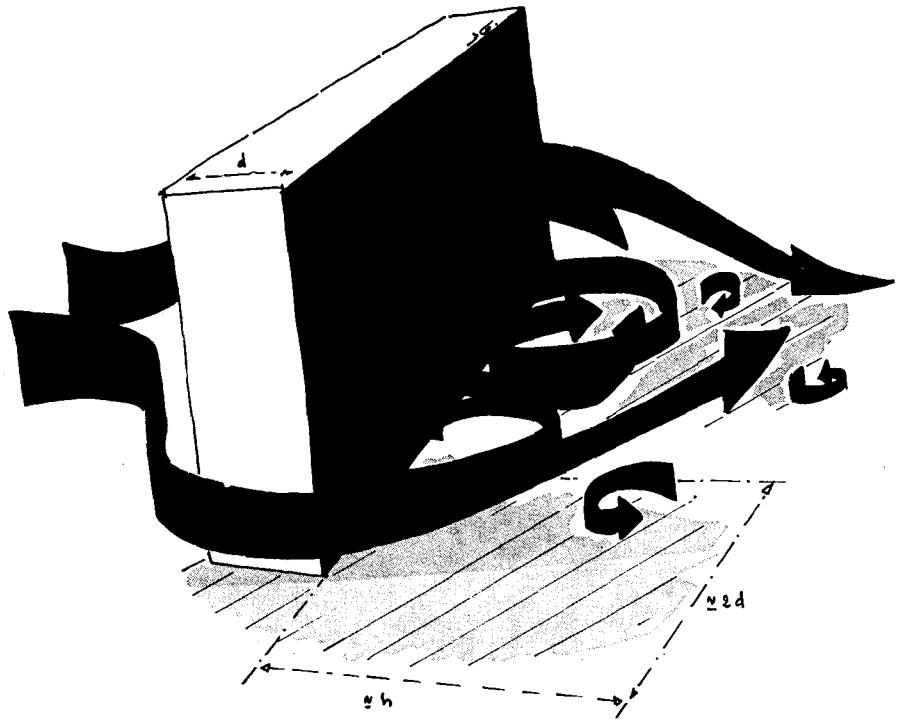

for a long time in the lee of the object. It is quite evident that the manner in which a wake can "spread out" is a direct function of the immediate environment upstream and downstream).

By definition the wake effect includes the corner effect which causes the highest discomfort levels in wakes.

Speaking generally, the comfort parameter in the structural environment varies in wakes between the following values:

--For tall buildings, 1.4 to 2.2, depending on the height (16 to 30 stories), without going below unity in the affected zone, and laterally of the same order as the thickness of the building, downstream for a distance approximately equal to the height.

--For parallelepiped buildings of 16 stories, from 1.6 to 0.5 if the overall dimensions of the object are sufficient (3 times the height). The affected zone is laterally of the order of twice the thickness of the building and downstream from 1 to 2 times the height.

Channeling Effect

A structural group forming a corridor or channel open to the sky is not a cause of discomfort per se but, when associated with an anomaly, may transmit it for its whole length. The corridor phenomenon functions much better when it is well defined (not very porous, etc.) and is relatively narrow (less than 3 times the average height of the buildings that form it). We can decrease this effect by introducing deflectors or changes in direction.

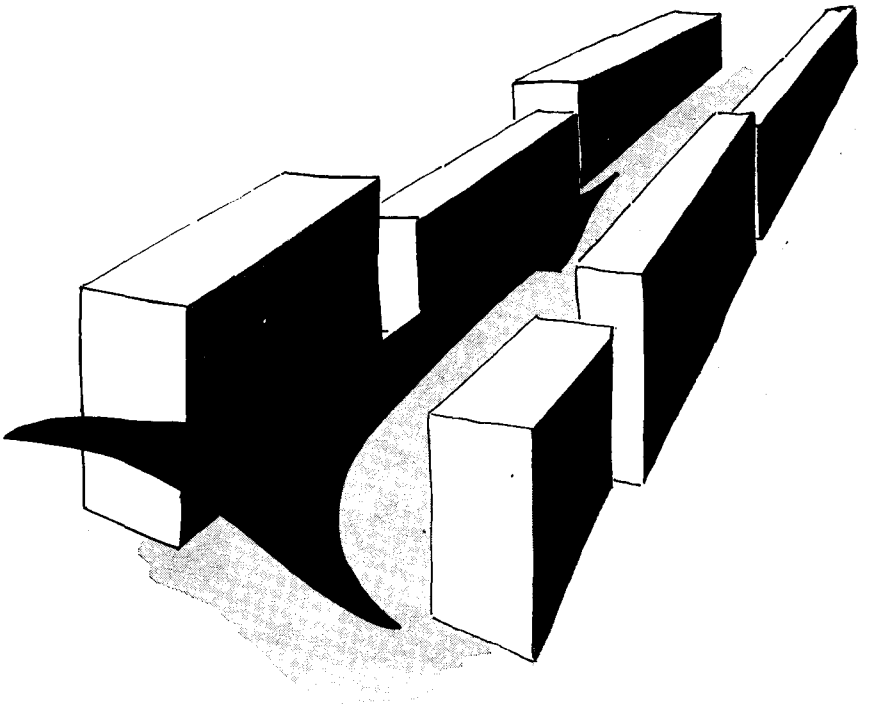

Pyramid Effect

This method of construction, by its rather aerodynamic geometry, does not offer massive resistance to the wind and, because of its surface roughness (stepped effect of stories and balconies), appears to dissipate maximum wind energy in all directions.

At the ground, the average comfort level is around 0.6 (with a large turbulence component) in a spatial plan of this type.

The critical zones are at the "composite windward corners" of the pyramidal structures, and for 13 stories the parameter ψ reaches 1.6. On balconies toward the wind, near the crests and starting at the ninth

story ψ can go beyond unity and reach 1.6 for a 17-story structure. However, it may be noted that for 80% of the balconies the comfort parameter is around 0.5.

It is quite evident that if attention is given to the two types of exposed zones mentioned above, with even a little care this method of construction is especially to be recommended.

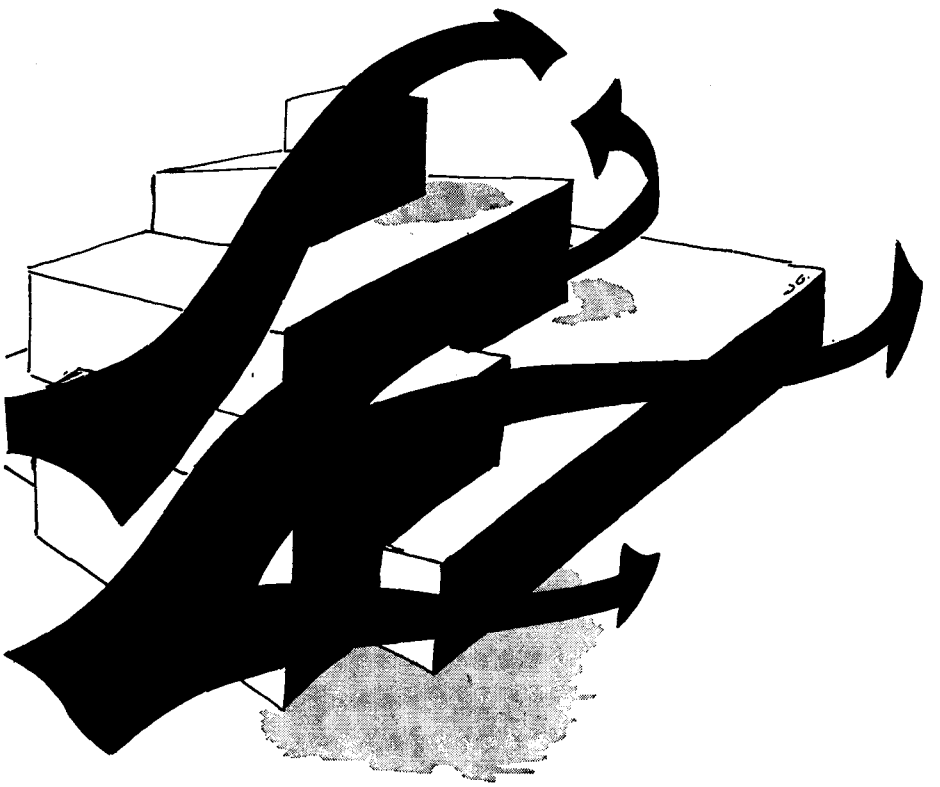

Wise Effect

A. F. E. Wise was the first to describe this effect [13]. For structures higher than 5 stories the incidence gradient causes a distribution of overpressures that differ with height on the windward face. At the base of the building a turbulent zone forms where ψ can reach 1.5 for a building some 60 m high, and even 1.8 if upstream (with incidence at right angles) a low structure (e.g. 5 stories) is located at a distance approximately equal to the height of the low structure. The arrangement of the two buildings is thus said to be "critical."

NOTE: This zone of turbulence is particularly troublesome where the local direction of flow can be vertical.

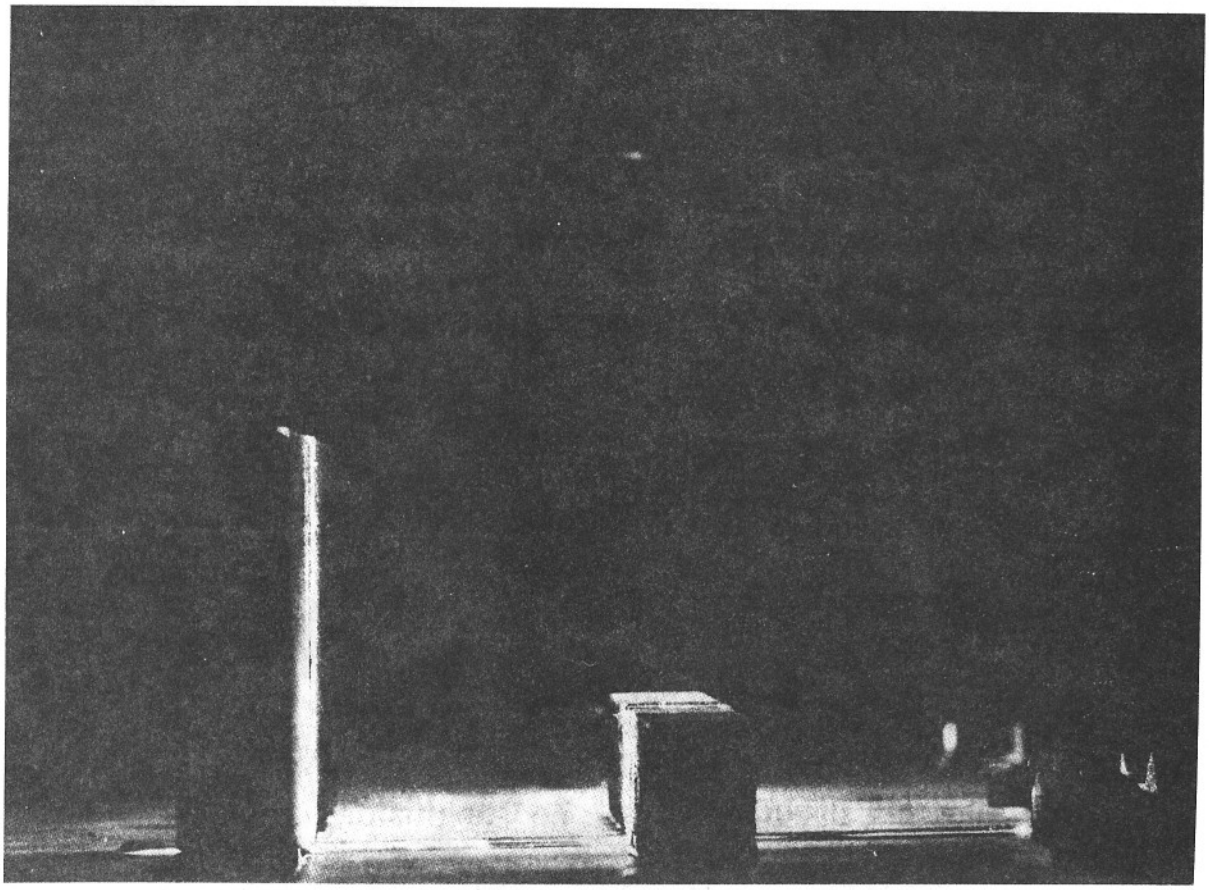

Chronophotographic visualization of Wise effect

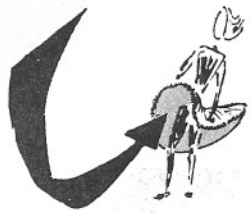

Turbulent vertical component

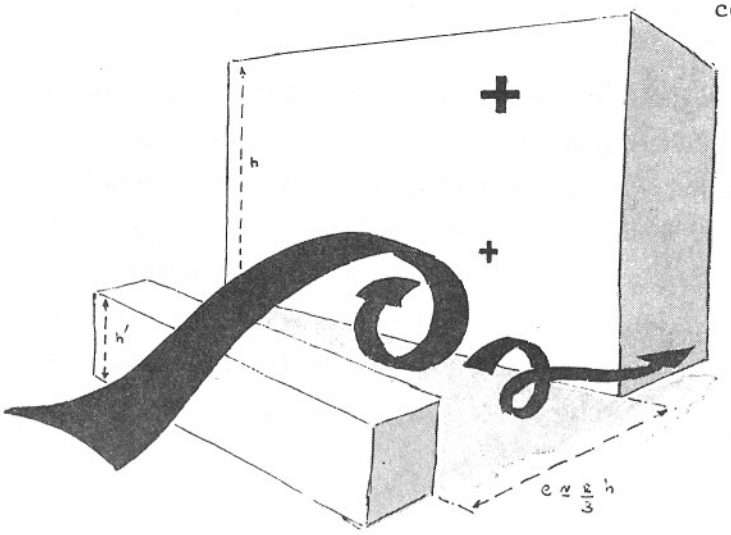

Turbulent zone at the base of a building

Figure 12

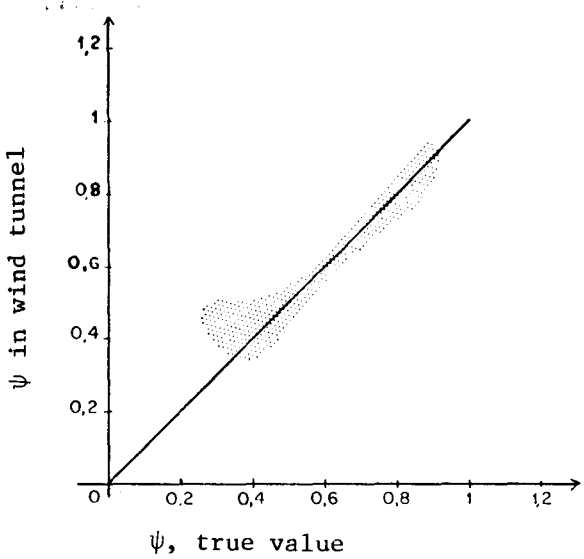

Fig. 12. Comparison of values obtained in wind tunnel and on the ground.

8. True Magnitude Study

The "old construction" sample, taking into account its installation (Nantes) and the truth of the model, allowed us to compare the results obtained in the wind tunnel with measurements on the ground and thus to confirm the quality of our test averages (Fig. 12).

On the ground, for a given wind direction (measured at the CSTB station at Nantes), the average speed (for 10 min) and the turbulence intensity were recorded simultaneously on a 7-meter pylon at a remote site (reference location) and 2 meters above the ground using a portable tripod (some 10 points).

The anemometers being very sensitive (frequency response close to 1 Hz), we could correctly measure the turbulence intensity and calculate the parameter ψ locally.

Comparison of the results with those obtained in a wind tunnel is considered excellent. We only regret that the number of points for comparison was too limited. (To compensate for this lack, a broader study is underway.)

9. Conclusion

This work allowed defining and quantifying in their structural context the different "aerodynamic accidents" that may cause discomfort to pedestrians due to effects of wind and thus how to prevent them in some cases.

It is quite evident that our quantification can be applied strictly only to an open-country wind. However, an approximate correction that takes the irregularities of the terrain into account is indicated.

Further, the comfort criterion adopted can be confirmed in the future; it is sufficient to adjust the values on the basis of the new criterion.

This type of study indicates some arrangements favorable to comfort or to decreasing the manifestations of the wind.

Finally, it was possible for us to translate this work into simple rules or practical suggestions for the use of city planners and designers [3].

The CSTB is now studying aerodynamic shapes, artificial and botanical wind screens, and also deflection arrangements at the scale of the building. These new studies will make it possible to provide architects with "after-the-fact" or "remedial" measures and will finish off the work which we have just described.

References

1. J. Gandemer, "Discomfort due to Wind at Approaches to Buildings: Aerodynamic Study of Speed Field in Building Groups," ADYM 12-73.

2. J. Gandemer and G. Narnaud, "Discomfort due to Wind at Approaches to Buildings: Aerodynamic Study of Speed Fields in Building Groups, Complementary Study." ADYM 1-75

3. J. Gandemer and A. Guyot, "Methodological Guide and Practical Plans for Including Phenomena Due to Wind in designing Urban Groupings," in preparation.

4. J. Gandemer, Cahiers du CSTB. note 141

5. C. Hautoy, "The CSTB Wind Tunnel with limited bed," ADYM 12-73.

6. C. Sacre, "Wind in the Planetary Limited Bed," CLI 10-73

[All the above references are in French]

7. N. H. Melbourne and P. N. Joubert, "Problems of Wind Flow at the Base of Tall Buildings and Structures," Tokyo 1971. Conferences on Wind Effects on Buildings and Structures.

8. T. V. Lawson, "The Wind Environment of Buildings: a Logical Approach to the Establishment of Criteria," University of Bristol, Aeronautical Department, Eng. TVL/7301, 1973.

9. A. D. Penwarden, "Acceptable Wind Speeds in Towns," Building Science, Vol. 8, No. 2, Sept. 1973.

10. J. C. R. Hunt, E. C. Poulton, and J. C. Mumford, "The Effects of Wind on People: New Criteria Based on Wind Tunnel Experiments," to be published in Building Science.

11. J. C. R. Hunt, "Wind Tunnel Experiments on the Effects of Wind on People, BRE, Sept. 1974.

12. N. Isyumov and A. G. Davenport, "The Ground Level Wind Environment in Built-up Areas," International Conference on Wind Effects on Buildings and Structures, London, Heathrow, Sept. 1975.

13. J. Gandemer, "Wind Environment around Buildings: Aerodynamic Concepts," International Conference on Wind Effects on Buildings and Structures, London, Heathrow, Sept. 1975.

14. J. Gandemer and G. Barnaud, "Simulation of Dynamic Properties of Wind by Neutral Stability in the CSTB Wind Tunnel with Limited Bed" [in French].

15. J. Gandemer and H. Maille, "Method of Quantitative Visualization Applied to the Study of Air Flow in Groups of Buildings," to be published [in French].

Appendix 1. Theoretical Expression of Conversion Coefficient

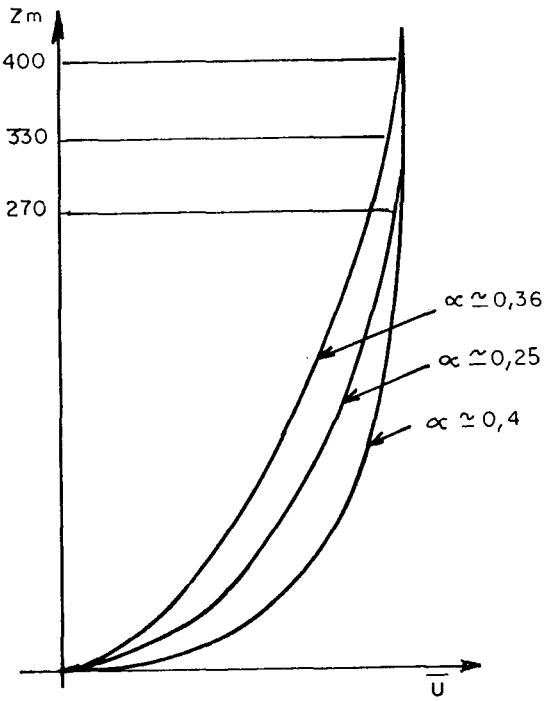

$$\overline{U}_{z_0} = k\,\overline{U}_{10\ \text{meteo}}$$

$$\overline{U}_{10\ \text{meteo}} = U_G \left(\frac{10}{270}\right)^{0,14}$$

$$\overline{U}_{z_0\,\text{sub}} = U_G \left(\frac{z_0}{330}\right)^{0,25}$$ [sub = suburb]

$$\overline{U}_{z_0\,\text{c.c.}} = U_G \left(\frac{z_0}{400}\right)^{0,36}$$ [c.c. = city center]

country site (slight irregularity) $k = \left(\frac{z_0}{10}\right)^{0,14}$

suburban site (moderate irregularity) $k = \underbrace{\left(\frac{270}{10}\right)^{0,14}}_{1,59} \left(\frac{z_0}{330}\right)^{0,25}$

city center site (great irregularity) $k = \underbrace{\left(\frac{270}{10}\right)^{0,14}}_{1,59} \frac{z_0}{400}^{0,36}$

Example:

For z_0 = 10 mètres :

Country	$k = 1$
Suburb	$k \simeq 0,66$
City center	$k = 0,42$

Appendix 2. Weighting of Quantitative Results as a Function of Geographical Site and Irregularity

We explained in Sect. 4.33 the correspondence between the comfort parameter ψ and the local frequency of exceeding the discomfort threshhold. This correspondence assumes knowledge of the specific statistical meteorological data of each site. Therefore it is essential for the designer to use the climatic data of the place if he wants to associate the ψ values for his site correctly with the frequencies of corresponding discomfort.

At the same time, if an aerodynamic anomaly of the parameter ψ obtained for a wind of the country type is located in a suburb or a city (aerodynamically thus subjected to a wind of the suburb or city type) the discomfort level and thus the associated discomfort frequency will not be the same.

We suggest below a method of weighting the value of the parameter ψ (obtained strictly for a wind of $\alpha = 0.16$) according to the nature of the irregularity met by the wind.

From the results obtained on a spatial plan (see note on p. 21) subjected to three types of wind, we found that (on the collection of points measured in the spatial plan) the parameter

$$\varphi_* = \frac{\overline{U}\,(1 + I)}{\overline{U}_{40\ \mathrm{site}}}$$

had the same average.

In attempting a better knowledge of the effect of the irregularities upstream, it seemed reasonable to use the ψ values that were found by measurement and the gradient $\alpha = 0.16$ to calculate the frequency of the discomfort for other gradients, assuming the parameter ϕ_* to be constant for any value of α.

In our calculations we adopted the following thicknesses of the limited bed for the different α values:

α	Z_G meter
0,14	270
0,16	280
0,25	330
0,36	400

For example, with $Z_r = 2$ m and $\alpha = 0.16$, we have

$$\overline{U}_r = \left(\frac{Z_r}{10}\right)^{0,16} \overline{U}_{10\,site\,0,16} = 0,72\ \overline{U}_{10\,M}$$

where $\overline{U}_{10M}$ is the average speed measured at the meteorological station ($\alpha = 0.14$).

Assuming in first approximation that the standard deviation is independent of the irregularity and the height, we can write

$$\overline{U}_r\ \ell_r \simeq \overline{U}_{10M}\ \ell_{10M} \text{ with } \ell_{10M} \simeq 0.18$$

Therefore

$$\psi = \frac{\overline{U}\ (1 + I)}{\overline{U}r\ (1 + Ir)} = \frac{\overline{U}\ (1 + I)}{0,9\ \overline{U}_{10M}}$$

or $$\overline{U}\ (1 + I) = 0,9\ \overline{U}_{10M}\ \psi$$

The parameter ϕ can be expressed

$$\varphi_* = \frac{\overline{U}\ (1 + I)}{\overline{U}_{40\ site}} = 0,9\ \frac{\overline{U}_{10M}}{\overline{U}_{40\ site}}\ \psi$$

The relation between ϕ_* and ψ for $\alpha = 0.16$ will be

$$\phi_* = 0.78\ \psi$$

Assuming that ϕ_* does not depend on α, the discomfort will start when

$$\overline{U}(1 + \ell) = 6 \text{ m/sec}$$

or

$$\overline{U}_{10M} = \frac{6}{0,78} \times \left[\frac{\overline{U}_{10M}}{\overline{U}_{40\ site}}\right] \times \frac{1}{\psi}$$

The ratio $$\frac{\overline{U}_{10M}}{\overline{U}_{40\ site}}$$

is determined as a function of the irregularity (roughness) and we have the following conditions for the start of discomfort:

$\alpha = 0,14$	rase campagne	$\overline{U}_{10M} = \frac{6,31}{\psi}$	[open country]
$\alpha = 0,16$	campagne basse banlieue	$\overline{U}_{10M} = \frac{6,62}{\psi}$	[country, low suburb]
$\alpha = 0,25$	banlieue	$\overline{U}_{10M} = \frac{8,23}{\psi}$	[suburb]
$\alpha = 0,36$	centre ville	$\overline{U}_{10M} = \frac{11}{\psi}$	[center of city]

Thus, regardless of the region, the same discomfort frequency is reached in open country with 0.954, in suburbs with 1.254, and in the city center with 1.74 with the "4" values given in the preceding paragraph (where the wind in the country is $\alpha \simeq 0.16$).

Further, if a quantified anomaly for a country wind ($\alpha = 0.16$) locally has a value $\psi \simeq 1$, this same anomaly in a suburb will be only $0.8\ \psi$ or in the city $0.6\ \psi$. The values of ψ are always those measured for wind of country type ($\alpha \simeq 0.16$).

Theoretically the above material assumes a wind "statistically" in an established regime, i.e. an upstream distribution of irregularities that is relatively homogeneous for several kilometers.

If now we consider the effect of a change in irregularity on the comfort parameter, we can only give some general experimental conclusions:

When a country-type wind penetrates into a spatial plan, the zone of probability of aerodynamic accidents is a band of the order of 200 m thick. The discomfort levels there are those given in the study of the different anomalies of aerodynamic effect.

Beyond this band, the probability of accidents is less and we can assume roughly that events occur as though we were in a wind of the suburban type, or for a discomfort parameter of $0.8\ \psi$.

It should be mentioned, however, that this change or "mask effect" can be less for widely different structures ($h > 2\bar{h}$) above the average level (thus maintaining the ψ values without attenuation).

If open (or free) spaces with minimum area of the order of 400 x 400 m are present, the wind "falls down" into such spaces and the peripheral buildings are again exposed to a 200-m band in the direction of penetration of the wind.

By way of comment, we can indicate that tall groupings consisting half of towers do not ever produce the least mask effect (interference among themselves).

Old structures, by their high density favor the protection effects (average $\psi \simeq 0.6$ to 0.7) and the aerodynamic accident thresholds that can occur are at the base of very high structures (100 m) (installation to the rear of the spatial plan). The possible discomfort zone caused by this is roughly a circular area whose radius is equal to the height of the structure. At the very base of tower structures ($h \simeq 100$ m) the discomfort parameter can reach 1.6.

NBS-114A (REV. 11-77)

U.S. DEPT. OF COMM. BIBLIOGRAPHIC DATA SHEET	1. PUBLICATION OR REPORT NO. NBS TN 710-9	2. Gov't Accession No.	3. Recipient's Accession No.

4. TITLE AND SUBTITLE

BUILDING RESEARCH TRANSLATION:
Discomfort Due to Wind Near Buildings:
Aerodynamic Concepts

5. Publication Date March 1978

6. Performing Organization Code

7. AUTHOR(S)

J. Gandemer (S. G. Weber, Translation Editor)

8. Performing Organ. Report No.

9. PERFORMING ORGANIZATION NAME AND ADDRESS

NATIONAL BUREAU OF STANDARDS
DEPARTMENT OF COMMERCE
WASHINGTON, D.C. 20234

10. Project/Task/Work Unit No.

11. Contract/Grant No.

12. Sponsoring Organization Name and Complete Address *(Street, City, State, ZIP)*

13. Type of Report & Period Covered Final

14. Sponsoring Agency Code

15. SUPPLEMENTARY NOTES

16. ABSTRACT *(A 200-word or less factual summary of most significant information. If document includes a significant bibliography or literature survey, mention it here.)*

Flow patterns at ground level in groups of buildings result from the complex interaction between the wind (impact, average speed distribution with height, and turbulance) and the buildings themselves (shapes, sizes, arrangements, etc).

The increase in the number of very tall structures and the more or less arbitrary, with respect to wind, placing of large structures have frequently demonstrated the lack of adaptation of the structural environment to wind phenomena. Manifestation at ground level, such as zones of high speeds or eddies, make the approach to buildings uncomfortable (sometimes even dangerous) for the pedestrian.

Elimination of theses problems requires better knowledge of air flows around structures and formulation of practical plans that the architect or city planner can use in designing larger structural units. This report summarizes work carried out at the CSTB institute in Nantes in 1973 and 1974 and gives the main results of the study.

A guide is included which furnishes simple rules or practical advice that can be used by architects and city planners.

17. KEY WORDS *(six to twelve entries; alphabetical order; capitalize only the first letter of the first key word unless a proper name; separated by semicolons)*

Air flow; CSTB; discomfort, wind; France; translations; wind discomfort; wind flow around buildings.

18. AVAILABILITY [X] Unlimited

[ ] For Official Distribution. Do Not Release to NTIS

[X] Order From Sup. of Doc., U.S. Government Printing Office Washington, D.C. 20402, SD Stock No. SN003-003

[ ] Order From National Technical Information Service (NTIS) Springfield, Virginia 22151

19. SECURITY CLASS (THIS REPORT) UNCLASSIFIED

20. SECURITY CLASS (THIS PAGE) UNCLASSIFIED

21. NO. OF PAGES 48

22. Price $ 1.60

Waste Heat Management Guidebook

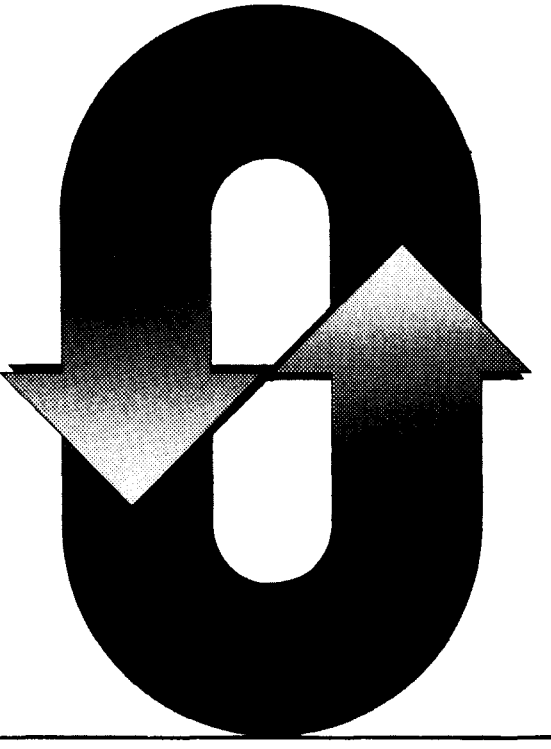

A typical plant can save about 20 percent of its fuel—just by installing waste heat recovery equipment. But with so much equipment on the market, how do you decide what's right for you?

Find the answers to your problems in the *Waste Heat Management Guidebook*, a new handbook from the Commerce Department's National Bureau of Standards and the Federal Energy Administration.

The *Waste Heat Management Guidebook* is designed to help you, the cost-conscious engineer or manager, learn how to capture and recycle heat that is normally lost to the environment during industrial and commercial processes.

The heart of the guidebook is 14 case studies of companies that have recently installed waste heat recovery systems and profited. One of these applications may be right for you, but even if it doesn't fit exactly, you'll find helpful approaches to solving many waste heat recovery problems.

In addition to case studies, the guidebook contains information on:

- sources and uses of waste heat
- determining waste heat requirements
- economics of waste heat recovery
- commercial options in waste heat recovery equipment
- instrumentation
- engineering data for waste heat recovery
- assistance for designing and installing waste heat systems

To order your copy of the *Waste Heat Management Guidebook*, send $2.75 per copy (check or money order) to Superintendent of Documents, U.S. Government Printing Office, Washington, D.C. 20402. A discount of 25 percent is given on orders of 100 copies or more mailed to one address.

The *Waste Heat Management Guidebook* is part of the EPIC industrial energy management program aimed at helping industry and commerce adjust to the increased cost and shortage of energy.

U.S. DEPARTMENT OF COMMERCE/National Bureau of Standards
FEDERAL ENERGY ADMINISTRATION/Energy Conservation and Environment

There's a new look to... DIMENSIONS/NBS

. . . the monthly magazine of the National Bureau of Standards. Still featured are special articles of general interest on current topics such as consumer product safety and building technology. In addition, new sections are designed to . . . PROVIDE SCIENTISTS with illustrated discussions of recent technical developments and work in progress . . . INFORM INDUSTRIAL MANAGERS of technology transfer activities in Federal and private labs. . . DESCRIBE TO MANUFACTURERS advances in the field of voluntary and mandatory standards. The new DIMENSIONS/NBS also carries complete listings of upcoming conferences to be held at NBS and reports on all the latest NBS publications, with information on how to order. Finally, each issue carries a page of News Briefs, aimed at keeping scientist and consumer alike up to date on major developments at the Nation's physical sciences and measurement laboratory.

(please detach here)

SUBSCRIPTION ORDER FORM

Enter my Subscription To DIMENSIONS/NBS at $12.50. Add $3.15 for foreign mailing. No additional postage is required for mailing within the United States or its possessions. Domestic remittances should be made either by postal money order, express money order, or check. Foreign remittances should be made either by international money order, draft on an American bank, or by UNESCO coupons.

☐ Remittance Enclosed **(Make checks payable to Superintendent of Documents)**

☐ Charge to my Deposit Account No.

Send Subscription to:

NAME-FIRST, LAST

COMPANY NAME OR ADDITIONAL ADDRESS LINE

STREET ADDRESS

CITY | STATE | ZIP CODE

PLEASE PRINT

MAIL ORDER FORM TO:
Superintendent of Documents
Government Printing Office
Washington, D.C. 20402

☆ U.S. GOVERNMENT PRINTING OFFICE: 1978—261-238/30